[redacted]

[redacted]

Copy #1

4.5.4.2

CLASSIFICATION CHANGE

To UNCLASSIFIED
By authority of GSI - EO 11652 GP-4
Changed by O. L. Merrill Date 12/31/72
Classified Document Master Control Station, NASA
Scientific and Technical Information Facility

APOLLO QUARTERLY PROGRESS REPORT
(U)

APRIL - JUNE 1962

SID 62-400-2

~~AVAILABLE TO NASA HEADQUARTERS ONLY~~

~~This document contains information affecting the national defense of the [redacted] manner to an [redacted] graded at 3 year intervals; declassified after 12 years; DOD DIR 5200.1[redacted]~~

NORTH AMERICAN AVIATION, INC.
SPACE and INFORMATION SYSTEMS DIVISION

[redacted]

FOREWORD

On 28 November 1961, Space and Information Systems Division of North American Aviation was informed that it had been selected as the principal contractor for the Project Apollo Spacecraft.

Apollo Letter Contract NAS 9-150 was executed on 21 December 1961. For program planning purposes, a go-ahead date of 1 January 1962 was established.

Based upon the Project Apollo Spacecraft Development Statement of Work, 26 separate areas of effort have been defined. This report reflects the progress made in these areas during the second three months (i.e., April through June 1962) of program activities.

CONTENTS

Section		Page
	INTRODUCTION	1
I	PROGRESS SUMMARY	3
	FLIGHT TECHNOLOGY	3
	INTEGRATION AND SYSTEM ANALYSIS	27
	RELIABILITY	33
	INSTRUMENTATION	43
	TRAINING AND SIMULATION	45
	SPACECRAFT TEST OPERATIONS—DOWNEY	49
	DOCUMENTATION	57
	PROGRAM MANAGEMENT	65
	STABILIZATION AND CONTROL	77
	CREW PROVISIONS	83
	LAUNCH ESCAPE SYSTEM (LES)	89
	ENVIRONMENTAL CONTROL SYSTEMS	93
	EARTH LANDING SYSTEM	95
	COMMUNICATION SYSTEM	99
	NAVIGATION AND GUIDANCE	103
	COMMAND MODULE STRUCTURE AND SUBSYSTEM INSTALLATION	111
	SERVICE PROPULSION SYSTEM	121
	SERVICE MODULE STRUCTURE AND SUBSYSTEM INSTALLATION	125
	ELECTRICAL POWER SYSTEM	129
	REACTION CONTROL SYSTEM (RCS)	133
	SPACECRAFT ADAPTER DESIGN	137
	SPACECRAFT GROUND SUPPORT EQUIPMENT	139
	GROUND OPERATIONAL SUPPORT SYSTEM	145
	FACILITIES	147
II	MILESTONE SUMMARY	163
	APOLLO PROGRAM SCHEDULE STATUS	163
III	ANALYSIS DATA	167
	FLIGHT TECHNOLOGY	167
	Apollo Wind Tunnel Program	167
	Entry Flight System	167

[redacted]

Section

	Page
Heat Transfer	172
Boost Flight System	172
Launch Escape System (LES)	175
Wind Tunnel Test Program	175
Aerodynamics	179
Flight Dynamics	191
Performance and Trajectories	197
Aerothermodynamics	207
Heat Transfer Analysis	215
Environmental Control Systems (ECS) Analysis	225
Nuclear Radiation and Shielding	252
Power Systems Analysis	252
Discussion	258
Propulsion System Analysis	261
INSTRUMENTATION	287
Controls and Displays	287
TV Displays	287
Time Display	287
Main Display Console	287
STABILIZATION AND CONTROL	289
Preliminary Definition of the Required Stabilization and Control (SCS) Operating Modes	289
Entry Stabilization and Control System	289
Preprogrammed Pulse System (System A)	298
Limit Cycle Behavior	301
Test	304
CREW PROVISIONS	305
Flight Controls and Displays	305
Cabin Interior and Crew Station Arrangement	305
Cabin Interior Arrangement Mock-Up	306
Lighting	307
Life Systems Mock-Up Activity	307
Crew Couch Design	307
Personal Equipment	307
Food Management and Water Supply	308
Waste Management	308
Crew Analysis	308

[redacted]

Section

Page

Simulation and Test 309
Ground Support 309
Problem Areas 309
Laboratory Support 310

LAUNCH ESCAPE SYSTEM (LES) 311
Configuration 311
Tower Structure 311
Aft Skirt 311
Jettison Motor 312
Nose Cone 312
Rocket Motors 312
Laboratory Support—Producibility and Structural Tubing Material 319

ENVIRONMENTAL CONTROL SYSTEM (ECS) 321
Testing 321
Mock-Ups 324
Pressure and Temperature Control 324
Water-Glycol Loop 326
Water Management 328
Supercritical Gas Storage System 330
Waste Management 330

COMMUNICATION SYSTEM 337
Measurement Requirements 337
Optical Equipment 338
Central Timing Equipment (Clock) 342
Data Handling Equipment 342
PCM Telemetry Equipment 342
Data Storage Equipment 351
VHF Circuit Margins 351
Lunar Excursion Module Interface Requirements . . 354
Antennas 363
Boilerplate Equipment Status 371

COMMAND MODULE STRUCTURE AND SUBSYSTEM INSTALLATION 373
Outer Structure 373
Crew Access Hatch 377
Air Lock and Docking 378
Mock-Ups 386

[redacted]

Section Page

SERVICE PROPULSION SYSTEM 401
Propellant System 401
Rocket Engine 404
Mock-Up 414
Laboratory Support 414
Metal Seals 414
Cleaning and Purging 415

SERVICE MODULE AND SUBSYSTEM INSTALLATION . . . 417
Structural Configuration 417
Propellant Tanks 420
Adapter 420
Radial Webs 421
Lower Bulkhead 421
Engine Mount Structure 421
Upper Bulkhead 421
Outer-Shell Panels 422
Boilerplates 422
System Support 423
Command Module to Service Module Separation System 425
Service Module to Adapter Separation System . . 425
Test. 425
Deep Space Instrumentation Facilities (DSIF) Antenna Development System 426
Weight Control 427
Mock-Up. 427
Lubricants 427
Space Radiators 427
Pyrotechnic Devices - Mechanical Systems . . . 427

ELECTRICAL POWER SYSTEM 429
System Analysis and Evaluation 429
Fuel Cell Test Plan 429
Fuel Cell Heat Rejection Study 429
Cryogenic Fluid Requirements and Utilization . . 430
Power Distribution 430
Sequencer 434
Pyrotechnics 434
Launch Escape Subsystem (LES) 434
Electrical Power Subsystems 435

[redacted]

Section

Page

REACTION CONTROL SYSTEM (RCS) 437
Propellant System 437
Breadboard Development Testing 442
Reaction Control System Mock-Up 442
Engines 443

GROUND OPERATIONAL SUPPORT SYSTEM 449
Documentation 449
Operations Analysis Effort 449
Goss Laboratory 450
Reflectivity Study. 450

APPENDIX
COMMAND MODULE MOCK-UP PHOTOGRAPHS . . . 451

[redacted]

[redacted]

ILLUSTRATIONS

Figure		Page
1	Apollo Wind Tunnel Program—Status Summary	168
2	The 0.055-Scale Transient Pressure Model PSTL-1, Installed in NAA Trisonic Wind Tunnel	173
3	The 0.045-Scale Heat Transfer Model of the S/M + C/M + LES Configuration	174
4	Wind Tunnel Test Summary—Launch Escape System Force Tests	176
5	NAA Trisonic Installation of LES Model FS-2 with Flow Separator (DM = 2.5)	177
6	Installation of 0.002-Scale Model FS-1 NAA SAL Tunnel with Curved Solid Plumes	178
7	Static Longitudinal Characteristics of Command Module at Entry Mach Numbers	180
8	Command Module Variation of Damping in Pitch with Angle of Attack	182
9	Static Longitudinal Aerodynamic Characteristics of the Command Module at Recovery Mach Numbers	184
10	Effect of Flow Separator Geometry on Launch Escape System Stability Characteristics	185
11	Effect of Rocket Motor Operation on Launch Escape System Pitching Moment Coefficient	187
12	Bending of Escape Rocket Exhaust Jets	188
13	Thrust Coefficient Simulation	189
14	Simulation Parameters—Jet Effects Model	190
15	Entry Vehicle Control System	192
16	Drogue Parachute Deployment and Operating Envelope	194
17	Engine Tolerance Envelope for Tumbling	196
18	Configuration Summary	198
19	Lunar Excursion Module and Service Module Performance Trade-Off	200
20	Weights and ΔV's for Direct Lunar Landing	201
21	Effects of Entry Corridor and Flight Mode on Heating Parameters	206
22	A Comparison of Predicted and Measured Convective Heat Transfer Rates on the JPL Test Model	209
23	Bow Shock Wave at Mach Number 6.09—JPL Test	210

[redacted]

Figure		Page
24	Preliminary Estimate of Escape Tower Truss Member Temperature as Function of Ablative Thickness for No-Exhaust Particle Impingement	216
25	Heating of Antenna Dome During Boost Trajectory	217
26	Maximum Heating Rate at Base of Antenna Dome—60 Seconds After Start of Reentry	218
27	Total Heat Input at Base of Antenna Dome During Reentry	219
28	Schematic Diagram of Service Module Components	222
29	Flow Diagram	226
30	Water Quantity Time History—Lunar Landing Mission	228
31	Water Quantity Time History—Lunar Orbit Mission	229
32	Boilerplate Internal Temperatures During Prelaunch	230
33	Cooling System for Unmanned Spacecraft	232
34	Suit Circuit Conditions	233
35	Pressure Suit Circuit Compressor	239
36	Metabolic Rate Versus O_2 Consumption, CO_2 Production	241
37	Air Lock Dump and Pressurization Time as a Function of Inlet or Outlet Diameter.	243
38	Command Module Pressure Decay for Various Hole Sizes	244
39	Single Coldplate Analysis—Surface Temperature	246
40	Coldplate Network	247
41	Coldplate Interface Conductance Test Setup—Schematic	248
42	Coldplate Interface Conductance Test Setup—Photograph	249
43	Test Sample in Place, Insulated Top and Bottom	250
44	Equipment Base-To-Coldplate Interface Conductance Tests	251
45	ECS Radiator—Rejection Capability Versus Time	256
46	Service Propulsion Propellant Pressurization System	262
47	Service Module Main Propulsion System	263
48	Service Module Main Propulsion System—Pressure Drop Versus Line Size	267
49	Service Module Reaction Control System—Pressure Drop in Propellant Lines	268
50	Command Module Reaction Control System—System-A Schematic	270
51	Command Module Reaction Control System—Pressure Drop in Oxidizer Feed System A	271
52	Command Module Reaction Control System—Pressure Drop in Fuel Feed System A	273
53	Predicted Surge Pressure	275
54	Command Module Reaction Control System Thrust Chamber	277
55	Optimization Study	280
56	Jet Wake Envelope and Temperature Profile	281

[redacted]

Figure		Page
57	Service Module Surface Impingement	282
58	Apollo Integrated Optical Display—Block Diagram	288
59	Proposed Control System Inner Loop—Block Diagram	294
60	Convergence Paths for Step Rate Command: a = 0.562, b = 0.712	295
61	Proposed Entry Vehicle Control System—Block Diagram	297
62	Switching Lines—System A	299
63	Rate Diagram—System A	300
64	Switching Lines—System B	302
65	Rate Diagram—System B	303
66	Apollo Launch Escape Motor—Predicted Sea Level Performance	314
67	Tower Jettison and Launch Escape Motor—Scarfed Nozzle Design	315
68	Scarfed Nozzle Firing—Post-Test Appearance	316
69	Apollo Tower Jettison Motor—Predicted Sea Level Performance	317
70	Environmental Control Package—Front View	322
71	Environmental Control Package—Rear View	323
72	Suit-Cabin Circuit—Functional Diagram	325
73	Coolant Loop—Functional Diagram	327
74	Water Management—Functional Diagram	329
75	Supercritical Gas Storage System Schematic	331
76	Urine Disposal	332
77	Waste Management System Control Panel	333
78	Urine Disposal Configuration	334
79	Waste Management System Schematic	336
80	RCA Analog TV System	341
81	Raytheon Digital TV System	341
82	Suggested Scenes for Subjective Evaluation	343
83	Proposed Method for Televising Astronauts	344
84	Television Viewing Through Fiber Optic Bundle	345
85	PCM Telemetry Equipment	347
86	PCM Telemetry Format	348
87	Bit-Rate Actuator	350
88	Bit-Rate Controller	352
89	Data Storage Equipment	353
90	Four-Element Comparator with Four Receivers	358
91	Typical FPS-16 Range Tracking Error Versus S/N Ratio	359
92	Circuit Margin Versus θ for a Four-Element Comparator	362
93	The 2KMC Omni Slots on the Disc of the Discone Antenna	364

[redacted]

Figure		Page
94	Radiation Pattern of DSIF Antenna: E-Plane Logarithmic Plot	365
95	Radiation Pattern of DSIF Antenna: H-Plane Logarithmic Plot	366
96	Command Module: 1/3-Scale Model	369
97	Command Module and Tower: 1/3-Scale Model	370
98	Aft Heat Shield Weight Comparison	375
99	Inner Cabin Floor.	376
100	Docking System A	380
101	Docking System B	381
102	Crew System Impact Attenuation	383
103	Airframe System Impact Attenuation	384
104	Strut System Materials—Development Program	385
105	Command Module Mock-Up 9	387
106	Mock-Up 7	391
107	Service Module Mock-Up 4	394
108	Service Module Mock-Up 9	396
109	Handling and Transportation Mock-Up 9	397
110	Adapter Mock-Up 9	398
111	Partial Adapter Mock-Up 4	399
112	Pressurization System	402
113	Center of Gravity Excursion	403
114	Estimated Specific Impulse Versus Mixture Ratio	405
115	Estimated Thrust and Specific Impulse Versus Engine Firing Time	407
116	Estimated Chamber Pressure and Propellant Flow Rate Versus Engine Firing Time	408
117	Estimated Start—Transient Chamber Pressure Versus Time	409
118	Estimated Shutdown—Transient Chamber Pressure Versus Time	410
119	Electro-Mechanical Gimbal Actuator System.	411
120	Service Module Configurations	418
121	Service Module Basic Structure	419
122	Service Module Equipment Installation	424
123	DC Distribution System	431
124	AC Distribution System	432
125	Battery Control System	433
126	Command Module Reaction Control System—Schematic Diagram	438
127	Quadruple Reaction Control System—Positive Explusion, No Interconnect	439

[redacted]

Figure		Page
128	Dual Reaction Control System—Positive Expulsion, Interconnects	440
129	Rocket Engine Installation—Attitude and Stabilization Control	444
130	Semiradiation-Cooled Engine	446
131	Reentry Convective Heat Transfer	447

[redacted]

TABLES

Table		Page
1	Subcontractor Funding	75
2	Apollo Meetings, Second Quarter 1962	151
3	Apollo Program Schedule Comparison	164
4	Milestone Status Report	165
5	Aeroheating Wind Tunnel Test—JPL 21-Inch Hypersonic Wind Tunnel Test Conditions	181
6	Characteristic Velocities—Lunar Equatorial Plane (100 Percent of Month)	199
7	Minimum Characteristic Velocities (100 Percent of Month)	202
8	Earth-Orbited Weights for a 100-Nautical-Mile Orbit	204
9	Entry Flight Mode Effects on Entry Range, Range Errors, and Heating Parameters	205
10	Summary of Entry Heating Parameters	213
11	Cabin Wall Temperature Due to Pressure Failure	221
12	Minimum Expected Temperatures (F) for Various Insulation Thicknesses (Translunar Mission)	223
13	Minimum Expected Temperatures (F) for Various Insulation Thicknesses (Lunar Night Mission)	224
14	Minimum Expected Temperatures (F) for Various Insulation Thicknesses (Translunar Mission)	224
15	Minimum Expected Temperatures (F) for Various Insulation Thicknesses (Lunar Night Mission)	225
16	Power Requirements for Gas Storage Tank Pressure Build-Up	253
17	Gas Storage Tank Dimensions	254
18	Gas Flow Data for Storage System Malfunctions	255
19	Maximum Fuel Temperatures Due to Reentry Heating	276
20	Plume Properties at Five Locations Downstream of the Nozzle Axis	284
21	Possible Values of Dynamic Variables	292
22	Preliminary Characteristics of the Tower Jettison Motor and Launch Escape Motor	318
23	Total Measurement and Bit Rates per Phase	337
24	Central Timing Equipment Time Code and Synchronization Outputs	346
25	Typical Measurement Sampling Format	349

[redacted]

Table | | Page

26	Cislunar Communication Modes and Parameters With Analog Television Transmission	355
27	Theoretical and Practical Comparison of Single Channel Modulation Technique	357
28	Spacecraft to Radar Quality Chart	360
29	Operating Time and Energy Requirements for Recommended Radio Recovery Aids	363
30	Recommended Recovery Antennas	367
31	Performance Requirements	412

[redacted]

INTRODUCTION

This report is presented in three sections: Progress Summary, Milestone Summary, and Analysis Data. The first section briefly covers progress made in the general-order areas during the second quarter of 1962. The second section presents an Apollo program schedule comparison and a milestone status report, which includes projected third-quarter milestone completion dates. The third section treats in detail areas of progress requiring greater explanation than that given in the Progress Summary and includes tables and illustrations to supplement the text.

[redacted]

I PROGRESS SUMMARY

FLIGHT TECHNOLOGY

WIND TUNNEL PROGRAM

Fifteen tests were completed during this period. These included seven static force tests, two dynamic stability tests, one transient pressure test, three aerodynamic load tests, and two heat transfer tests. Data were obtained for the entry configuration, several launch escape configurations, and for the boost configuration in the subsonic to hypervelocity range. Eight pretest reports and nine data reports were published. Data published consisted of a tabular listing of either static or dynamic stability coefficients, pressure coefficients, or heat transfer rates.

AERODYNAMICS

Aerodynamic characteristics of the command module and launch escape system (LES) were prepared for performance and control studies. Mach numbers from 0.7 to hypersonic are included.

Studies of the effects of various flow separators on the static stability of the LES were completed. Significant improvements are obtained with a disc mounted forward of the exhaust nozzle fairing.

Preliminary estimates of the jet effects of the LES were completed. A study of the interaction between the free stream and the jet was initiated.

Design requirements were established, and the preliminary design of the hydrogen peroxide rocket for escape motor simulation was completed.

During the next period, dynamic stability studies will be extended through analysis of hypersonic data obtained in decaying oscillation tests at JPL and through additional forced-oscillation investigations at Langley Research Center.

Stability data for the command module with the parachute cover removed will be obtained and analyzed.

Effects of flow separators on aerodynamic buffeting will be determined for the LES tower and motor, and the final configuration selection will be selected.

Studies to estimate the effects of jet impingements on LES stability will be continued.

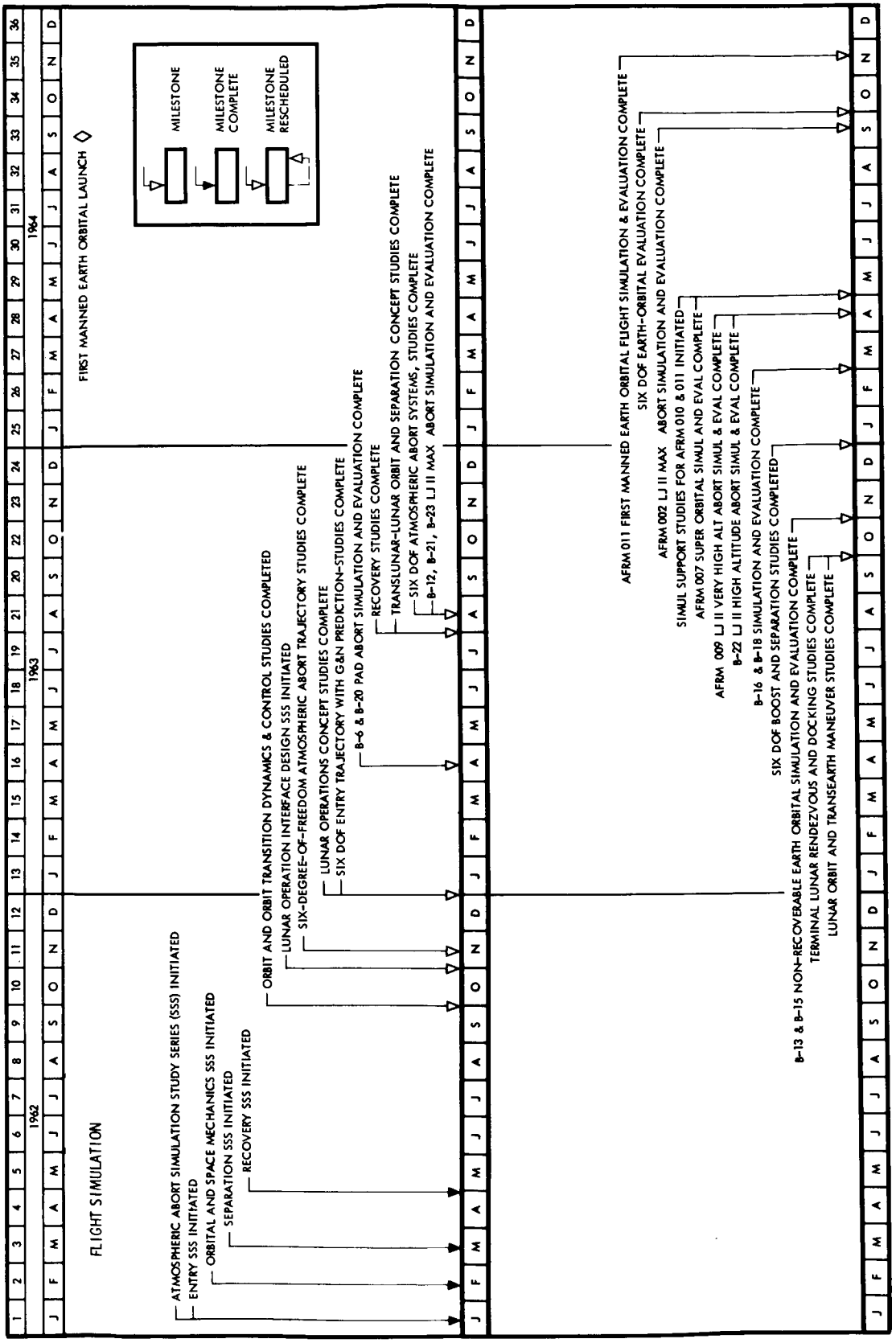
1962
1963
1964
FLIGHT SIMULATION
FIRST MANNED EARTH ORBITAL LAUNCH ◇
MILESTONE
MILESTONE COMPLETE
MILESTONE RESCHEDULED
ATMOSPHERIC ABORT SIMULATION STUDY SERIES (SSS) INITIATED
ENTRY SSS INITIATED
ORBITAL AND SPACE MECHANICS SSS INITIATED
SEPARATION SSS INITIATED
RECOVERY SSS INITIATED
ORBIT AND ORBIT TRANSITION DYNAMICS & CONTROL STUDIES COMPLETED
LUNAR OPERATION INTERFACE DESIGN SSS INITIATED
SIX-DEGREE-OF-FREEDOM ATMOSPHERIC ABORT TRAJECTORY STUDIES COMPLETE
LUNAR OPERATIONS CONCEPT STUDIES COMPLETE
SIX DOF ENTRY TRAJECTORY WITH G&N PREDICTION-STUDIES COMPLETE
B-6 & B-20 PAD ABORT SIMULATION AND EVALUATION COMPLETE
RECOVERY STUDIES COMPLETE
TRANSLUNAR-LUNAR ORBIT AND SEPARATION CONCEPT STUDIES COMPLETE
SIX DOF ATMOSPHERIC ABORT SYSTEMS, STUDIES COMPLETE
B-12, B-21, B-23 LJ II MAX ABORT SIMULATION AND EVALUATION COMPLETE
AFRM 011 FIRST MANNED EARTH ORBITAL FLIGHT SIMULATION & EVALUATION COMPLETE
SIX DOF EARTH-ORBITAL EVALUATION COMPLETE
AFRM 002 LJ II MAX ABORT SIMULATION AND EVALUATION COMPLETE
SIMUL SUPPORT STUDIES FOR AFRM 010 & 011 INITIATED
AFRM 007 SUPER ORBITAL SIMUL AND EVAL COMPLETE
AFRM 009 LJ II VERY HIGH ALT ABORT SIMUL & EVAL COMPLETE
B-22 LJ II HIGH ALTITUDE ABORT SIMUL & EVAL COMPLETE
B-16 & B-18 SIMULATION AND EVALUATION COMPLETE
SIX DOF BOOST AND SEPARATION STUDIES COMPLETED
B-13 & B-15 NON-RECOVERABLE EARTH ORBITAL SIMULATION AND EVALUATION COMPLETE
TERMINAL LUNAR RENDEZVOUS AND DOCKING STUDIES COMPLETE
LUNAR ORBIT AND TRANSEARTH MANEUVER STUDIES COMPLETE

The study to evaluate simulation of the LES effects by means of a cold air jet will be completed. If this method proves satisfactory, initial tests will be conducted.

The preliminary analysis of the solid plume tests will be completed, and hot jet tests will be started.

The analysis of the flow field around the command module during entry will be extended to include one-dimensional nonequilibrium effects. The Gravalos method blunt-body flow field analysis, which includes wake effects, will be started.

FLIGHT DYNAMICS

Preliminary analysis of two reentry stabilization and control systems was conducted. The basic difference between the systems is the alignment of the main sensors. It appears that an optimum system from a propellant consumption and systems response standpoint uses sensors centered along the design stability axis. Preliminary gains for these systems have been determined.

The deployment envelope for the drogue and main parachute was determined. The envelope includes conditions relating to entry from a lunar mission as well as various abort conditions. Design criteria and the operational envelope are presently being transmitted to Northrop-Ventura.

Intensive investigation of the LES was conducted. The primary effort has been toward developing an LES which does not utilize thrust vector control. Two different systems were studied, the passive system using the offset main motor and the open-loop system that contains kicker rockets. Variations in the system design parameters were considered. On the basis of preliminary results, it appears that open-loop system has some advantage over the passive technique.

During the next period, additional mission-design sizing studies will be conducted on the Saturn C-1 and service module earth-orbited payload. These will show the effects of a "universal" service module design, various module weight growth factors, V's from ephemeris data for specific months throughout a calendar year, lunar excursion module weights larger than those shown, and individual parametric trade-off partials related to weight.

Continued development of the steering program for the terminal range control will include finite roll rates, effects of the number of range corrections on terminal errors, effects of a rotating earth, application to lower entry velocities, application to emergency entry displays or procedures in

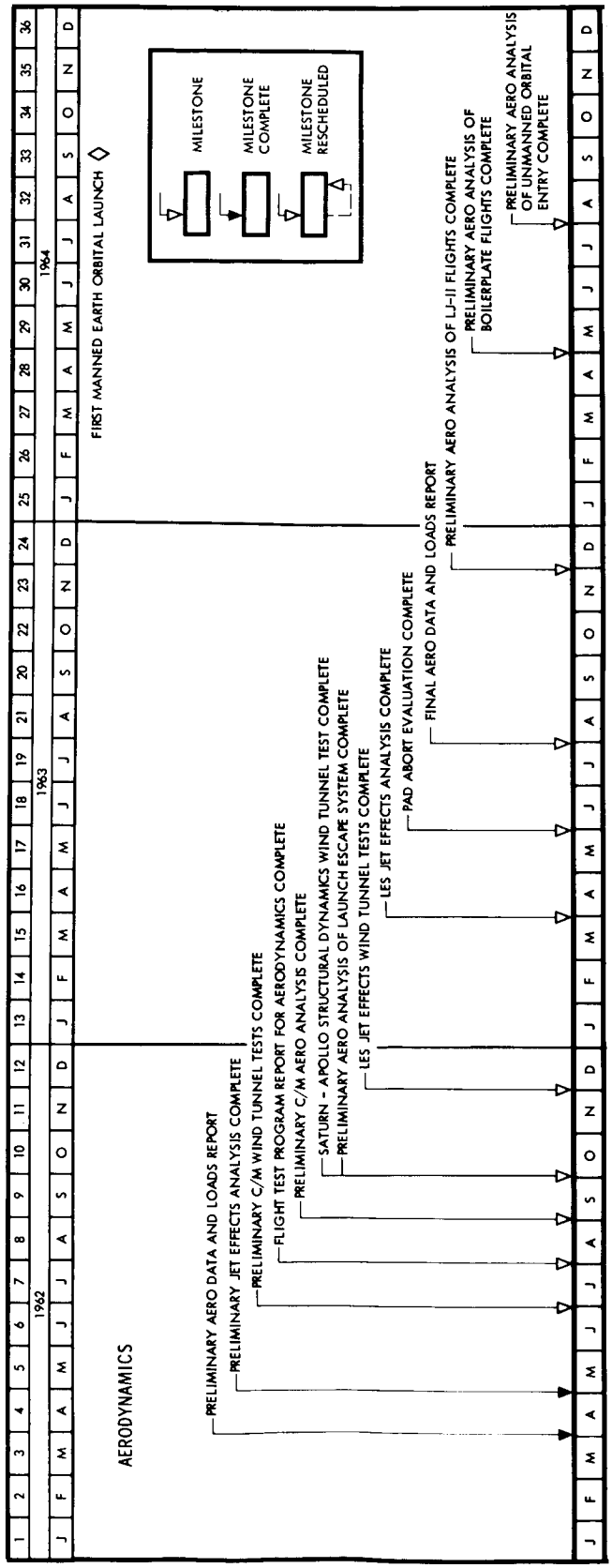
AERODYNAMICS
PRELIMINARY AERO DATA AND LOADS REPORT
PRELIMINARY JET EFFECTS ANALYSIS COMPLETE
PRELIMINARY C/M WIND TUNNEL TESTS COMPLETE
FLIGHT TEST PROGRAM REPORT FOR AERODYNAMICS COMPLETE
PRELIMINARY C/M AERO ANALYSIS COMPLETE
SATURN - APOLLO STRUCTURAL DYNAMICS WIND TUNNEL TEST COMPLETE
PRELIMINARY AERO ANALYSIS OF LAUNCH ESCAPE SYSTEM COMPLETE
LES JET EFFECTS WIND TUNNEL TESTS COMPLETE
LES JET EFFECTS ANALYSIS COMPLETE
PAD ABORT EVALUATION COMPLETE
FINAL AERO DATA AND LOADS REPORT
PRELIMINARY AERO ANALYSIS OF LJ-II FLIGHTS COMPLETE
PRELIMINARY AERO ANALYSIS OF BOILERPLATE FLIGHTS COMPLETE
PRELIMINARY AERO ANALYSIS OF UNMANNED ORBITAL ENTRY COMPLETE
FIRST MANNED EARTH ORBITAL LAUNCH
MILESTONE
MILESTONE COMPLETE
MILESTONE RESCHEDULED
1962
1963
1964

the event of system malfunctions, and the feasibility of a linear statistical analysis to determine the effects of sensing errors on range-prediction accuracy.

Space dynamics work will continue in the establishment of service module reaction jet thrust level and propellant requirements. An investigation will be conducted to determine the effects of propellant slosh and structural dynamics on service propulsion gimbal actuator requirements and system response.

PERFORMANCE AND TRAJECTORIES

Trajectory analyses were extended during the last period. Additional detail was generated concerning the interrelationships between mission flexibility and trajectory constraints and service module design considerations. Entry trajectories affecting heat shield design and entry corridor requirements were investigated.

Performance trade-off studies were conducted for the universal service module. This module is equally capable of performing the lunar landing, takeoff, and transearth injection for the lunar-orbital rendezvous concept. Initial results show that the last concept has the greatest propellant requirement and thus determines the size of the module.

Mission characteristic velocities and translunar injected gross weights for the lunar rendezvous mission were investigated to determine mission capability and service module propellant requirements. Variations in percent-of-the-month capability were determined for variations in midcourse correction propellant allowances, both with and without trajectory constraints related to landings in the lunar equatorial plane.

A steering scheme for controlling the lateral and longitudinal range during the atmospheric entry phase of the Apollo mission was developed and was included in the trajectory program. The method is based on an approximate closed-form range prediction solution. This program was used to investigate the effects of guidance on entry heating and loads, and to determine entry trajectory dispersions.

Ballistic entries for lunar missions were investigated as possible back-up to the nominal bank-angle controlled lift vector mode. Entry corridor requirements, touchdown dispersions, and the effects of atmospheric density variations on corridor requirements were determined.

During the next period, the torque and control logic required for reorientation and heat shield forward trim of the command module following tower jettison during an abort maneuver will be determined.

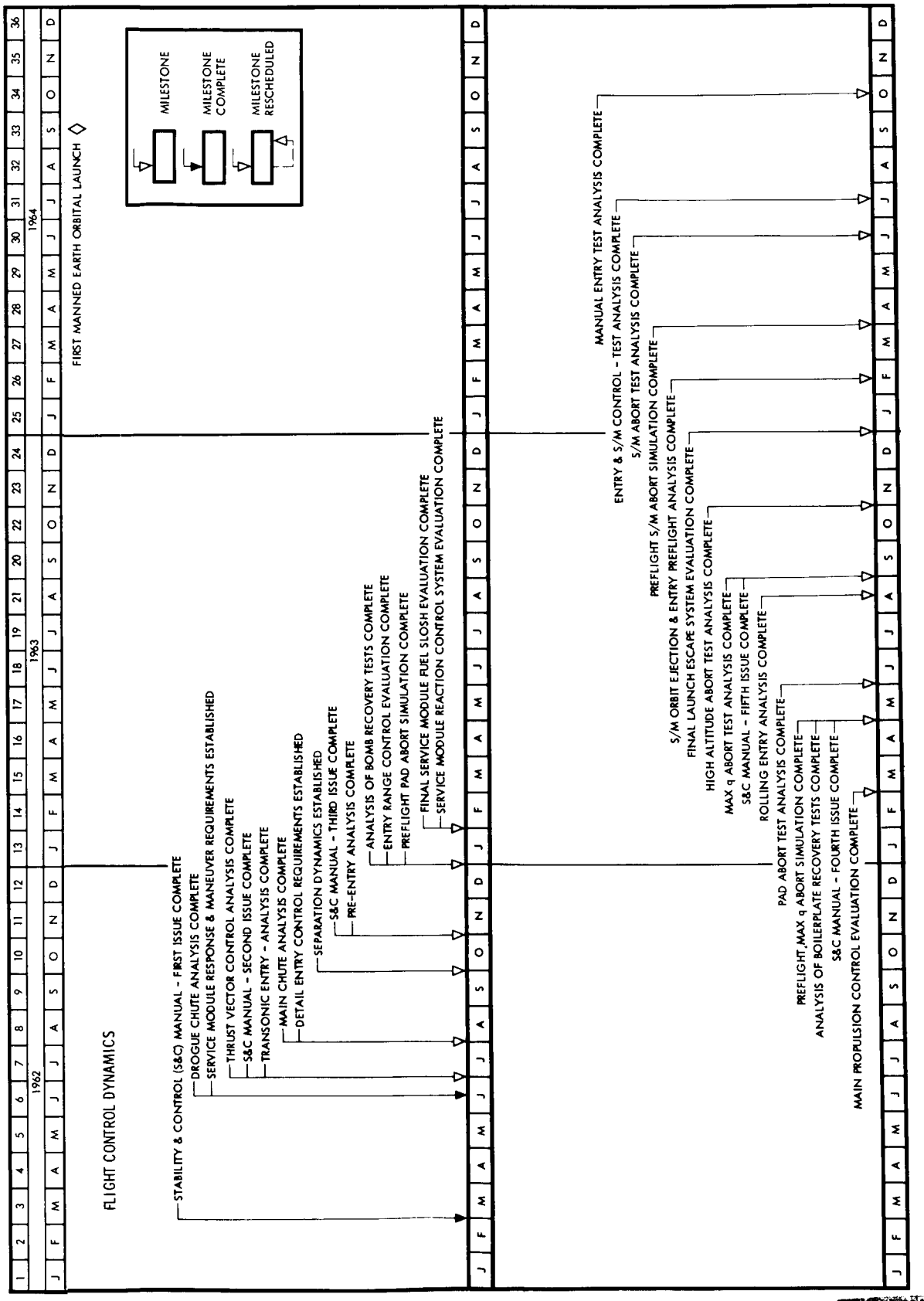
1962
1963
1964
FLIGHT CONTROL DYNAMICS
STABILITY & CONTROL (S&C) MANUAL - FIRST ISSUE COMPLETE
DROGUE CHUTE ANALYSIS COMPLETE
SERVICE MODULE RESPONSE & MANEUVER REQUIREMENTS ESTABLISHED
THRUST VECTOR CONTROL ANALYSIS COMPLETE
S&C MANUAL - SECOND ISSUE COMPLETE
TRANSONIC ENTRY - ANALYSIS COMPLETE
MAIN CHUTE ANALYSIS COMPLETE
DETAIL ENTRY CONTROL REQUIREMENTS ESTABLISHED
SEPARATION DYNAMICS ESTABLISHED
S&C MANUAL - THIRD ISSUE COMPLETE
PRE-ENTRY ANALYSIS COMPLETE
ANALYSIS OF BOMB RECOVERY TESTS COMPLETE
ENTRY RANGE CONTROL EVALUATION COMPLETE
PREFLIGHT PAD ABORT SIMULATION COMPLETE
FINAL SERVICE MODULE FUEL SLOSH EVALUATION COMPLETE
SERVICE MODULE REACTION CONTROL SYSTEM EVALUATION COMPLETE
FIRST MANNED EARTH ORBITAL LAUNCH
MILESTONE
MILESTONE COMPLETE
MILESTONE RESCHEDULED
MANUAL ENTRY TEST ANALYSIS COMPLETE
ENTRY & S/M CONTROL - TEST ANALYSIS COMPLETE
S/M ABORT TEST ANALYSIS COMPLETE
PREFLIGHT S/M ABORT SIMULATION COMPLETE
S/M ORBIT EJECTION & ENTRY PREFLIGHT ANALYSIS COMPLETE
FINAL LAUNCH ESCAPE SYSTEM EVALUATION COMPLETE
HIGH ALTITUDE ABORT TEST ANALYSIS COMPLETE
MAX q ABORT TEST ANALYSIS COMPLETE
S&C MANUAL - FIFTH ISSUE COMPLETE
ROLLING ENTRY ANALYSIS COMPLETE
PAD ABORT TEST ANALYSIS COMPLETE
PREFLIGHT MAX q ABORT SIMULATION COMPLETE
ANALYSIS OF BOILERPLATE RECOVERY TESTS COMPLETE
S&C MANUAL - FOURTH ISSUE COMPLETE
MAIN PROPULSION CONTROL EVALUATION COMPLETE

Other trajectory-shaping techniques will be evaluated—principally the MIT guidance equations and adjoint methods. The analog-DDA computer will be used for these evaluations.

Further analysis of the parachute deployment envelope will be conducted with primary emphasis placed on the critical high-altitude abort condition. Use of the drogue parachute as a device for possible command module stabilization during this condition, will be investigated. Modification of the parachute subsystem design envelope may be necessary if the need for a high-altitude drogue deployment is demonstrated.

An additional analysis of the open-loop system will be conducted for the LES including the effect of wind shears, gusts, and rocket alignment tolerances.

A more detailed study of the tower jettison maneuver coupled with possible booster dispersion will be conducted to investigate the effect of the initial booster angle of attack and pitch rate on the tower trajectory.

AEROTHERMODYNAMICS

Aeroheating Analysis

During the past quarter, the analysis used to estimate heating loads in the preliminary design was refined. The evaluation of wind tunnel test data, particularly those obtained from tests performed at JPL, Ames, and Langley, provided this refinement.

Heat transfer data, Schlieren pictures of shock surfaces, and pressure data obtained over a range of Mach and Reynolds numbers, provided a parametric correlation that was used to extend model data to full-scale flight conditions.

Real gas effects, ionization, and radiation were reevaluated. The IBM -7090 formulation of the entry heating analysis was changed to incorporate these wind tunnel data and refined analyses.

Heat loads for a series of skip-out trajectories were computed to determine the effect of trajectory on heat-shield weight.

Ascent heating data for C-1 and C-5 boosters were reevaluated by incorporation of wind tunnel data showing the effect of the launch-escape tower.

A refined study was published concerning the aerodynamic entry heating of the command module reaction control system rockets. Suitable

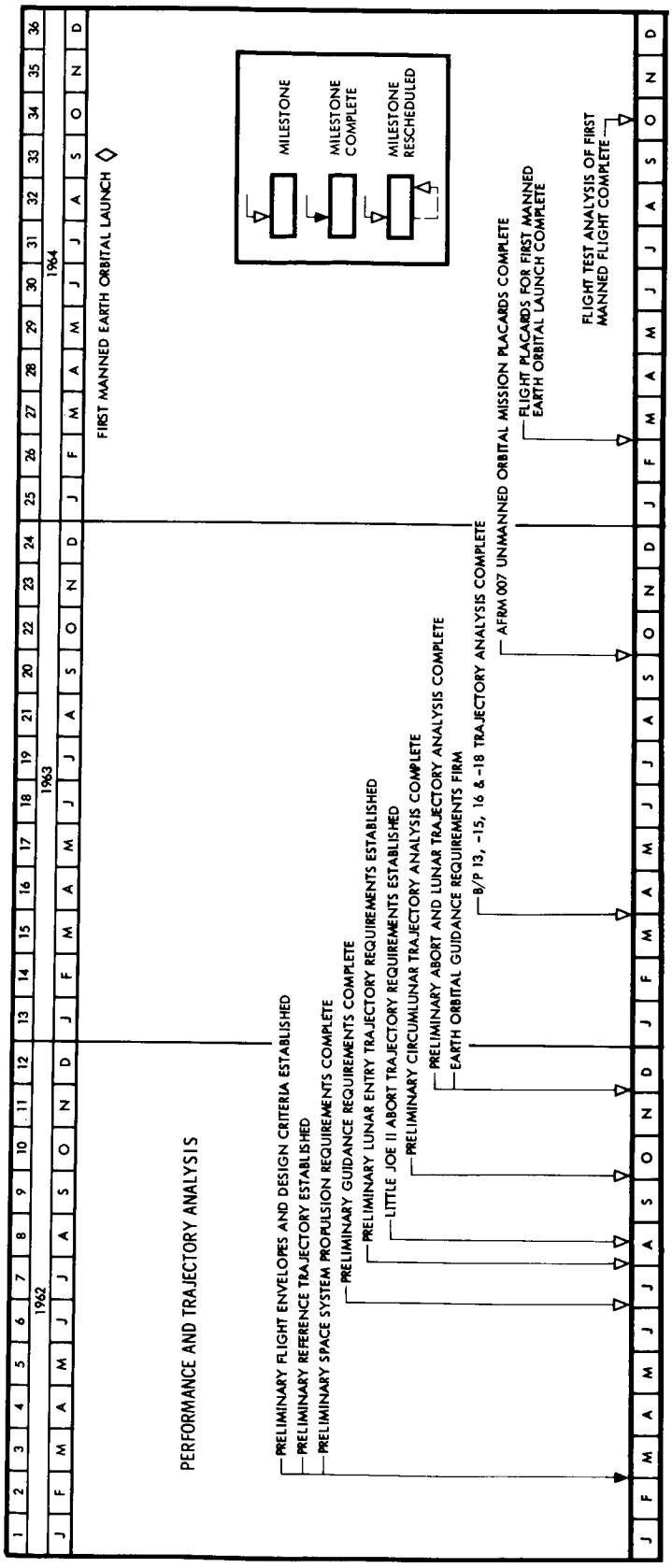
1962
1963
1964
PERFORMANCE AND TRAJECTORY ANALYSIS
FIRST MANNED EARTH ORBITAL LAUNCH
MILESTONE
MILESTONE COMPLETE
MILESTONE RESCHEDULED
PRELIMINARY FLIGHT ENVELOPES AND DESIGN CRITERIA ESTABLISHED
PRELIMINARY REFERENCE TRAJECTORY ESTABLISHED
PRELIMINARY SPACE SYSTEM PROPULSION REQUIREMENTS COMPLETE
PRELIMINARY GUIDANCE REQUIREMENTS COMPLETE
PRELIMINARY LUNAR ENTRY TRAJECTORY REQUIREMENTS ESTABLISHED
LITTLE JOE II ABORT TRAJECTORY REQUIREMENTS ESTABLISHED
PRELIMINARY CIRCUMLUNAR TRAJECTORY ANALYSIS COMPLETE
PRELIMINARY ABORT AND LUNAR TRAJECTORY ANALYSIS COMPLETE
EARTH ORBITAL GUIDANCE REQUIREMENTS FIRM
B/P 13, -15, 16 & -18 TRAJECTORY ANALYSIS COMPLETE
AFRM 007 UNMANNED ORBITAL MISSION PLACARDS COMPLETE
FLIGHT PLACARDS FOR FIRST MANNED EARTH ORBITAL LAUNCH COMPLETE
FLIGHT TEST ANALYSIS OF FIRST MANNED FLIGHT COMPLETE

locations for the rockets were determined to some extent by a study of heating rates as a function of location and effect on the motors.

During the next period, the aeroheating estimates will be refined. The results of the wind tunnel heat transfer tests obtained at the Arnold Engineering Development Center (AEDC) and Cornell Aerospace Laboratory (CAL) will be incorporated into the IBM-7090 program. During this period, Avco will perform tests of the heat protection ablative material to determine the effect of out-gassing and surface roughness on flow transition. These results, also, will be incorporated into the IBM program.

Wind Tunnel Program

Wind tunnel heating tests of the entry and launch configuration were completed at Mach numbers 6.0, 7.0, and 9.0, and at a Reynolds number range of 55,000 per inch to 25,000 per inch. These tests were conducted in the JPL wind tunnel on a thin-skin 0.02-scale model (3-inch diameter).

The first impulse wind tunnel heat transfer tests at Mach numbers 16, 18, and 20 were completed in the NAA 12-inch-diameter shock tunnel on a 0.02-scale model (3-inch diameter) of the entry configuration.

An 0.045-scale thin-skin model (7-inch diameter) of the entry and launch configuration was tested in the AEDC B and C tunnels.

A 1/2-inch-diameter entry model was tested in the Avco shock tunnel at stagnation enthalpies of 24,000 Btu per pound.

An 0.045-scale (7-inch diameter) model is being fabricated and will be tested in the CAL 48-inch impulse tunnel at the Mach number range of 16 to 22.

The change of entry attitude as affected by the mass-loss distribution of the ablative material will be determined and, together with control-system capabilities and trajectory requirements, will be used to determine changes of attitude during entry.

Wind tunnel test data on the launch configuration and rocket exhaust heat transfer test data will be used to modify the launch and abort heating estimates. Consideration of separated flow, variation of angle of attack, and shock impingement will be made and will be based on wind tunnel test results.

The effect on local heating rates of surface discontinuities, such as reaction control jet installation, launch escape tower sockets, and command

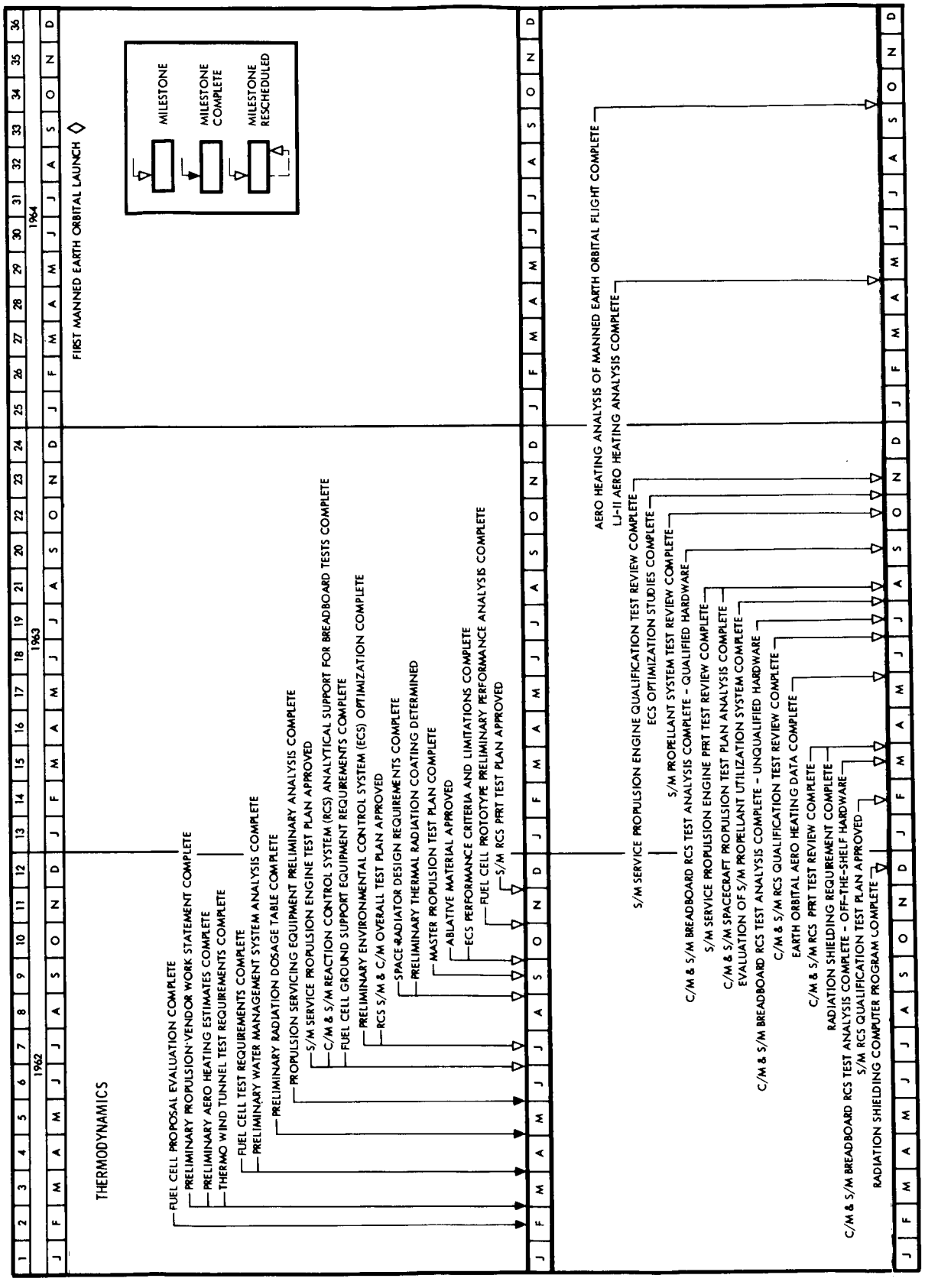
1962
1963
1964
FIRST MANNED EARTH ORBITAL LAUNCH ◇
MILESTONE
MILESTONE COMPLETE
MILESTONE RESCHEDULED
THERMODYNAMICS
FUEL CELL PROPOSAL EVALUATION COMPLETE
PRELIMINARY PROPULSION VENDOR WORK STATEMENT COMPLETE
PRELIMINARY AERO HEATING ESTIMATES COMPLETE
THERMO WIND TUNNEL TEST REQUIREMENTS COMPLETE
FUEL CELL TEST REQUIREMENTS COMPLETE
PRELIMINARY WATER MANAGEMENT SYSTEM ANALYSIS COMPLETE
PRELIMINARY RADIATION DOSAGE TABLE COMPLETE
PROPULSION SERVICING EQUIPMENT PRELIMINARY ANALYSIS COMPLETE
S/M SERVICE PROPULSION ENGINE TEST PLAN APPROVED
C/M & S/M REACTION CONTROL SYSTEM (RCS) ANALYTICAL SUPPORT FOR BREADBOARD TESTS COMPLETE
FUEL CELL GROUND SUPPORT EQUIPMENT REQUIREMENTS COMPLETE
PRELIMINARY ENVIRONMENTAL CONTROL SYSTEM (ECS) OPTIMIZATION COMPLETE
RCS S/M & C/M OVERALL TEST PLAN APPROVED
SPACE RADIATOR DESIGN REQUIREMENTS COMPLETE
PRELIMINARY THERMAL RADIATION COATING DETERMINED
MASTER PROPULSION TEST PLAN COMPLETE
ABLATIVE MATERIAL APPROVED
ECS PERFORMANCE CRITERIA AND LIMITATIONS COMPLETE
FUEL CELL PROTOTYPE PRELIMINARY PERFORMANCE ANALYSIS COMPLETE
S/M RCS PRRT TEST PLAN APPROVED
AERO HEATING ANALYSIS OF MANNED EARTH ORBITAL FLIGHT COMPLETE
LJ-II AERO HEATING ANALYSIS COMPLETE
S/M SERVICE PROPULSION ENGINE QUALIFICATION TEST REVIEW COMPLETE
ECS OPTIMIZATION STUDIES COMPLETE
S/M PROPELLANT SYSTEM TEST REVIEW COMPLETE
C/M & S/M BREADBOARD RCS TEST ANALYSIS COMPLETE - QUALIFIED HARDWARE
S/M SERVICE PROPULSION ENGINE PRRT TEST REVIEW COMPLETE
C/M & S/M SPACECRAFT PROPULSION TEST PLAN ANALYSIS COMPLETE
EVALUATION OF S/M PROPELLANT UTILIZATION SYSTEM COMPLETE
C/M & S/M BREADBOARD RCS TEST ANALYSIS COMPLETE - UNQUALIFIED HARDWARE
C/M & S/M RCS QUALIFICATION TEST REVIEW COMPLETE
EARTH ORBITAL AERO HEATING DATA COMPLETE
C/M & S/M RCS PRRT TEST REVIEW COMPLETE
RADIATION SHIELDING REQUIREMENT COMPLETE
C/M & S/M BREADBOARD RCS TEST ANALYSIS COMPLETE - OFF-THE-SHELF HARDWARE
S/M RCS QUALIFICATION TEST PLAN APPROVED
RADIATION SHIELDING COMPUTER PROGRAM COMPLETE

module support pads, will be modified through use of information resulting from wind tunnel tests being performed by Avco and S&ID.

During the next period, entry heat transfer tests will be conducted in the CAL shock tunnel on an 0.95-scale (7-inch diameter) model. Model heat transfer will be estimated for the expected tunnel condition to facilitate a preliminary evaluation of the test data.

Evaluation of the AEDC wind tunnel tests of the entry and launch configurations will be completed.

The entry heating tests of the command module reaction control system rocket installation will be completed.

Tests to determine the heating of the service module surface because of reaction control systems rocket exhaust impingement will be made in the Rocketdyne laboratories.

Avco will continue heat transfer testing of entry conditions in shock tunnels and arc-jets with emphasis on radiation, ionization, and ablative material effects.

HEAT TRANSFER ANALYSIS

Launch Escape System (LES)

Preliminary boost-heating studies of the LES nose cone, tower-jettison motor casing, LES rocket casing, and skirt were completed. The results show no serious thermal problems.

A preliminary estimate of the ablative protection required for the truss members of the LES tower was made for no-article impingement from the LES rocket exhaust. A study of the exhaust characteristics, however, revealed that the truss members would be subjected to considerable particulate matter in the exhaust. A summary of information obtained from available literature indicated that the ablative thickness required for a given back-face temperature could be increased tenfold because of the erosion effects of these particles. For this reason, a test program was initiated from which sufficient data should be obtained to predict the ablative requirements for the LES tower.

Refined analyses that consider all planned flight trajectories and effects of rocket firings are in progress.

The particle-impingement tests of several ablative materials will be conducted to determine the effects of the exhaust particles upon the apparent

ablation rates. The results of these test will be utilized in design weight-temperature trade-off studies for the LES tower.

Command Module

Preliminary thermal studies of the entry heating of the command module attitude-control rocket were completed. The results indicate probable overheating of the rockets in the regions on the windward side of the module.

The peak surface temperatures during reentry for the flush-mounted lunar-landing window, observation window, and earth-landing orientation window are estimated to be 1430 F and 2380 F respectively. These results are based on heating rates for an undershoot trajectory.

Experimental confirmation of the heating rates on the leeward surface is expected to be obtained during the next report period.

The feasibility of allowing numerous small penetrations to exist in the ablative heat shield during reentry is being investigated by conducting arc-jet tests. The exposed penetrations are to permit the exclusion of spring-loaded doors in the heat shield design. The doors were originally intended to include the electrical and hardline disconnects for candidate materials for the ablative heat shield.

A parametric heat transfer study of the command module was initiated to determine the thermal role of structure and components. An initial analysis of this study was made to estimate temperatures and heat loads during space operations involving translunar and lunar stay under cabin-pressure failure conditions and translunar, lunar orbit, and lunar stay under normal conditions.

For the boost-abort tests on boilerplate 6, 12, 20, and 21, some form of thermal protection (e.g., 0.075 inches of Thermolag T-500) will be required to prevent the structure temperatures from exceeding 250 F.

The temperature-distribution history of flush-mounted windows on the command module will be evaluated when the experimental heating-rate data become available. This temperature history will be evaluated by considering both conductive and radiative transport of thermal energy through the windows. If the flush windows are then considered feasible, a thermal stress analysis of the windows and frames will be performed to substantiate the design. A proof test, subjecting the design to simulated reentry heating, will also be considered.

Refined studies of the reaction control system (RCS) rockets on the command module are planned, pending experimentation results, to determine the effects of heating rates on recessed rockets. The possible overheating of the cooling coils and injector is being investigated.

A series of design configurations of the umbilical disconnects in the ablative heat shield on the command module will be evaluated in arc-jet facilities. The extreme thermal environment of atmospheric reentry should be adequately simulated for these tests to obtain results for establishing design information for allowable patterns for the penetrations.

An amplification and refinement of the present heat transfer analysis will be undertaken to aid in the proper weight-performance design decisions. This study will include the choice of design materials and possible variations of the Apollo mission operations.

Extensive arc-jet testing will begin on the Apollo heat shield material. This work will also include simulated-boost heating conditions.

Service Module

A study was completed to determine the boost-heating effects on the service module and its adapter. Results show that the maximum expected face temperature of the service module shell structure is 291 F. The maximum temperature difference across the thickness of the honeycomb structure is 93 F along the axial direction; a maximum variation of 20 F is expected.

A preliminary parametric study was completed to determine service module propellant and component temperature histories during the translunar and lunar-night missions. The results of this initial study indicate that high-vacuum superinsulation or electrical heaters will be required to prevent freezing of the propellant.

Further boost-heating studies of the service module adapter are planned as the design is still uncertain. Additional studies will include the effect of the impingement heating caused by firing the service module main propulsion engine during high-altitude abort. Refined analyses of the temperatures of the service module components are planned as the design progresses. Further studies will include impingement heating effects caused by firing the service module RCS rockets as well as the over-all effects of space environment. The initial propellant tank insulation studies will be continued for the lunar-day, lunar-orbit, and transearth missions.

Component temperature history studies will be made for the case when a superinsulation is applied to the internal surface of the service module shell. The results of this study will be compared to initial propellant tank insulation studies and will be analyzed from an optimum-weight viewpoint. Detailed component temperature studies will be made of different aluminum surface properties.

ENVIRONMENTAL CONTROL SYSTEMS (ECS) ANALYSIS

Crew Support and Water Management

During the last quarter, water management history profiles for lunar-landing missions and lunar-orbiting missions were prepared. Orders of magnitude of air flow, pressure drops, and optimum line sizes for the waste management system were determined. The possibility of gas build-up as a result of anaerobic decomposition of stored solid wastes was investigated.

During the next period, the effects on the water management system will be determined if the lunar excursion module is to be supplied with water from the command module.

A performance flow chart for the water management system exhaust blower will be prepared, and performance characteristics for the waste management system blower will be determined.

Atmospheric Composition and Control

A computer program that calculates the temperature flow, humidity, and pressure drop analysis throughout the suit circuit was completed. Flow charts for suit circuit showing temperature pressures and flow for various operating modes were prepared.

System performance data for the liquid coolant loop were analyzed.

A program to determine contamination quantities and levels for command module atmosphere was initiated. A command module pressure study and a pressurization and venting study for the air lock were completed.

Suit circuit computer program with latest component performance revisions will be up-dated. ECS data of expected performance with revised thermal heat loads and electrical heat loads will be analyzed. Data from suit test will be reviewed to determine the effect on system performance. The suit circuit temperature rise during reentry will be determined, and methods of providing cooling during reentry from 100,000 feet to sea level will be studied.

A computer program for the liquid-coolant loop will be completed.

Unmanned Spacecraft Cooling Studies

The electronic cooling system concept for the pad abort and maximum q spacecraft, (boilerplate 6, 12, 20, and 21) has been established. Detailed studies will be completed to determine system component performance requirements for the pad abort and maximum q unmanned spacecraft.

When instrumentation cooling data is available from NASA and operational requirements are established, cooling concepts will be investigated for the orbital unmanned spacecraft (boilerplate 13, 15, 16, and 18).

Equipment Cooling

Various coldplate coolant passage sizes and flow patterns were considered in preliminary analysis to establish the best configuration based on uniformity of surface temperature, coolant heat transfer area, pressure drop objectives, and design producibility. The most promising arrangement found was analyzed in detail using an IBM computer program. Test plates have been made and are being fabricated to furnish actual values of fluid friction and heat transfer coefficients. For the program, the coefficients were calculated from empirical expressions.

Two nonprototype coldplates fabricated specifically for thermal testing have been completed. The coolant passages are those established by the foregoing analysis. The passages were milled, and the plates were assembled by adhesive bonding. Preliminary pressure drop data have been obtained, and the results are being incorporated in analysis. The computer program will be continued to solve combined heat transfer fluid flow problems. This will shorten the time required to evaluate the effects of changing operating conditions.

Program input data for assumed values of film coefficients will be modified as actual values are obtained from laboratory tests, and new results will be plotted.

The development of a computer program is planned to solve the problems of simultaneous fluid flow and heat transfer for any coldplate system coolant flow arrangement.

The values for the electronic load for each module requiring coldplate cooling as a function of duty cycle at various mission phases will be evaluated.

The second nonprototype coldplate will be used for further pressure drop testing and preliminary thermal testing at sea level ambient pressure and in a vacuum.

Nuclear Radiation and Shielding

The average directional characteristic of proton radiation beam from three flares was determined in celestial coordinates to be used in establishing a preferred vehicle orientation when such flares occur. Data have been compiled on the important types of solar events to define source areas further.

Analyses and computer programs have been initiated to determine shielding characteristics of the command and service modules. Requirements have been prepared for a radiation instrument laboratory to test equipment required for the Apollo mission.

The study regarding determination of the directional characteristics of proton radiation beams is continuing in order to establish a preferred vehicle orientation if such beams are encountered. The command and service module shielding computer program will be expanded to include additional radiation types.

Computer programs are planned to determine the dosage at a point in the command module for various shielding thicknesses using data from the solar event of 10 May 1959. Detailed system specifications will be prepared for the procurement of Apollo space radiation instrumentation, and a detailed test program will be specified.

POWER SYSTEM ANALYSIS

Fuel Cell

Module terminal voltage, module hydrogen consumption rate, and module heat rejection rates have been analytically determined as functions of net power output per module.

A study establishing prelaunch warm-up power requirements and heating element temperature levels has been completed.

During the next period, the steady-state and transient response of fuel cell temperature to variations in secondary coolant temperature will be analyzed.

The operation temperature limits of the fuel cell will be determined with respect to differential expansion of the electrolytic and structure at high temperatures and cell voltage decrease at low temperatures.

Cryogenic Gas Storage

Studies of the storage gas temperatures and pressures for the entire mission profile have been completed based on both percentage of remaining gas and on elapsed time.

Tank volumes, insulation thicknesses, diameters, and configurations have been computed. Power requirements and tank heater sizing have been determined for prelaunch pressurization.

An analysis of command module emergency puncture effect on oxygen and nitrogen instantaneous and total flow has been completed. Quantities of tank gases vented overboard due to three different storage system malfunctions have been computed.

More definitive analyses of the several aspects of the supercritical gas storage subsystem will be initiated during the next period. They include insulation selection (load-bearing versus not load-bearing) with separate support system, zero-g heat transfer for selection of static versus dynamic tank gas heating methods, ullage requirements, and prelaunch and operational heating requirements.

Electrical Power System (EPS) Radiator

The EPS heat rejection system was analyzed, and the design criteria were established for a lunar-day lunar landing mission. Analyses of radiator requirements for other types of missions (lunar and earth orbits) are in process.

A computer program for determination of off-design performance characteristics of the space radiators was written and is in the final check-out phase.

Analyses will be performed during the next period to determine optimum location of radiator panels for orbital missions consistent with over-all system integration requirements.

The analysis of performance parameters will be continued to assure EPS optimization.

A study of all off-design performance characteristics will be initiated to determine control requirements.

Refinement of the computer programs in use will continue.

A study of other existing programs and analytical approaches will be made to develop a program capable of handling all steady-state and transient radiator problems.

Environmental Control System (ECS) Radiator

The ECS radiator heat rejection requirements were established, and the radiator was sized for lunar subsolar operation. A study was initiated to determine radiator requirements for lunar and earth-orbit missions.

Graphs showing control curves for the ECS radiator will be prepared.

A study of the use of propellant, structure, or other large weight masses in the service module as a heat sink has been initiated and will be continued.

Integrated Heat Rejection Systems

An investigation of several integrated systems was conducted to determine the feasibility of combining the ECS and EPS temperature control functions.

Temperature Control Coatings

Investigations of suitable surface coatings were initiated. The optical properties of several candidate coatings are being tested under simulated space environments to establish possible degradation during the mission.

Screening of candidate coatings will be continued. All promising materials will be subjected to laboratory tests to investigate the effects of the space environment on optical properties of the materials.

Several orbiting vehicle tests are planned that will require selection and submission of test coupons during the next period.

PROPULSION SYSTEM ANALYSIS

Propellant Systems

A method for determining properties of the helium pressurization system was programmed for high-speed computation.

Pressure drops in the service module main propellant feed system were calculated. A 2.5-inch-diameter fuel line size and a 3.5-inch-diameter oxidizer line size were recommended. Temperatures ranging from 30 to 150 F did not significantly affect the characteristic friction pressure drop. Parametric studies were made for the RCS friction pressure drop in the propellant lines for one-, two-, or three-engine operation at one time.

The effects of a zero-g environment upon the storable propellant system was initiated.

Propellant surge pressure rises above the normal system pressure level were predicted due to rapid propellant valve shut-off. The results at this time do not indicate serious problems.

The following programs are planned for determining optimum performance and utilization of the propellant pressurization system:

Helium temperature variations during single and multiple firings for both RCS system and the service module main engine system

Pressure drop variations in the propellant utilization system

Surge-pressure variations in all liquid propellant lines during shutdown

Experimental program to investigate the effects of zero-g on Apollo propellants

Liquid propellant temperature variations as a function of mission duty cycle.

Rocket Engine System

An analysis was continued on the effect of reentry heating on temperature of fuel in the command module RCS cooling coil. A major problem in the area of propellant heating became apparent. The heating rates in the vicinity of the command module RCS thrust chamber, due to reentry, were formulated, and an extensive investigation was conducted. It was found that the propellant in the fuel coils of the 92-degree yaw engine was beyond acceptable limits.

A preliminary study of the low-thrust RCS (cold gas and bipropellant) was completed.

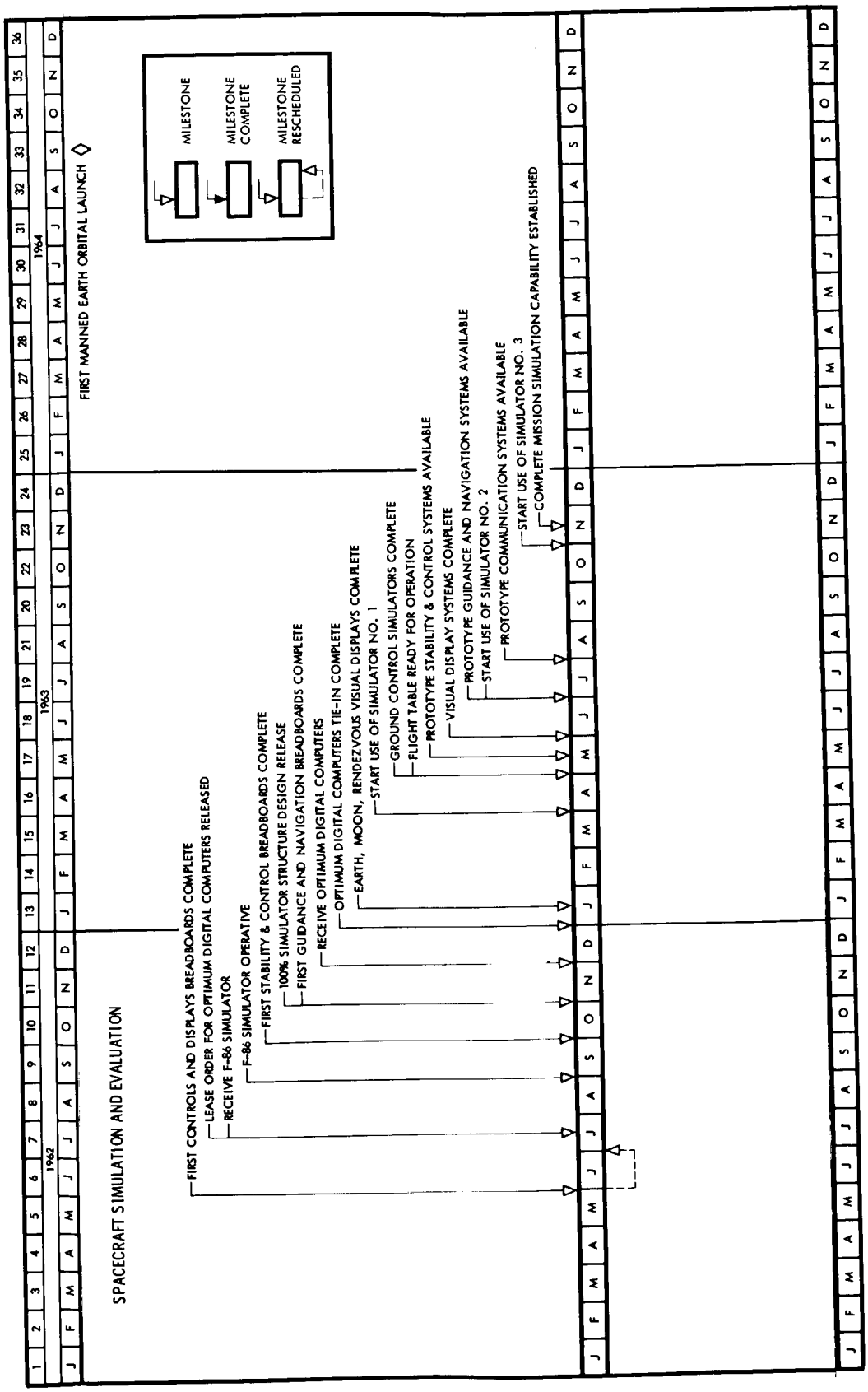
1962
1963
1964
MILESTONE
MILESTONE COMPLETE
MILESTONE RESCHEDULED
SPACECRAFT SIMULATION AND EVALUATION
FIRST MANNED EARTH ORBITAL LAUNCH
FIRST CONTROLS AND DISPLAYS BREADBOARDS COMPLETE
LEASE ORDER FOR OPTIMUM DIGITAL COMPUTERS RELEASED
RECEIVE F-86 SIMULATOR
F-86 SIMULATOR OPERATIVE
FIRST STABILITY & CONTROL BREADBOARDS COMPLETE
100% SIMULATOR STRUCTURE DESIGN RELEASE
FIRST GUIDANCE AND NAVIGATION BREADBOARDS COMPLETE
RECEIVE OPTIMUM DIGITAL COMPUTERS
OPTIMUM DIGITAL COMPUTERS TIE-IN COMPLETE
EARTH, MOON, RENDEZVOUS VISUAL DISPLAYS COMPLETE
START USE OF SIMULATOR NO. 1
GROUND CONTROL SIMULATORS COMPLETE
FLIGHT TABLE READY FOR OPERATION
PROTOTYPE STABILITY & CONTROL SYSTEMS AVAILABLE
VISUAL DISPLAY SYSTEMS COMPLETE
PROTOTYPE GUIDANCE AND NAVIGATION SYSTEMS AVAILABLE
START USE OF SIMULATOR NO. 2
PROTOTYPE COMMUNICATION SYSTEMS AVAILABLE
START USE OF SIMULATOR NO. 3
COMPLETE MISSION SIMULATION CAPABILITY ESTABLISHED

A study of the pulse-phase operating characteristics associated with the reaction control engines was partially completed, and preliminary estimates of the operating parameters were formulated.

A comparative analysis of the development and costs associated with variable-thrust and constant-thrust rocket engines (using storable propellants) for the service main propulsion system was completed.

An appraisal of the state of the art of variable-thrust liquid propellant rocket engines was made.

A comparison of the relative merits of various gimbal actuators for the service module main rocket engine was prepared.

Two optimization studies were completed for the SPS. One study applied to the spacecraft employing a service module sized for the lunar lift-off mission. The other study employed a service module sized for the lunar excursion module mission with lunar lift-off capability.

Support analysis related to the design and performance of a scale model launch escape motor for use in stability tests was initiated. This involved the design of a 0.085-scale motor using hydrogen peroxide as the propellant to simulate the exhaust from the LES motor.

Effort is continuing to determine the optimum thrust, chamber pressure, and expansion ratio of the main service module engine for the various missions. Rocket engine development activity on the main service module engine will be monitored, and potential problem areas will be investigated.

An investigation of various alternative designs for the command module RCS engines will be initiated. This investigation will include the effects of reentry heating on the design and the performance of the engine under operating conditions.

Effort will be continued in the area of low-thrust RCS engines. Investigation of RCS engine performance under pulsing conditions will be continued.

The design and analysis work for the peroxide launch escape model engine will be continued. Support activity will be given in injector flow tests and in the final chamber tests.

[redacted]

Interface Systems

The study of rocket exhaust plumes was used to predict service module/RCS plume impingement heating rates on the service module radiators, LES/command module tower plume impingement properties for calculating heating rates for both the 19-degree and 33-degree nozzle cant angles, and LES thrust vector deflection estimates due to exhaust plume impingement on LES tower support rods.

The study of rocket exhausts currently underway include the following:

An IBM program to predict the properties throughout the rocket plume will be used for the command module, service module, and LES rockets.

Detailed parametric tests and studies of rocket exhaust plumes and impingement in near-vacuum condition will be made for application to the service module and command module reaction controls plume impingement problems.

Stage separations studies will be made to determine the proper spacing between the service module nozzle and the S-IV instrument wafer-target, the shape of the wafer-target, the size and location of the blow-out panels, and other possible modes of abort separation.

TEMPERATURE CONTROL COATINGS

A detailed plan of action covering development and test of satisfactory ECS and fuel cell thermal radiator coatings has been completed. This plan of action is currently under review by the thermodynamics group.

Specimens of the Lockheed white silicate coating have been subjected to 350 sun-hours of vacuum-ultraviolet exposure at 10^{-6} Torr and 10 times solar flux. The coating darkened considerably. Postexposure optical property values are not yet available. Specimens are still under exposure to 10 times solar ultraviolet irradiation under 10^{-6} Torr vacuum as a comparison to establish the validity of accelerated testing of this material.

During the next period, active work will be initiated on the temperature control coatings.

SIMULATED SPACE SPHERES

Fabrication of the 4-foot-diameter reinforced fiberglass sandwich core space sphere simulator and the plenum chamber of air-bearing base have been completed. Coatings are being applied to the exterior surface of the sphere and air-bearing chamber. This will reduce frictional drag to a minimum.

The fabrication of a 20-foot-diameter reinforced plastic sandwich space sphere is under consideration. This unit will be used to house a command module for flight simulation. This initial request will be issued shortly by the Apollo simulator section for laboratory preparation of preliminary costs, fabrication criteria, and design construction configurations of this large space simulator. Information will be required from the engineering development laboratories for incorporation into a formal proposal for presentation by the Apollo simulator section.

ANTIGRAVITATIONAL SUSPENSION PLATFORM

A 2-foot-diameter antigravitational suspension platform has been completed by the engineering development laboratories and has been delivered to the Apollo simulation center for evaluation. The fabrication of a 4-foot-diameter unit has been deferred until after completion of the evaluation program of the two platforms.

[redacted]

INTEGRATION AND SYSTEM ANALYSIS

CONFIGURATION CONTROL

Problems have been encountered with the installation of the initial measurement unit (IMU), sextant-telescope, and navigational base.

Preliminary interface control drawings (ICD's) have been prepared for the MIT sextant-telescope installation and escape propulsion motor. Individual system schematics have been prepared.

Inboard profiles of the command module crew compartment and equipment bays have been revised. Inboard profiles of the service module are nearing completion. Inboard profile for boilerplate 6 will be completed when the systems schematic is obtained.

General configuration arrangements for the boilerplate and spacecraft vehicles are being completely revised to reflect the latest information.

Parts lists for boilerplate 1 have been prepared and are ready for distribution. The parts list on the remaining boilerplate vehicles is being prepared.

On determination of the requirements for GSE, configuration control will continue. The form to be used for a design change is being prepared. The change control procedures have been written and are now being coordinated. The problem concerning installation of the IMU sextant-telescope and navigational base is to be evaluated in the next quarter.

PROJECT REQUIREMENTS

Specifications and Requirements

A revised Apollo mission performance specification has been prepared. The basic format for the Apollo spacecraft performance specification has been established. Current efforts are directed toward the assimilation of the available technical context and the generation of new data, where required, to develop an adequate document. The definitions document has been revised to reflect program redirection. A revision to the hardware utilization list is being released.

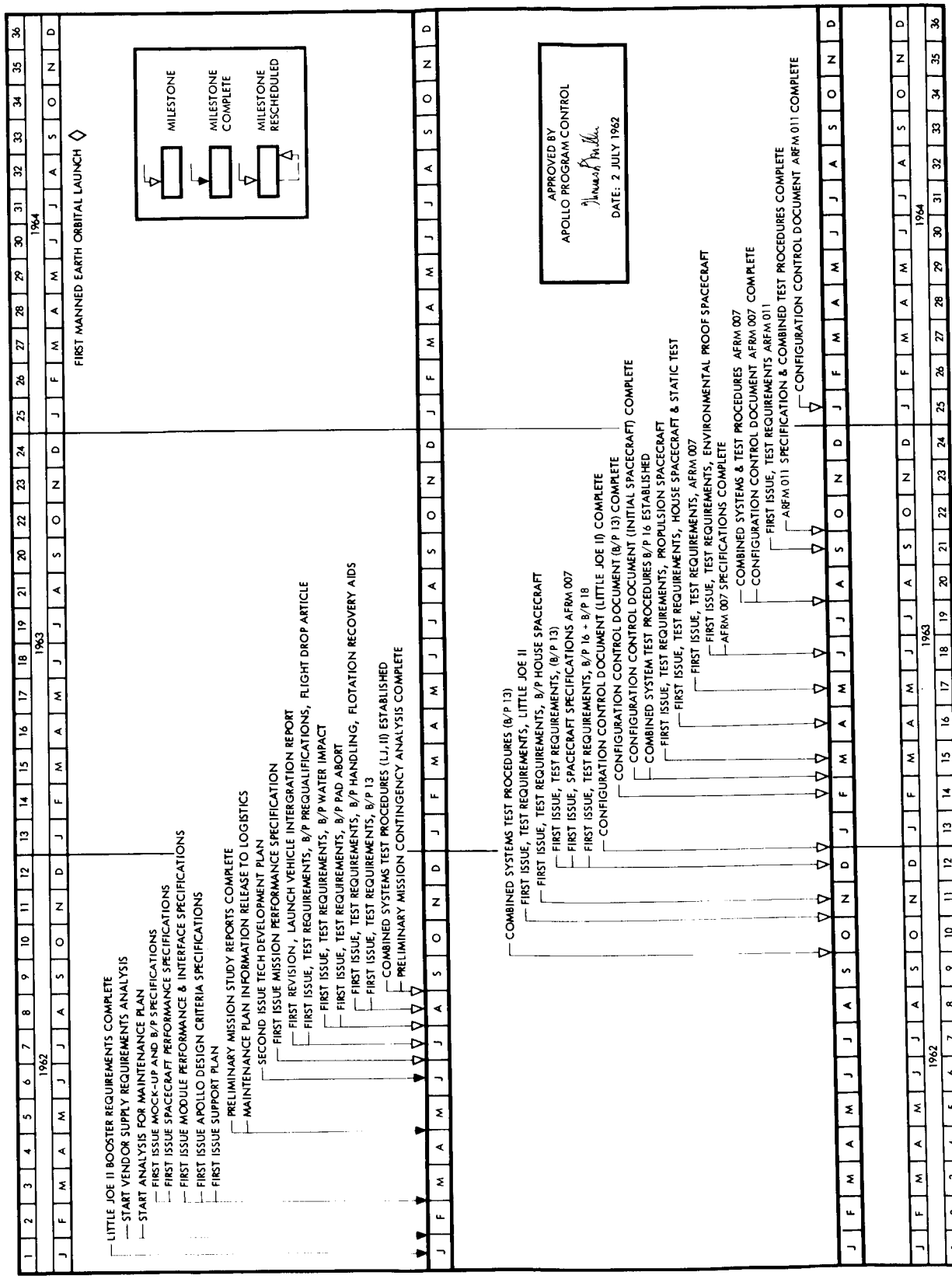

GENERAL ORDER DEVELOPMENT SCHEDULE—INTEGRATION AND SYSTEM ANALYSIS—G. O. 7122

Studies and Analysis

A technical development plan for incorporation into the program plan describes the technical portion of the Apollo program through the first manned earth-orbital flight.

A plan of action has been initiated to institute a long-range study program on the Apollo spacecraft systems configuration effect on reliability and associated cost consideration.

A mission failure analysis program has begun using the algebraic logic investigation of Apollo systems (ALIAS) method. This makes it possible to analyze any and all component failures in a given mission or system.

An analysis is continuing to define the GSE and simulation requirements to check out the various flight test vehicles. This analysis will be concerned with the ultimate Apollo mission ground checkout and launch operation.

Systems Integration

The ground and bonding configuration concept proposed by systems integration for S&ID has been completed. Test plans are being prepared for electromagnetic interference (EM-I) control in boilerplate 6.

A preliminary specification has been prepared for a screened enclosure proposed by systems integration for EM-I compatibility testing of the Apollo spacecraft. The initial issue of the operation measurements list (OML) was issued.

The S&ID checkout concept was presented to NASA at Houston. NASA has not given the final decision on checkout concepts.

A drafting checkout specification for boilerplate 6 pad abort test has begun.

Inputs have been furnished to MSFC, Huntsville, for the design criteria for the launcher/transporter to be used at AMR complex 39. The need for umbilical arms that will allow 360 degrees access to the command module and service module are included in these inputs.

The first edition of the Apollo Design Data Manual was released. Weekly meetings are being held to generate further inputs and to expedite revisions. Management emphasis on the manual should greatly increase its effectiveness.

Test Integration

The General Test Plan (Research and Development) for Project Apollo spacecraft has been revised and reissued.

Preliminary measurement lists for boilerplate 13, 15, 16, and 18 were reviewed and compiled from requests submitted by the various design groups. During the next report period, the first issue of the launch vehicle integration report will be started. First issue test requirements for boilerplate prequalification flight drop out will begin. First issue requirements for boilerplate impact and pad abort will be started. First issue requirements for boilerplate handling flotation recovery aids will begin. Preliminary mission contingency analysis will begin.

Contractor Relations

Closer coordination has been established by assigning a systems integration engineer to NASA, Houston. Various engineers are assigned for a 2-week period.

Subcontractor Relations

Negotiations with Lockheed Propulsion Company have progressed in defining the interface between the launch escape propulsion motor and the S&ID-furnished skirt assembly.

LOGISTICS

Detailed procedures for the preparation of Apollo Maintenance Plan inputs have been forwarded to subcontractors for compliance. Continual follow-up will be initiated to ensure correct interpretation and scheduled submittals of information for inclusion in the overall Apollo Maintenance Plan.

Support analysis of boilerplate and Little Joe II launched vehicles is in progress. Detailed maintenance data required to ensure overall support to the Apollo programare being compiled as engineering drawings are released. Data will be included in the scheduled revisions to the Apollo Maintenance Plan.

All GSE identified as a requirement to support boilerplates 1, 2, 3, 5, 6, 9, 19, and 20 have been released for fabrication.

Selection and release to fabrication of initial test support parts (for boilerplate 6 and 20 and for the GSE of boilerplate 3, 9, and 19) has begun. During the next period maintenance analysis of subsequent spacecraft and associated GSE will start.

Release of trainers and trainer spares for fabrication will commence during the next period.

MATERIALS AND PRODUCIBILITY

Environmental Testing

Testing was started on ball bearings coated with gold, silver, and molydisulphide.

Two adhesive systems (HT424 and FM1000) were tested in a 10-9 vacuum for 14 days and no detrimental effects were noted.

Launch Escape System

Tubing has been ordered by two fabrication methods, extruded and rolled and welded.

A test plan was developed to determine the thickness and type of protective coating for the launch escape tower tubing near the rocket engine exhaust. Tubing was procured, has been instrumented, and is now undergoing application of protective coating.

Command Module

Brazing alloy development for L605 and Rene 41 has progressed. A brazing alloy for each was discovered.

A special 2014-T6 aluminum forging specification to assure weldability by nondestructive testing was released. Roll ring forgings can be made to this requirement, but die forging cannot. Roll rings will be used for test items and early spacecraft. A reliable method for hand cleaning before adhesive bonding close-outs was developed.

Service Module

A plan was formulated to order very dry nitrous tetroxide and to assure the dryness of the titanium pressure vessel prior to filling. The cleaning method has been defined in a preliminary specification.

A nitrous tetroxide and titanium compatibility test was initiated to determine the maximum permissible moisture content of nitrous tetroxide when contained in titanium vessel. The joint area envelope for joining tubing by portable welding or brazing was completed. A set of standard welding and brazing fitting drawings were released. A subcontract attitude control engine proposal was reviewed.

[redacted]

Discussion was held concerning regenerative cooling versus ablator nozzle design. The regenerative cooling with a molybdenum chamber coated with disilicate was adopted.

During the next period, final producibility studies will be made and design changes recommended during the early manufacturing phase of latch mechanism and dry film lubricants. Small component destructive testing will be completed and will be evaluated prior to static tower testing.

Structure test data on Rene 41 and L605 honeycomb panels fabricated with the new brazing alloys will be determined and compared with existing data. A thermal shock test will be developed using PH15-7Mo panels and other types of honeycomb panels will be compared. Stretch forming of resistance welded L605 and Rene 41 honeycomb panels will be evaluated.

Efforts to use explosive forming of the inner skin of the inner shell of the command module will be continued as tests parts become available.

A typical section of the radiator fabricated with roll-bond skins will be manufactured to determine bonding and other manufacturing problems before this design has been firmed.

Portable tube brazing and welding equipment will be developed and evaluated.

Strength of various joint designs will be determined.

RELIABILITY

NASA RECOMMENDED SEQUENCER

A preliminary evaluation of the NASA recommended design for the Apollo propulsion system sequencer is complete. Rocketdyne experience with the Thor and Atlas sequencer, which employs relays, demanded that solid-state devices be used for the Saturn S-II. Although the vibration and thermal stresses encountered by the S-II unit are greater than Apollo stresses, the higher reliability requirements for Apollo indicate that S&ID should employ solid-state devices.

ELECTRONIC SUBSYSTEM

A study to determine the use of electronic subsystems in meeting reliability and crew safety requirements was completed. Subsystems investigated included navigation and guidance, stability and control, and telecommunications. Three approaches were considered: (1) use of off-the-shelf electronic parts, such as those used in the Polaris guidance subsystem, allowing for reasonable growth in reliability of these parts; (2) use of Minuteman parts at interim (7000 hour) reliability objectives; and (3) use of Minuteman parts and a redundant computer. Redundancy was not included in the first two approaches. From this study, the following conclusions were drawn. (1) Employing the techniques listed herein, electronic subsystems can achieve the reliability requirements for Apollo. (2) Minuteman parts and alternate modes of operation employing the GOSS complex and manned override provisions must be employed. (3) Major component redundancy is of little advantage and should be avoided. (4) Assurance of achieving reliability objectives will probably require the use of low-level redundancy (circuit boards) and on-board maintenance and spares.

MATHEMATICAL RELABILITY MODEL

A mathematical reliability model based upon Monte Carlo techniques has been developed to relate equipment reliability to spacecraft mission success and crew safety reliabilities. Although the accuracy of the more detailed logic model cannot be achieved by employing this approach, simplicity in use and greater flexibility are claimed as the major advantages. As an example, only minor changes in the input data will be required to account for configuration changes. Print-outs will include, in addition to mission success and crew safety numerics, probability statements regarding

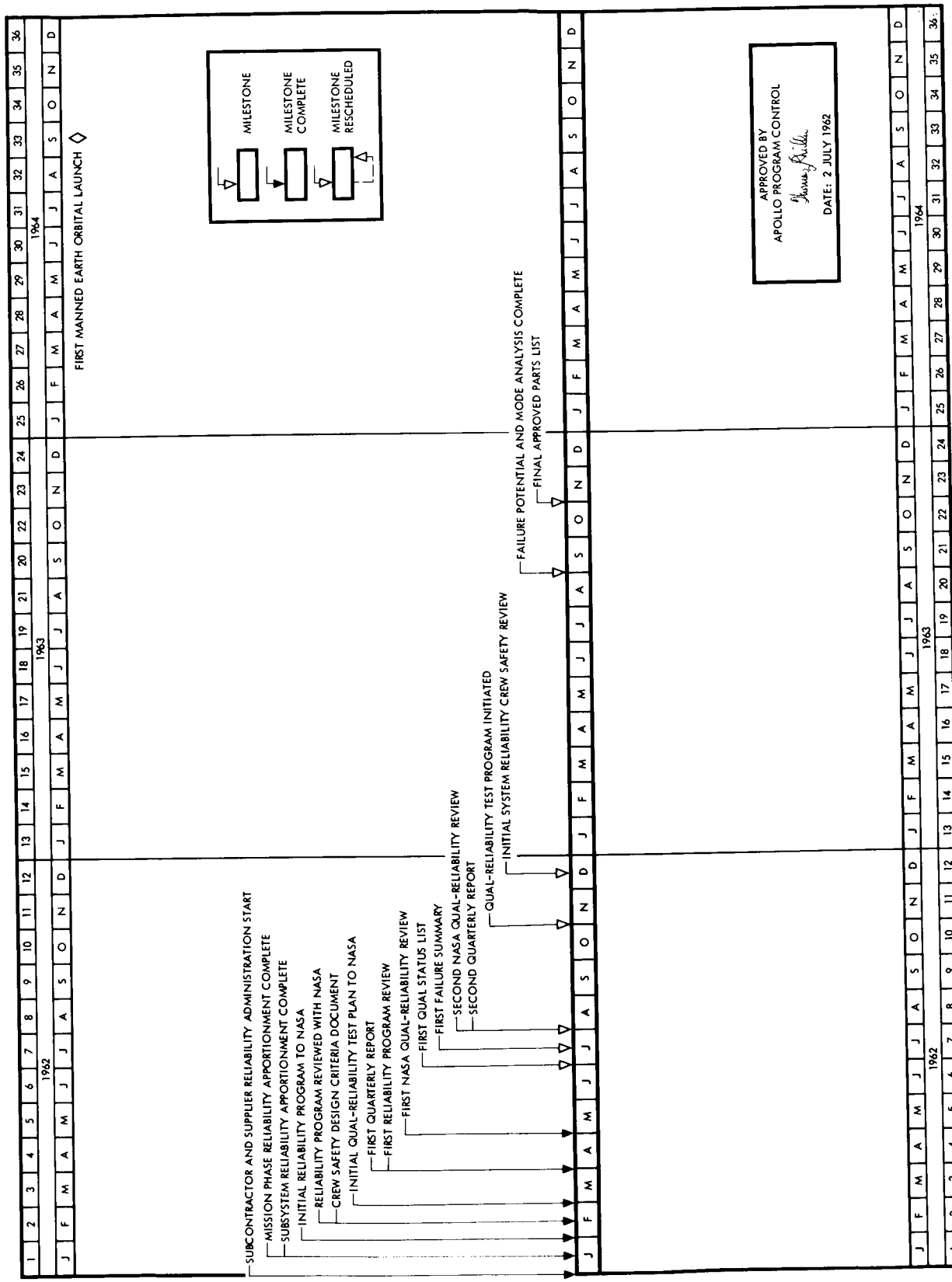

GENERAL ORDER DEVELOPMENT SCHEDULE—RELIABILITY—G. O. 7123

the influence of any component in aborting a mission or inducing a safety hazard. This model will permit an evaluation of the effects on the spacecraft of variable reliability in a component. The program will also provide information for on-board maintenance studies, including those limitations imposed by a definite number of on-board spares.

GOSS REQUIREMENTS

The reliability requirements for the GOSS Equipment Requirement Specification have been defined. An apportionment of 0.999 was assigned as the probability that the complex would function for a specified time under environmental conditions. The complex is considered to be in operation if at least one remote station can maintain tracking and telecommunications links with the spacecraft.

ELECTRICAL SYSTEMS

A reliability analysis of various fuel cell reactant supply configurations was performed to determine an optimum configuration. The recommended configuration reduced the complexity from 46 to 25 for components, 44 to 30 for leak points, and 15 pounds to 10 pounds for weight with only a slight decrease in reliability (0.00018 difference).

QUALIFICATION-RELIABILITY TEST MODELS

Methods are presently being developed to determine the reliability of one-shot, high-cost devices when only small sample sizes can be justified for testing. The technique is based upon stress versus strength and performance margin concepts and can yield high confidence statements about the demonstrated reliability. The stress versus strength technique is also being evaluated to define its applicability to the qualification-reliability demonstration program for other devices including structures, heat shields, electromechanical equipment, and electronic equipment.

COMBINED SYSTEMS STUDY

A study was completed on the advisability of integrating radiators for the environmental control and electrical power subsystems. This analysis resulted in the conclusion that a nonintegrated approach was advantageous for the following reasons:

1. The latter was subject to fewer first-order failure modes.

2. There is a greater tolerability to failures.

3. System interactions are precluded.

EARTH LANDING SYSTEM

A reliability evaluation of comparative earth landing systems was performed to evaluate probability of crew survival in the event of a pad abort. The systems evaluated and their order of descending reliability are as follows:

1. Separately deployable parachute cluster, launch escape system, and personal parachutes for crew

2. Paraglider, launch escape system, and personal parachutes for crew

3. Separately deployable parachute cluster and ejection seats for crew

4. Paraglider and ejection seats for crew.

NASA/S&ID DOCUMENTATION REVIEW MEETING

A review of the Apollo Qualification-Reliability Test Plan was conducted on 17 and 18 May at NASA Headquarters, Washington, D. C. Through mutual agreement, the test plan is to be revised to further emphasize off-limit, parameter variability, life, and mission profile simulation tests. Although these were contained in the previous issue of the test plan, only minor treatment was afforded each. Additional reorientation is required to show employment of factorial and other experimental designs as exploratory tests in the event that difficulties are encountered during qualification or reliability testing. The revised plan will define minimum test programs for each of the spacecraft subsystems.

Subcontractor Coordination

The first of a series of regularly scheduled monthly reliability meetings were held with Northrup-Ventura and AiResearch. Plans are underway to initiate similar meetings with all subsystem contractors. The purpose of these meetings is to review reliability progress at scheduled intervals, establish customer-subcontractor lines of communication at the working level, and to consider possible solutions to various reliability problems.

[redacted]

Fuel Cell

Discussions were held between S&ID Design and Reliability personnel and Mr. L. Steinhard of NASA. As a result of these discussions, S&ID will conduct an investigation of the ramification of interconnecting fuel cell modules to improve overall reliability; and will intentionally introduce impurities in the electrodes during the electrode development program to determine the degrading effects upon performance. Reliability improvements associated with the former recommendation are being investigated, and design personnel will be requested to explore the possibility of the latter with Pratt & Whitney.

Reapportionment Study

Reliability apportionment studies for the Apollo spacecraft utilizing the universal service module configuration is now in process. It is planned that this apportionment will be included in the Second Quarterly Reliability Status Report due to NASA on 31 July. As a first step in this study, a reliability model is being prepared. The mission is being divided into six phases and the necessary functions for each of these phases is being defined. The equipment necessary to perform each of these functions, including the redundancies and alternate modes of operation, will also be defined. Employing this model, the levels of equipment reliability and MTBF's necessary to meet mission requirements will be determined.

Circuit Analysis Methods

To standardize reliability circuit analysis studies and to assure that essential information is consistently recorded, a general format for computer circuit analysis reporting has been developed. The required contents, such as schematic drawing number, parts list, equivalent circuit diagram, computer program printout, and presentation of results, are delineated. It is intended that S&ID and subcontractor studies will follow this format.

Propulsion System Test Plan

Apollo design and reliability engineers met with NASA to discuss a preliminary draft of the Aerojet Test Plan for the mission propulsion system. The plan describes most of the tests to be performed; and although it does require additional detail, NASA personnel are in general agreement with the concept presented.

Education

The first draft of the general Subcontractor Reliability Education plan has been revised and is now being edited. Specific items being prepared

[redacted]

within this plan include the Apollo Reliability Program Plan, a high reliability parts sysmposium for subcontractors, and a briefing on the Apollo Qualification-Reliability Test Plan. Briefing material will also be used to indoctrinate S&ID personnel.

Training

Students who are attending the current "Computer Methods for Electronic Circuit Analysis" course have been receiving individual instructions on programming techniques in the operation of Recomp II equipment. Groups of six students receive actual experience in solving problems on this computer. Course attendance has averaged 33 students since initiation.

QUALITY CONTROL

Quality Control Documentation Requirements To NASA

The S&ID final Quality Control Plan (SID 62-154) was submitted to NASA in May for approval. The plan will be updated periodically. A flow diagram of inspection points for each major system has been updated and will be submitted to NASA as part of the plan. The diagrams will be updated with information on specifications to which articles will be inspected or tested as systems, design, and associated specifications are made available. It was agreed by NASA that the End Item Test Plan be eliminated as a separate documentation requirement. The plan is to integrate the end item test data into the Quality Control Plan and the General Test Plan. A letter confirming this agreement was forwarded to NASA on 9 May 1962.

To meet NCP 200-2 requirements for process control procedures, the equivalent S&ID procedures, identified as quality control specifications, were systematically reviewed to determine those applicable to the Apollo program. Eighteen specifications were forwarded to NASA prior to 30 June; others will be submitted when review is complete and their applicability has been determined; and new specifications will be submitted as they are developed.

A plan is being developed to determine which inspection, measuring, and test equipment procedures are used on the Apollo. These procedures will be identified, initial summation will be made, and a continuing system of submittal will follow as these procedures are developed.

Quality control operating procedures that apply to the Apollo program have been revised to reflect the quality provisions contained in NCP-200-2. Copies of the revised manual have been forwarded to NASA. In addition, there are six procedures in work.

Work has been in progress to determine the requirements of a data collection system for the Apollo program. The type of data involved is being clarified, and a plan of action and data package will be developed and submitted to NASA for a review.

Training And Certification

Apollo quality training needs were determined, developed, and implemented in the areas of soldering, nondestructive testing, welding, and quality control orientation. S&ID Apollo quality control personnel are being given a 40-hour training course in soldering reliable electrical connections to NASA requirements. Action has also been taken to assure internal compliance with MSFC-PROC-158 by the development of two soldering specifications. S&ID has reminded the major subcontractors of the requirements of NASA to assure that proper training methods are instituted on a timely basis. In addition, new procurement specifications will reference MSFC-PROC-158 as an applicable document; and previously released procurement specifications will, in their first revision, make MSFC-PROC-158 an applicable procedure. The course for training and certifying welding inspectors is 40 hours and Apollo personnel are being given the course.

The welding of the spacecraft escape tower required special certification for the fusion welders. The quality control laboratory developed the joints and thickness of material for these specifications to simulate actual production welding for the certifications.

Familiarization sessions have been conducted for Apollo personnel on the use of inspection sign-off books using both the Quality Control operating procedures and S&ID Policies and Procedures Manual as information sources. All inspectors have attended inspection test instruction briefings conducted by Quality Engineering. Indoctrination classes were held for Apollo personnel stressing reliability and briefly explaining form and function of the various major parts of the Apollo system.

A training control report, Number 65, "Training Course Contents For Quality Control Personnel", is published and outlines the training program requirements for quality control personnel. It establishes the basic training requirements in accordance with related quality activities.

Review Of Subcontractor Documentation

Apollo Quality Control departments have reviewed the quality control plans of nine major subcontractors in order to assist them in the development of these plans. Approvals have been given to Minneapolis-Honeywell,

Collins Radio, AiResearch, and Lockheed. Meetings were held between representatives of six subcontractors and S&ID quality control personnel to work out deficiencies in the various plans. Quality control activities have also reviewed, and comments on 76 other types of approval documents have been submitted.

Inspection Planning

As part of the over-all quality planning for the Apollo, Quality Engineering instituted a procedure by which that department reviews all planning tickets for the purpose of ensuring specific instructions concerning the objectives of the inspection or test, the listing of equipment to be used, and the inspection acceptance criteria. Complementing the above review, quality engineering developed an inspection test instruction sheet, which includes specific instructions on the objective of the inspection or test, the equipment to be used, exact operations to be performed, and criteria for passing or failing. In keeping pace with the release of engineering drawings and production planning orders, Quality Engineering has reviewed 3359 production orders to ensure that proper quality provisions have been incorporated. In addition, 48 inspection test instruction sheets have been prepared to supplement the production orders.

Inspection

Using the experience gained on the assembly of the first command module skins, temporary holding fixtures were devised and used in the weld and trim phases of skin assembly on subsequent modules. This has improved the quality of work by enabling the contour and mold lines to be more easily held to drawing configurations.

Problems inherent in the inspection test instruction sheets evolve because preplanned sequences cannot always be followed. To alleviate this condition and to provide expedient support for the fabrication and inspection departments, a quality engineer is assigned to floor operations on each working shift. The results are workable and are improving with experience.

Some quality problems were encountered involving craters and cracks that appeared at the start and finish of welds made with the metal inert gas technique. Additional tooling was ordered to remedy these problems.

Longitudinal wave ultrasonic inspection techniques employing a Sonofax system will be used to nondestructively inspect adhesive bonded honeycomb structures for the Apollo command and service module.

Design Reviews

Quality Control participation in the design/reliability analysis and design/review programs was initiated during this report period, and the rate of progress of this program is consistent with the design status. The quality engineer assigned to each system is working on an informal day-to-day basis with Reliability Engineering in order to provide input during early stages of design. All contracts with designers are made by or through the Reliability group. Questions and/or problems that are not resolved by this effort will be referred to the second-level reliability/crew safety review board, which is now being implemented.

Traceability, Serialization, and Lot Control

S&ID is developing its plan for serialization and traceability. The plan for the identification of parts defines those items to be controlled. The proposed system will afford individual parts identification of the gross AN, AND, NAS, and MS exemption list.

Audit

A quality control audit program has been developed to furnish NASA with a tangible means of review of the completeness of S&ID quality control methods. The areas of administration, procedures, production, and personnel are being audited through the use of over 120 audit check lists, which are developed and assigned for application to each functional area. Corrective action follow-up is being maintained to provide a closed-loop system. As the operation rate of the program progresses, audit will be accelerated in proportion to the general proportion to the general program activity.

Procurement Specifications

Procurement specifications are reviewed and approved by quality engineering prior to release by procurement. There have been preliminary reviews of 36 specifications and final review and approval of 15 specifications.

INSTRUMENTATION

Preliminary trade-off studies have been completed in conjunction with the system dynamics group as to possible shock and vibration isolation for the main display console.

A layout showing the volume and configuration for the right-hand control console was completed.

Installation feasibility studies of the various display instruments based on the instrument layouts from life systems have been conducted.

The main display console installation concept is reflected in a drawing which shows the integration of structure, coldplates, and harness routing.

A full-scale mock-up of the lower equipment bay is in fabrication. This mock-up will be used to demonstrate aspects of mechanization and to aid life systems in carrying out man-machine relationship studies in regard to in-flight maintenance.

A preliminary connector test plan will be completed. Typical connectors will be procured and tested within the required environmental parameters. A study will be made of the operation of connecting and disconnecting connectors and noise phenomena associated with connectors in a hard vacuum.

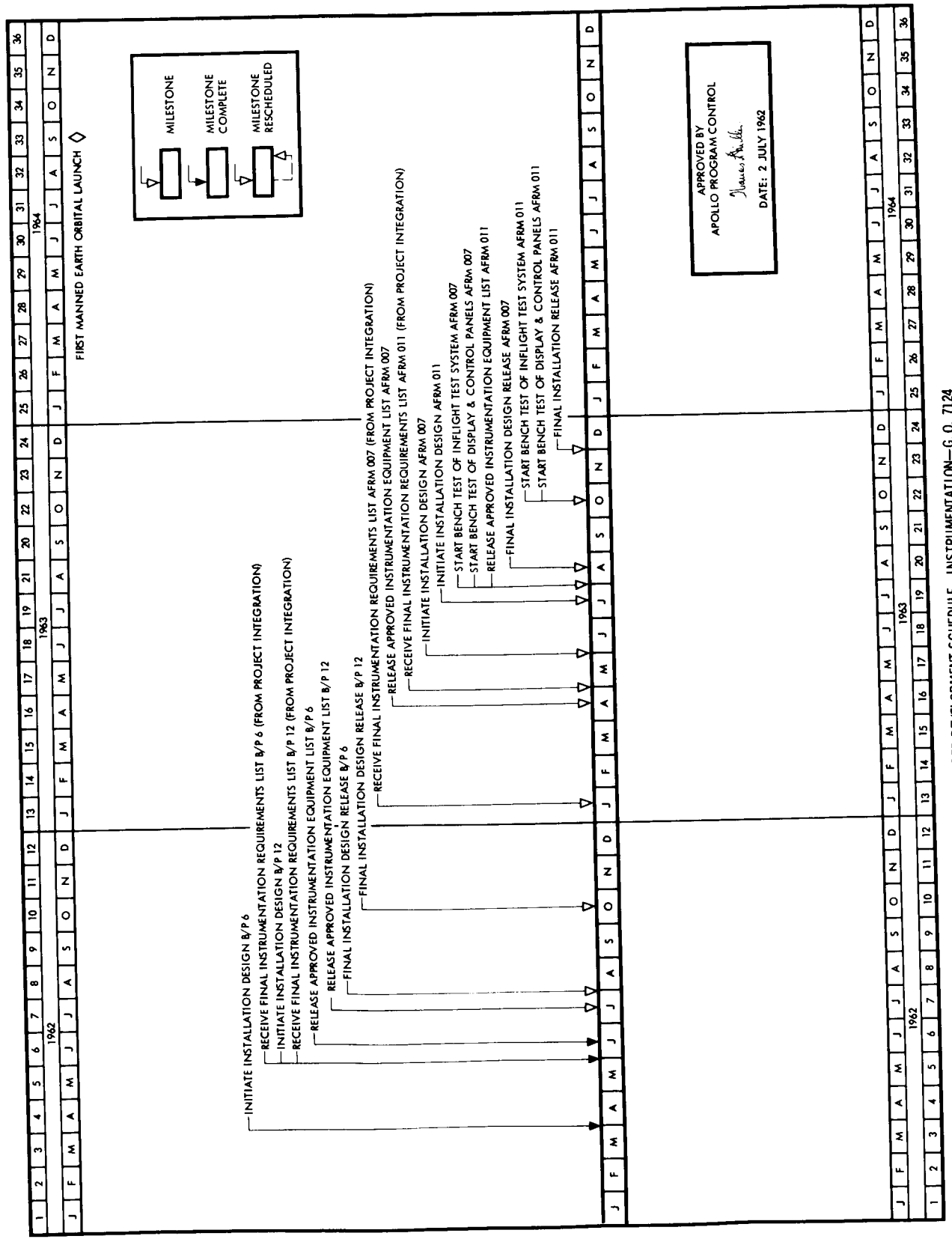

GENERAL ORDER DEVELOPMENT SCHEDULE—INSTRUMENTATION—G. O. 7124

TRAINING AND SIMULATION

TRAINING MANUALS AND PLAN

SID 62-162, Apollo Training Plan, was released on 31 May 1962. The revised plan contains considerably more detail than the initial plan and includes a "Contractor Participation" section. Progress is being made toward a decision as to what specific training will be used and who will provide the instruction. It is anticipated that during the next quarter, decisions in this area will be confirmed.

The major training analysis effort has been the coordination of the formats and requirements related to maintenance and task analyses. Life Systems personnel will produce the initial task analysis information by 1 August 62, which would then permit further training course development and programming for flight crew operations personnel and flight operations personnel. Maintenance tasks analyses from Logistics Engineering will be provided as completed to permit further development of preflight operations training programs. In addition, a handbook entitled "Course Materials Procedures" has been prepared and published for use by all instructors preparing logistics training courses, to promote standardization within the department.

Trainer instructor manual preparation effort has been directed toward the preparation of style and format guides for use by all instructor-writers and toward establishment of in-house coordination to ensure rapid flow of accurate information from trainer designers to trainer instructor manual writers. Trainer design is firming up rapidly at this time, and the next quarter should produce meaningful first drafts of all trainer instructor manuals.

Considerable effort has been expended on the preparation of specific work flow diagrams and schedules for each assigned task. Coordination with all interfacing agencies depicted on the schedules is underway. PERT networks will be modified to provide continuity with individual task schedules. Informal instruction periods on course documentation procedures and techniques for the instructors are planned for the immediate future. Initial outlines for systems courses should be completed for dry-run during July and August.

Initial flight crew units of training and initial flight operations personnel training programs will be developed during the next quarter.

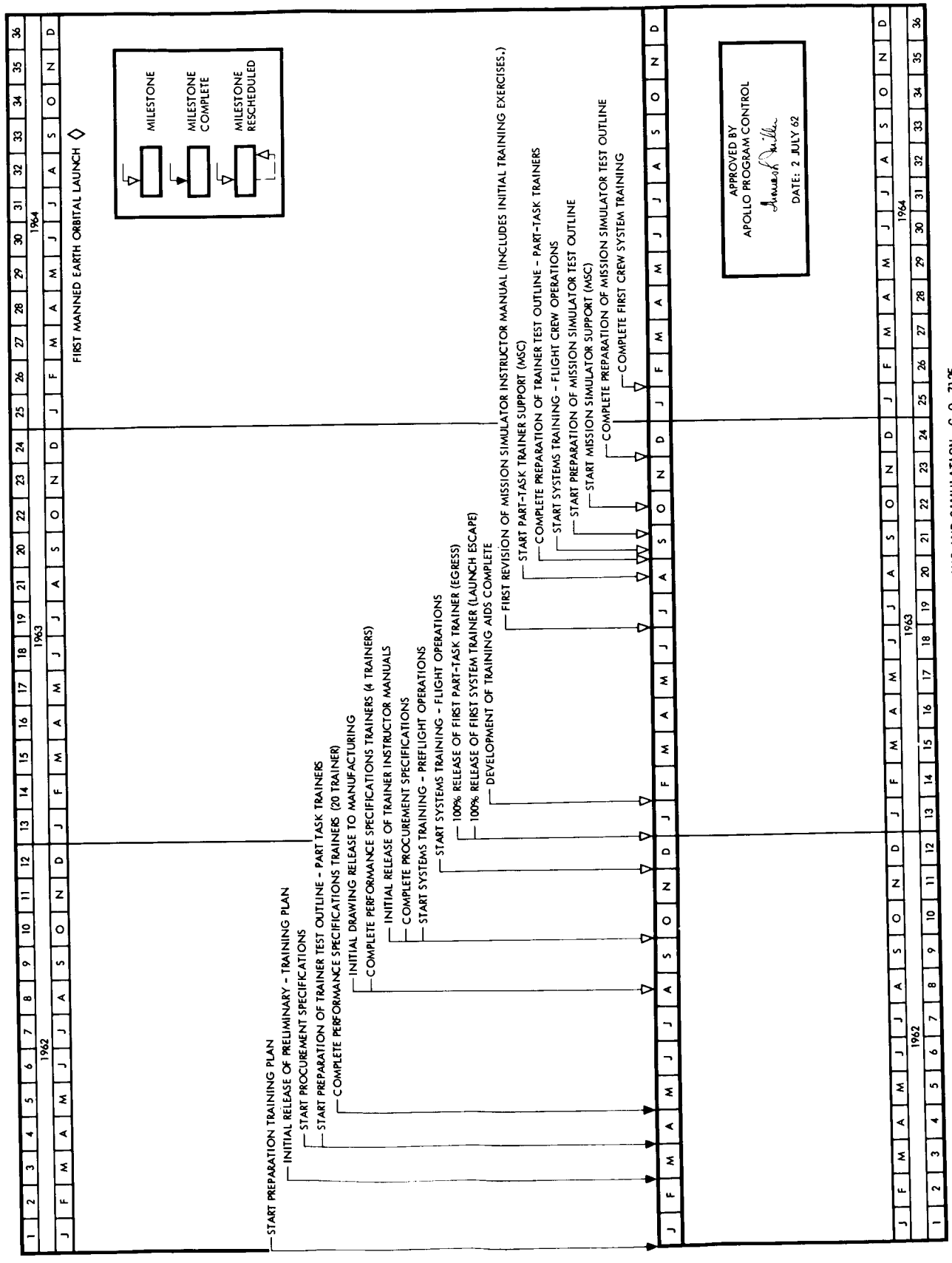

GENERAL ORDER DEVELOPMENT SCHEDULE—TRAINING AND SIMULATION—G.O. 7125

[redacted]

TRAINING AND SIMULATION

Manufacturing activity on the Apollo trainers during the second quarter has been limited to preplanning until firm requirements are received from NASA. The go-ahead for design action was received from NASA on 23 May and numerous drawings are in process. Initial release of these drawings is scheduled for 18 August. The part-task trainers and the systems trainers, with the exception of the earth landing system trainer, have been approved in principle. Of the crew survival trainers proposed by S&ID, only the egress trainer has been approved.

[redacted]

SPACECRAFT TEST OPERATIONS - DOWNEY

HOUSE SPACECRAFT AND TEST PREPARATION AREA

Effort, during this quarter, has been in the consolidation and refinement of test plans, facility requirements, GSE requirements, manpower requirements, and organizational structure.

Conferences have been held to discuss the problems created by using cryogenic fluids in the house spacecraft and test preparation areas. A committee has been established to determine test requirements, associated GSE, and the facility requirements for utilization of the gaseous fluids in the fuel cells and the environmental control system (ECS).

The house spacecraft and test preparation program plans will be issued during the next quarter period. These plans will include material pertinent to the detailed test plan appendices for the General Test Plan (SID 62-109).

Coordination will continue in all areas with particular emphasis on the cryogenics handling and storage problem as associated with the Building 6-A safety requirements.

An interim test area for the test preparation activities will be selected for use prior to the completion of Building 6-A. Present schedule calls for acceptance of boilerplate 3 on 1 September 1962 in the interim test preparation area.

Further study and review of definitive engineering requirements for the Apollo General Test Plan (SID 62-109) will continue.

FLIGHT DROP AND RECOVERY TESTS

The Northrop-Ventura Test and Facility Plans have been revised during this quarter to reflect system design and performance changes.

Douglas Aircraft has been authorized to proceed on a week-to-week "design only" basis for modification of a C-133A aircraft to be employed as a drop aircraft capable of carrying an Apollo command module. NASA has requested that S&ID conduct a special investigation on a drop carrier other than the C-133A aircraft. This special investigation has been initiated and will include other carrier aircraft, helicopters, and balloons.

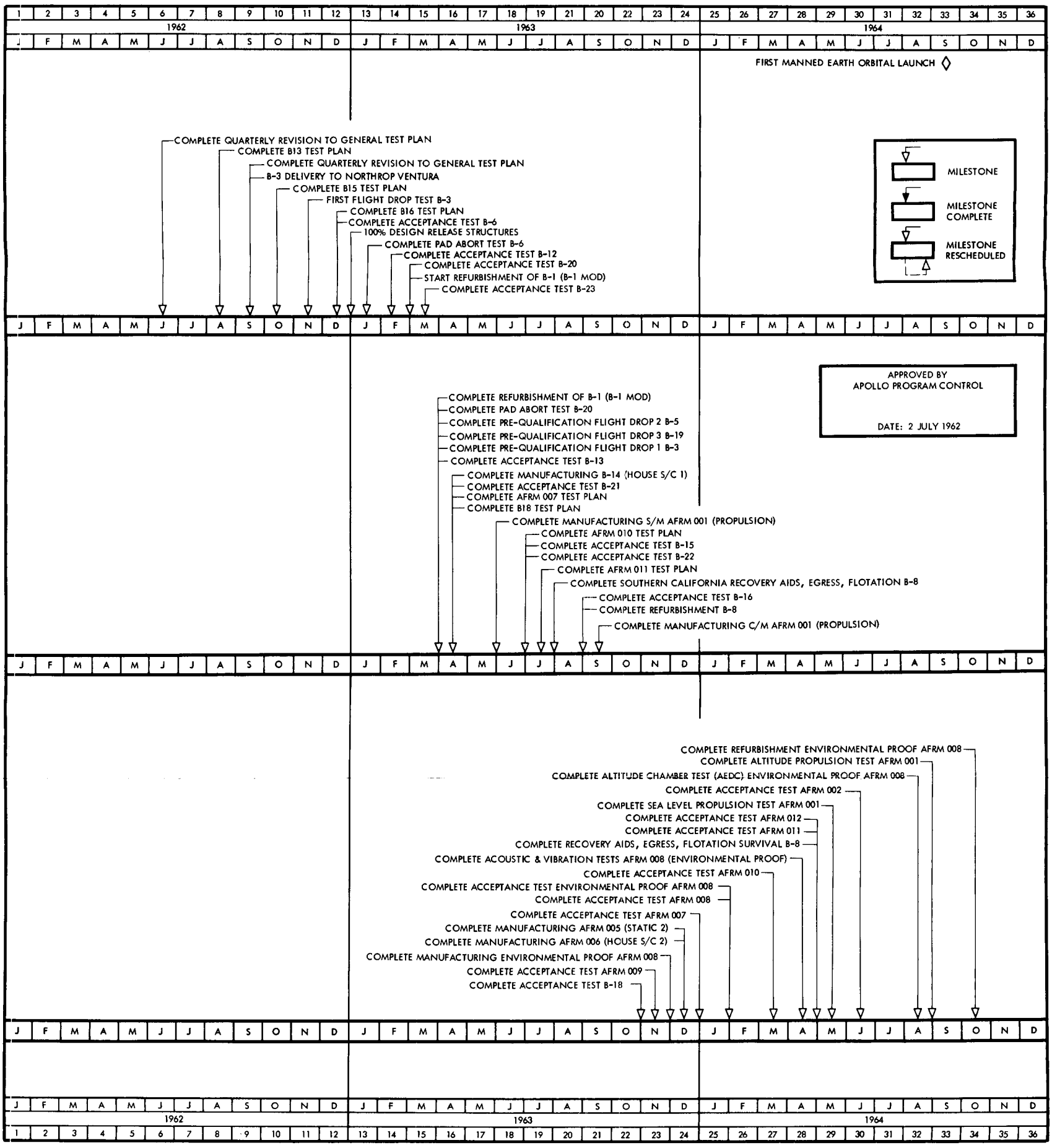

GENERAL ORDER DEVELOPMENT SCHEDULE—SPACECRAFT TEST OPERATIONS, DOWNEY—G. O. 7126

NORTH AMERICAN AVIATION, INC.
SPACE and INFORMATION SYSTEMS DIVISION

Coordination of recovery mission test plans regarding measurement requirements, GSE, systems configuration, logistic support, and facility requirements is being conducted.

The Northrop-Ventura test plan will be revised to reflect the design changes of the parachute subsystem and sequencing operations.

The recovery mission will be analyzed with respect to normal and contingent planned landing areas, emergency recovery procedures and equipment, and the Department of Defense Recovery Group Dispersal Plan.

ENVIRONMENTAL SPACECRAFT

Effort during this quarter was in the coordination of general program planning, scheduling and support requirements, organization structure, program cost, PERT network, and GSE requirements. Test support requirements were reviewed in conjunction with this effort.

Contractor personnel presented briefings on the proposed use of the Arnold Engineering Development Center (AEDC) space environmental simulation chamber to both NASA and AEDC personnel. Preliminary investigation determined that the basic chamber capabilities, with the exception of vehicle mount and solar simulation (illumination area), will meet the Apollo test requirements for earth-orbital flights.

During the next period, major efforts will be the initiation of the detailed test plans and support requirements and the resolving of the AEDC environmental chamber compatibilities. A further study will be required to determine the effect of the solar illumination area and the possibility of using additional energy sources to obtain the correct vehicle energy balance. This study should be completed during the next quarter so that any major chamber rework request can be initiated.

APOLLO-SATURN TEST PROGRAM

The PERT Network dwell times for SA-5 through SA-111 were adjusted to be compatible with the schedule specified in the Apollo Master Phasing Plan, dated 25 April 1962. These estimates of time intervals to complete the required test operations can be adequately evaluated only when the complexity of systems have been established and the checkout procedures determined.

Effort has been expended to establish a C-1 configuration "Typical Manned Spacecraft Flow Diagram" for AMR.

The detailed test plans for SA-5 and SA-6 are being prepared.

[redacted]

The telemeter ground station requirements and utilization are being reviewed. Technical support has been given to the Apollo GSE for the regular biweekly coordination meeting with NASA.

The measurement requirements lists for SA-5, -6, -7, and -8 have been determined and compiled.

Maintaining, updating, and coordinating will continue on the C-1 configuration Typical Manned Spacecraft Flow Diagram during the next period.

Completion of the detailed test plan for SA-5 is scheduled for September 1962. In addition, effort will be expended on SA-6 and SA-7 detail test plans. In conjunction with these test plans, work will be initiated on detailed checkout and countdown procedures for SA-5. These procedures will be used for modular systems and integrated systems checkouts.

SERVICE PROPULSION TEST PROGRAM

During this period, it was determined that the spacecraft propulsion test program to be conducted by S&ID will include the evaluation of the combined propellant and rocket engine propulsion systems and an investigation of interactions of the spacecraft systems associated with propulsion control and display. A service propulsion test fixture, F-2, will be used for the initial service propulsion system development tests and as a workhorse item to support the propulsion test spacecraft (AFRM 001).

Test requirements were compiled for an altitude chamber test program with AFRM 001. These data were used in briefing the NASA and AEDC personnel on chamber requirements in meetings at Houston and at AEDC on 12 and 13 April. Subsequently, engineering studies have determined that the RCS jet impingement tests planned for this program will require vacuum conditions exceeding the capabilities of these chambers. Since the RCS exhaust thermal flow fields will, therefore, be investigated by other methods, studies are being conducted to determine the feasibility of integrating the S&ID propulsion systems altitude test requirements into the rocket engine manufacturer's development tests.

If the test objectives for the combined propellant engine system altitude operations can be met, as listed above, the requirement and associated expense of installing spacecraft (AFRM 001) in the AEDC rocket engine test chamber can be eliminated.

Preliminary instrumentation lists have been compiled, and a data acquisition performance specification has been prepared.

The data acquisition system performance specification will be submitted for system procurement actions.

ABORT TESTS

Preparation of detailed test plans for pad abort testing were documented in the General Test Plan.

Facility and data requirements for the range support effort to conduct the pad abort tests, Little Joe II max q, and high-altitude tests at White Sands Missile Range (WSMR) have been completed and forwarded to NASA.

Refinement of the pad abort detail test plans will be accomplished during the next period. In addition, preparatory effort will be to accumulate and evaluate requirements for the preparation of Little Joe II detail test plans.

TEST PROGRAM COORDINATION

The facilities criteria are being established by Apollo plant engineering and systems test for the service propulsion test program to be conducted at the Jornada Experimental Range located at WSMR. These criteria are being established by use of Rocketdyne data and previous reports prepared for other test site locations.

The facilities criteria for the pad abort and Little Joe II test programs have been established based on the utilization of the WSMR. The requirements for work and resources (RFWAR) have been prepared and submitted to NASA.

DATA ENGINEERING

The data plans have been prepared for the pad abort, Little Joe II max "q", SA-5 tests, and prequalification flight drop program.

The subcontractor proposals submitted for the Apollo Data Processing System have been reviewed. Briefings by the prospective suppliers were attended during this period. Selection of a subcontractor to supply the required data processing system will be made during the next report period. Effort will include refinement of the statement of work and system performance.

Support of the prequalification flight drop test program will continue during the next report period and will include data engineering coordination between Apollo engineering, subcontractor, and the test range.

[redacted]

GENERAL

The logic and time interval PERT networks for the Apollo-Saturn test program spacecraft environmental proof test program, prequalification drop test program, house spacecraft tests, and service propulsion test program have been completed.

Primary effort during the next period will be the review of the general test concept with NASA after the NASA review of the reissued General Test Plan (SID-109), dated 15 June 1962.

The Apollo General Test Plan (SID 62-109) will be revised, and these revisions will be submitted to NASA on 15 September 1962.

Effort will be continued to up-date all facility and test equipment requirements to enable costing to be as comprehensive as possible.

DOCUMENTATION

The following S&ID documents were published during April, May, and June:

(2) Pretest Report for the 0.02-Scale Apollo Heat Transfer Model (H-1) in the 21-inch JPL-HWT (Revised), (SID 62-354)
(2) Reliability Program Plan, (SID 62-203)
(6) Quality Control Plan, (SID 62-154) Rev V
(1) Quarterly Progress Report, (SID 62-400-1)
(1) Drawing List, (SID 62-384-3)
(1) Maintenance Plan, (SID 62-202)
(1) Transportation and Handling Manual, (SID 62-435)
(3) Ground Operational Support System Equipment Performance, and Interface Specification, (SID 62-77)
(3) Telecommunications Subsystem Specification, (SID 62-86)
(1) Flight Crew Performance Specification, (SID 62-90)
(1) Spacecraft Systems Monitoring Personnel Performance Specification, (SID 62-91)
(1) Earth Landing System Trainer, (SID 62-496)
(1) Electric Power Supply Subsystem Trainer, (SID 62-497)
(1) Command Module Reaction Control Subsystem Trainer, (SID 62-498)
(1) Service Module Reaction Control Subsystem Trainer, (SID 62-499)
(1) Launch Escape Subsystem Trainer, (SID 62-500)
(1) Communications Subsystem Trainer, (SID 62-501)
(1) Service Module Propulsion Subsystem Trainer, (SID 62-502)
(1) Instrumentation Control Subsystem Trainer, (SID 62-503)
(1) Environmental Control Subsystem Trainer, (SID 62-504)
(1) Navigation and Guidance Subsystem Trainer, (SID 62-505)
(1) Stabilization and Control Subsystem Trainer, (SID 62-506)
(2) Egress Trainer, (SID 62-507)
(1) Weightlessness Procedures Trainer, (SID-508)
(1) Lunar Base Operation Trainer, (SID-512)
(2) Monthly Weight and Balance Report, (SID 62-99-3)
Training Equipment Requirements for Apollo Spacecraft (Resubmitted), (SID 62-358)
Mathematical Outline For Design of Apollo Crew Training Equipment (Resubmitted), (SID 62-387)
Design Review Briefing (NASA request), (SID 62-401)

[redacted]

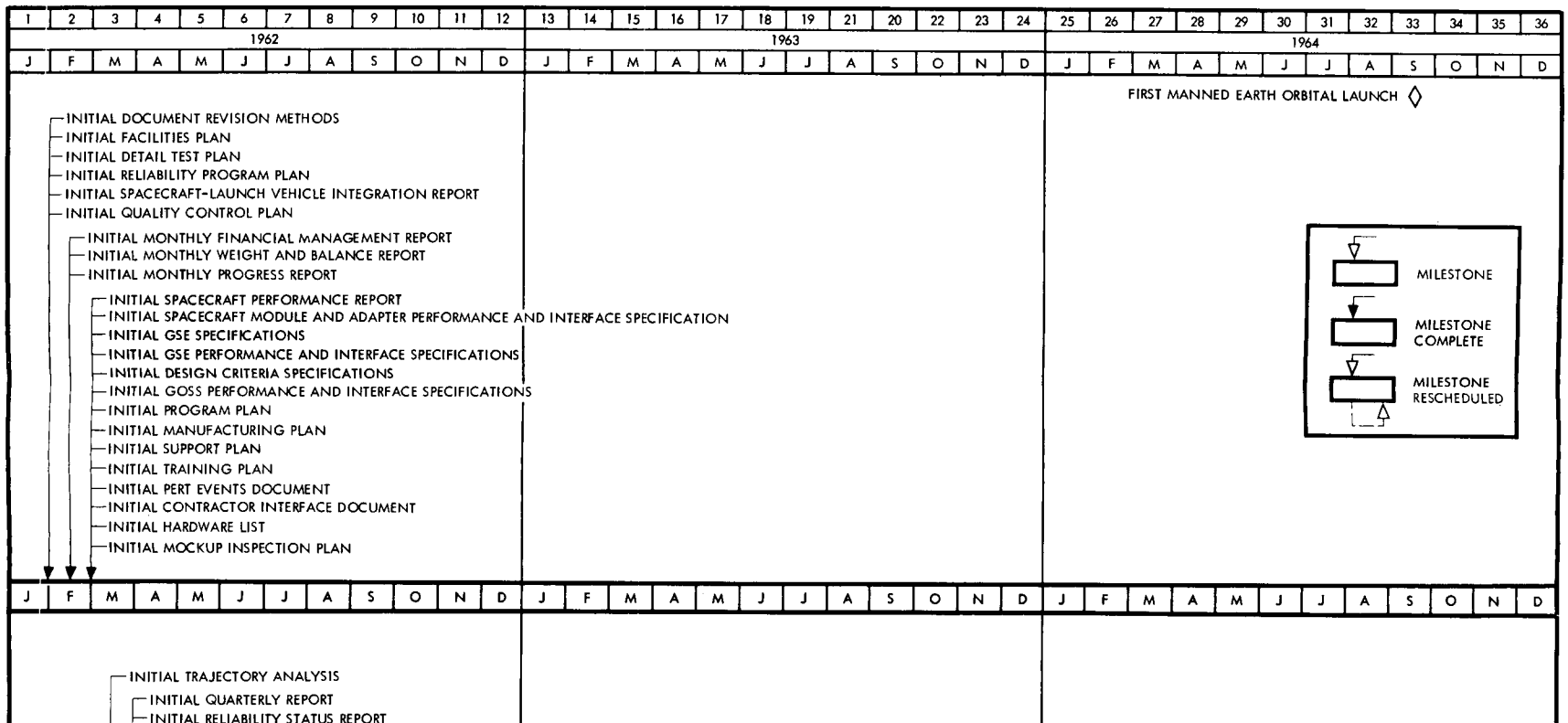

GENERAL ORDER DEVELOPMENT SCHEDULE - DOCUMENTATION - G.O. 7128

NORTH AMERICAN AVIATION, INC.
SPACE and INFORMATION SYSTEMS DIVISION

(2) Data Report For Wind Tunnel Tests (JPL 21-98) of Apollo Models FS-1 and FS-7 (NASA request), (SID 62-423)
Contract Data (Revised), (SID 62-460)
(2) Apollo Wind Tunnel Program Report (Revised), (SID 62-170-2)
Contractor Interface Documents (Revised), (SID 62-270)
(2) Pretest Report for Apollo Force Model FS-412 in the AECD VKF Hotshot II, (SID 62-424)
(2) Parachute Recovery Subsystem Specification, (SID 62-78)
(2) Crew System Subsystem Specification, (SID 62-81)
(2) Command Module Reaction Control Subsystem Performance Specification, (SID 62-542)
(2) Service Module Reaction Control Subsystem Performance Specification, (SID 62-541)
(2) Launch Escape Subsystem Specification, (SID 62-88)
(2) Environmental Control Subsystem Specification, (SID 62-82)
(1) Apollo Model (FS-1) Wind Tunnel Test (JPL 20-493B), (SID 62-486)
OK Revised Qualification Reliability Test Plan, (SID 204)
(2) Quarterly Reliability Status Report, (SID 62-557) 1st
(1) Pretest Report for a 0.030-Scale Apollo Dynamic Stability Model (FD-1) in the JPL Wind Tunnel, (SID 62-549)
(1) Data Report for Apollo Models FS-1 and FS-7 Wind Tunnel Test (JPL 20-495), (SID 62-547)
(1) Propulsion Control Trainer (Preliminary), (SID 62-509)
Apollo Space Suit Interface Specification, (SID 62-319)
(1) Attitude Control Trainer Specification, (SID 62-514)
(2) Ground Support Equipment Performance and Interface Specification Volumes I through IV, (SID 62-57)- Rev
(1) Drawing List, (SID 62-384-4)
(2) Electrical Power Subsystem Specification, (SID 62-83)
(2) Preliminary Spacecraft Performance Specification Project Apollo Stabilization and Control Subsystem, (SID 62-85)
(5) Monthly Progress Report, (SID 62-300-3)
(2) Monthly Weight and Balance Report, (SID 62-99-4)
Project Apollo Still Photographic Submittal No. 1, (SID 62-566-1)
Project Apollo Still Photographic Submittal No. 2, (SID 62-566-2)
(2) Pretest Report for the 0.045-Scale Apollo Heat Transfer Model H-2 in the AEDC VKF, (SID 62-614)
(3) Quality Control Plan, (SID 62-154) Vol II
(2) Egress Trainer Specification, (SID 62-507)
need more - OK Spacecraft Performance Specification (Revised), (SID 62-51)- Rev.
(2) Command Module Specification (Revised), (SID 62-52)
(2) Service Module Specification (Revised), (SID 62-53)
(2) Ground Support Equipment General Equipment Specification (Revised), (SID 62-50)- Rev
Need More - (1) Apollo Design Criteria (Revised), (SID 62-65)

(1) Midcourse Correction Trainer Specification, (SID 62-513)
(Mission Simulator Trainer Specification, (SID 62-515)
Mission Propulsion Subsystem Specification, (SID 62-80)
(1) Navigation and Guidance Subsystem Specification, (SID 62-84)
(1) Drawing List, (SID 62-384-5)
Earth-Orbital Trainer Preliminary Specification, (SID 62-610)
(1) Earth-Reentry Trainer Preliminary Specification Financial Management Report, (SID 62-511)
(2) Data Report for Apollo Model (H-1) Wind Tunnel Test (JPL 21-102), (SID 62-628)
Still Photographic Documentation Submittal No. 4, (SID 62-566-4)
(1) Test Plan, (SID 62-109)
PERT Event Document, (SID 62-780)
(1) Monthly Progress Report, (SID 62-300-4)
(3) Flight Operation Manual, (SID 62-786)
(2) Monthly Weight and Balance Report, (SID 62-99-5)
(1) Drawing List, (SID 62-384-7)
(1) Navigation and Guidance Subsystem Specification, (SID 62-84)
(2) Pretest Report for the 0.045 Apollo Force Model FS-3 Wind Tunnel Tests in the Von Karman Gas Dynamics Facility Tunnels, (SID 62-709)
(2) Data Report for Apollo (FS-2) in the Ames Unitary Plan Wind Tunnels, (SID 62-601)
(2) Pretest Report for the 0.045 Apollo Pressure Model PS-3 in the AEDC Von Karman Gas Dynamics Facility A, B, and C Tunnels, (SID 62-752)
(2) Pretest Report for the 0.05 Scale Apollo Model FS-8 in the Cornell Astronaut Aeronautical Laboratory 48 Hypersonic Shock Tunnel, (SID 62-754)
(2) Data Report for Apollo Model FS-1 Wind Tunnel Test (SAL-204), (SID 62-753)
(1) Data Report for Apollo Model (PS-1) Wind Tunnel Test (JPL 21-100), (SID 62-548)
Appendix "A" to Facilities Plan, (SID 62-314-3)
Project Apollo Still Photographic Documentation Submittal No. 3, (SID 62-566-3)
(1) Drawing List, (SID 62-384-6)
(1) Apollo Paraglider Design Data, (SID 62-652)
Mission Propulsion Subsystem Specification (Preliminary), (SID 62-80)
(5) Revised Training Plan, (SID 62-162)
(2) Mock-up Inspection Plan, (SID 62-200) Rev.
Manufacturing Plan, (SID 62-102)
(1) Apollo Mock-up Specification 20 Antenna Radiation Pattern, (SID 62-268)
Apollo Second Quarterly Status Report, (AP-13373)

The initial revisions to the Apollo Support Plan, SID 62-96, and the Flight Operations Manual, SM2A2-03, were submitted on schedule.

Revised support manual delivery dates submitted to NASA during April but approval has not been received by S&ID. Present work statement schedules will require the submittal of Apollo support manuals 1 October 1962 and will be subject to extensive revision prior to equipment delivery.

The initial issue of the Apollo Maintenance Plan, SID 62-202, was submitted on schedule.

The Spacecraft Operations Manual, SM2A2-04; Spacecraft Description Manual, SM2A2-06; Transportation and Handling Manual, SM2A2-05; and the first revision to the Apollo Familiarization Manual, SM2A2-01, are on schedule. Work will continue during the next period.

Sample outlines for the LES manuals pertaining to system checkout, GSE maintenance, and bench maintenance have been completed. A study is in progress to determine production scheduling dates for boilerplate manuals associated with the LES. A study of prototype GSE is also being conducted to identify GSE support manual requirements.

[redacted]

[redacted]IA

PROGRAM MANAGEMENT

Contract Amendment No. 3 to Letter Contract NAS 7-90 was received and conditionally accepted; conditions of acceptance were negotiated; and a revised Amendment No. 3 was issued by NASA. This document provided $2,292,000 in funds for Apollo facilities requirements under the existing Saturn Facilities Contract NAS 7-90. During the course of negotiations on this amendment, it was agreed that the NASA PERT system and financial management reporting requirements would be alike for both the Apollo Contract NAS 9-150, when definitized, and the Facilities Contract NAS 7-90, when definitized. It was further agreed that current PERT and financial management reporting requirements on the facilities contract would be the same as those presently required under the Apollo Letter Contract NAS 9-150.

Amendment No. 3 - Supplement A to Letter Contract NAS 7-90 was received and executed by NAA. This amendment provided for new parking facilities to replace space which will be lost to Building No. 6 expansion.

Amendment No. 1 to Letter Contract NAS 9-150 was received and executed by NAA. This document increased current Apollo funding from $32,000,000 to $55,000,000 and extended the date for definitization of the letter contract to 30 September 1962.

Amendment No. 2 to Letter Contract NAS 9-150 was received and executed by NAA. This document revised the Statement of Work, Parts 1, 2, and 3; extended the period of performance to 30 September 1964; and provided a completely revised listing of mock-ups, boilerplates, and spacecraft.

Amendment No. 3 to Letter Contract NAS 9-150 was received and accepted by S&ID. This document provided for delivery to NASA of two copies each of executed subcontracts or purchase orders and all amendments thereto.

Amendment No. 4 to Letter Contract NAS 9-150 was received and revised at S&ID. This document was found in most respects to be quite satisfactory; however, acceptance of the document was judged not to be in the best interests of either the Government or the contractor. This judgment was based upon the amendment requirements for PERT associated cost reporting and provided for unilateral direction by NASA as to

[redacted]

subdivisions of work and elements of cost to be reported. S&ID indicated a willingness to enter into early negotiations on those requirements.

The definitive cost proposal effort is proceeding, and a complete preliminary first draft of a definitive contract has been prepared and distributed for comment within the company. Copies of the preliminary draft have been given to NASA MSC personnel for information purposes with the understanding that it is subject to further review at NAA and that change may be required.

ASSOCIATE CONTRACTOR RELATIONS

The Apollo associate contractor operating procedure and Apollo interface coordination and control methods document, establishing coordination procedures and methods for defining, controlling, and documenting interfaces between S&ID and MIT, have been approved by NASA, MIT, and S&ID.

The proposed navigation and guidance equipment handling procedure was discussed in the S&ID/MIT meeting on 12 June. This procedure has not yet been approved by either party pending clarification of certain accountability/responsibility areas.

S&ID requirements for navigation and guidance system equipments were submitted to NASA in a letter dated 23 May for a determination of equipment allocations and schedules for delivery. This action was required due to the inability of MIT and S&ID to reach a satisfactory agreement.

Resident representatives are being exchanged between S&ID and MIT.

Preliminary layouts of facility requirements for the MIT navigation and guidance area at S&ID have been provided to S&ID for inclusion in the S&ID facilities plan.

Effort is continuing between S&ID and MIT to place the navigation and guidance displays and controls into the allocated area. Initial PERT, GSE, integrated systems checkout, testing, and quality control discussions have been held between MIT and S&ID with coordination continuing in these areas.

The initial meeting between NASA, Convair, and S&ID personnel on the Little Joe II booster interface was held at S&ID on 25 May. Preliminary channels of communication were established and initial interface information exchanged. Actions were assigned relative to spacecraft umbilical relocation and umbilical tower modifications. Resolution of these interfaces and the definition of additional interfaces will be discussed at the next meeting to be called by NASA.

Preliminary reports have been prepared defining suggested operating procedures for the development and control of interfaces between the spacecraft and the Convair Little Joe II, and the spacecraft and the Saturn launch vehicles. These preliminary reports will be submitted and discussed with NASA in order to obtain a decision on the S&ID/MSC/MSFC launch vehicle contractor relationships.

A preliminary associate contractor operating procedure has been prepared outlining the proposed relationships between S&ID and the lunar excursion module contractor pending a NASA decision on the lunar excursion module and subsequent selection of a subcontractor.

Arrangements have been completed with NASA and Douglas for the loan of the Douglas S-IV master drilling tool for the spacecraft adapter/S-IV interface. The Douglas tool was delivered to S&ID on 25 June.

PERT

Apollo PERT systems and Apollo Program Control submitted to NASA 24 formalized General Order networks. Each network, along with its associated integrated data processing (IDP) card deck, was scheduled for submittal 1 June 1964. Activity description lists in brief form were prepared by Apollo PERT systems and submitted to NASA. These activity descriptions contained statements on all activities on the general order networks. Comprehensive activity descriptions are being prepared. These will supplement the initial submittal and are scheduled for transmittal to NASA in July.

The program management plan (PMP) milestone list will be submitted to NASA in July and bi-weekly reports against this PMP list will begin one week later.

Re-establishment of the PERT/TEAM concept is considered to be of prime importance to Apollo PERT systems. This method allows the exchange of meaningful information between NASA and S&ID.

[redacted]

Interdivision Procurement

The most significant accomplishments during the past quarter were in the area of departmental establishment and overall program alignment. They are as follows:

1. Publishing of departmental responsibilities and procedural guidelines
2. Establishing interdepartment and interdivision lines of communication
3. Definition of the organizational structure

Initial work authorizations have been issued to other divisions, and research and coordination is being accomplished prior to the development of a heavy work load.

Subcontracts Department

Revised cost proposals have been secured from all major subcontractors for use in the definitization of their subcontracts. The proposals received shall be used as the basis for definitive negotiations. Contract definitization schedules for all subcontracts have been prepared and published. Any deviation from these schedules will have to be accompanied by documented justification, and the concurrence of the general supervisors must be received before the deviation can be made.

S&ID subcontractor management offices have been established at all subcontractor facilities. The following are the subcontractors as of this report period:

Aerojet-General Corporation
AiResearch Manufacturing Company
Avco Corporation
Collins Radio Company
Lockheed Propulsion Company
The Marquardt Corporation
Minneapolis-Honeywell Company
Northrop-Ventura Division
Pratt & Whitney Aircraft
Thiokol Chemical Corporation

PERT

PERT networks have been established with tentative approval for the use of same for biweekly PERT reporting.

Subcontractors' periodic briefing sessions have been conducted with all subcontractors and will continue.

Major Subcontracts

Minneapolis-Honeywell (Stabilization and Control System)

Relative to this subcontract, the following were accomplished during the past quarter.

The SA-7 and the SA-8 supercircular reentry missions when redefined as nonrecoverable missions.

Special tooling and special test equipment lists were reviewed and partially approved. Additional approvals or denials will be compatible with the in-house requirement schedule at this location. The first complete (estimated 99 percent) hardware utilization list for airborne equipment and GSE was established, and the Minneapolis-Honeywell schedule was submitted for in-house review and subsequent negotiation.

Collins Radio (Telecommunication System)

The following are the significant accomplishments of the past quarter.

A make-or-buy conference held between S&ID and Collins resulted in the decision to remove the requirement for the master timing system (clock) from Collins' statement of work. Also, as a result of this meeting, the DSIF transponder and telemetry equipment changed from Collins make to Collins buy.

Major clarification has been achieved between Collins and S&ID on the details of work and the exacting requirements.

Letter Contracts for TV studies have been issued by Collins to RCA and Raytheon.

Secondary administration responsibility at Collins has been changed from the Navy to the Air Force.

[redacted]

Avco Corporation (Heat Shield)

The following are the significant accomplishments during the past quarter.

Avco submitted a facilities request in excess of $1,000,000 indicating a possible schedule slip if certain manufacturing equipment was not made immediately available. Avco has agreed to a listing of lesser dollar value and is submitting a new Appendix A application by the end of June.

The delivery schedule was revised from 14 to 6 heat shields and deleted all requirements for boilerplates.

Avco was directed to perform investigations and trade-off studies on the following:

1. Light-weight metals
2. A one-piece design
3. Alternate substructures (fiberglass - aluminum)
4. In-space repair kits
5. The result of reducing the severe 260 F requirement

AiResearch Manufacturing (Environmental Control System)

The following changes in the system are firm and have been approved by S&ID:

1. The heat pump has been deleted.
2. The charcoal filters have been incorporated in the catalyst filters.
3. Tests have been completed on the wick-type water separator, and action has been initiated to incorporate this unit into the system. This separator will replace the sponge-type previously employed.

Aerojet-General (Service Module Propulsion System)

The following are the major accomplishments during the past quarter.

Design and development of major engine components has begun and, in the case of the injector, has resulted in test hardware.

[redacted]

The design studies requested by S&ID have been performed with resultant benefits to the S&ID engineering effort.

One soft mock-up has been delivered to S&ID.

Guidance has been received from NASA on GFP fuel procurement required at Aerojet.

Lockheed Propulsion (Launch Escape Motor)

The following is the significant information concerning the past quarter.

The swivel nozzle-type of thrust vector control was selected by S&ID and approved by NASA. NASA later directed S&ID to have Lockheed's subcontractors stop work on this type of nozzle. Direction was promised by 16 June 1962 but has not been received. Design efforts are on schedule as effected by the thrust vector control.

The Marquardt Corporation (Reaction Control Engines)

The following are the significant accomplishments of the past quarter.

The Letter Contract was negotiated, issued, and accepted.

Final procurement specifications for both the command module and service module engines were issued.

Soft mock-ups have been delivered to S&ID.

Design work for the service module reaction control engine is on schedule.

Thermodynamic studies at S&ID have indicated a design problem with regard to the command module reaction control engine. Studies are being conducted to determine the engine design required. The supplier has recommended the use of a cold wall engine with an ablative nozzle.

Northrop-Ventura (Earth Landing System)

The following are the significant accomplishments of the past quarter.

El Centro was selected as the site for drop tests by the supplier, and NASA has issued purchasing requisitions to the Air Force and the Navy for required support.

Design effort has experienced some delay due to the changes in the parachute deployment system, parachute compartment configuration, operating envelope, and the substitution of explosive bridge wire for hot pyrotechnic ignition system.

Bailment of a C133A required for qualification testing has not yet been accomplished by NASA, but modification design work for conversion of the aircraft to accept the command module is progressing satisfactorily at Douglas Aircraft.

Thiokol Chemical (Escape Tower Jettison Motor)

The following are the major accomplishments of the past quarter:

The Letter Contract was negotiated, issued, and accepted.

The heavy-walled nozzle design was completed.

The fabrication of heavy-walled nozzle was completed.

The nozzle test program was started.

Propellant grain design was completed.

The case enclosure design was completed.

The test tooling design was completed, a supplier was selected, and an order placed.

Case and closure designs were submitted to S&ID for approval.

Heat transfer and stress analysis on motor components were completed.

A supplier for the nozzle, case, and closure was selected.

The pyrogen tooling design was completed.

Pratt and Whitney (Fuel Cells)

The following are the significant accomplishments of the past quarter:

Fuel cell element assembly was detailed.

Component testing was conducted for diaphragm fatigue and vane wear.

Analytical studies were conducted for optimum glycol pump speed, radiator and heat exchange, and teflon seal.

GSE requirements were approved.

Procurement was begun on major subcontract items.

New Procurements

Supercritical Gas Storage System

All proposals have been received and evaluated. A presentation of the recommended source was made to the source selection board, and their approval was received. Approval of NASA and notification of the supplier is expected during the next period.

Antennas

Three of a total of nine antennas have been ordered. Proposals have been received on those remaining where specifications are available.

Batteries

Proposals have been received and are being evaluated.

Inverter

Proposals have been received and are being evaluated.

Battery Charger

The prospective bidders list has been approved, and the procurement awaits release of a specification.

Propellant Utilization System

The prospective bidders list is in the process of approval. Specifications will be released during the next period.

Tanks

The prospective bidders list is in the process of approval. Specifications have been released.

[redacted]

Cameras

The prospective bidders list has been prepared. Specifications will be released during the next period.

Telescopes

The prospective bidders list has been prepared. Specifications will be released during the next period.

Subcontracts

The major subcontracts will be definitized during the next quarter. All pending procurements will be through the selection cycle.

Manufacture of boilerplate hardware will begin during the next quarter. In some areas, hardware will be delivered to S&ID.

The MR-I reporting procedure and format will be revised and published. This revision will incorporate suggestions from many functional areas. Definitive reliability, GSE logistics, and test plans will be submitted by the subcontractors.

Definitive specifications will be negotiated and issued. During definitive contract negotiations, a cost reduction program will be instituted.

Subcontractor funding is shown in Table 1.

Table 1. Subcontractor Funding

Company	Present Funds Allotted (Dollars)	Funds Required Through Definitization Dates (Dollars)	Anticipated Definitization Dates	Date to Which the Funding Will Last
Minneapolis-Honeywell	5,325,000	11,625,000	30 August 1962	30 September 1962
Collins Radio	3,000.000	8,000,000	15 August 1962	30 August 1962
Avco Corporation	1,000,000	5,122,682	27 July 1962	30 August 1962
AiResearch	2,500.000	4,000,000	30 August 1962	30 August 1962
Marquardt	2,000,000	4,500,000	31 August 1962	31 August 1962
Thiokol	885,000	885,000	15 August 1962	30 September 1962
Lockheed	2,000,000	2,000,000	8 August 1962	30 September 1962
Northrop-Ventura	1,000,000	3,000,000	30 July 1962	30 September 1962
Aerojet-General	1,435,000	3,035,000	15 August 1962	30 September 1962
Pratt and Whitney	3,607,754	5,307,754	15 August 1962	30 September 1962

[redacted]

STABILIZATION AND CONTROL

PRELIMINARY DEFINITION OF THE STABILIZATION AND CONTROL SYSTEM (SCS) MODES

A preliminary analysis of the SCS operational requirements and of thrust utilization has led to the definition of the operating modes.

ENTRY CONTROL SYSTEM SYNTHESIS

An analysis of small perturbation combined with consideration of fundamental fuel consumption has led to the definition of a multiloop nonlinear entry control system. Exact analysis of the system proved difficult, but an approximate phase plane analysis displayed the significant characteristics of the system that correlated well with the analog computer simulation results. A parameter optimization program of the system was carried out on an analog computer.

The optimized entry control system proves to be simple, versatile, and capable of simple adjustment to reflect changes of vehicle inertias, thrust levels, moment arms, etc. The dynamic response of the system can be increased or decreased by simple parameter variations without the penalties of inefficient propellant consumption.

PULSE MODULATION TECHNIQUES STUDY

Two pulse modulation techniques have been analyzed to attain minimum deadband rate, economy of fuel consumption, and small signal response.

The procurement specification for the prototype stabilization and control system has been prepared, edited, reviewed, and released. This document is a performance-oriented specification.

A similar procurement specification for the boilerplate launch escape stabilization and control system has also been prepared, coordinated, edited, and submitted to the specification group for release. This document will reflect the latest system configuration as of mid-June.

A revised hardware utilization list for the SCS reflects the later requirements for airborne vehicles, trainers, mock-ups and simulators, and reliability test articles.

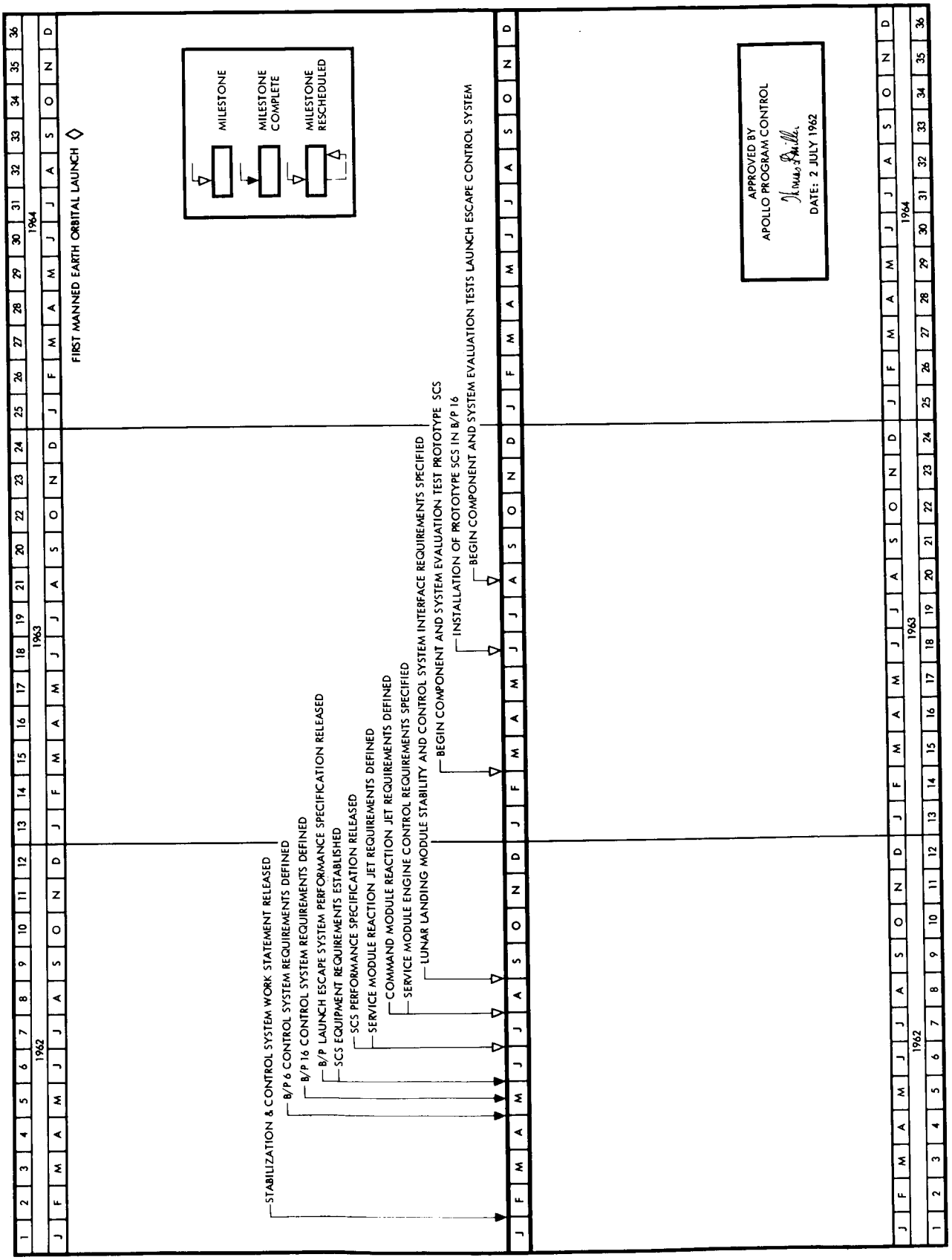

GENERAL ORDER DEVELOPMENT SCHEDULE—STABILIZATION AND CONTROL—G. O. 7130

A design layout has been prepared for the installation of the boilerplate launch escape SCS in boilerplate 6. This system is composed of a three-axis rate-gyro package, an electronic computer package, a telemetry signal conditioner package, and a power inverter package. The equipment will be located in the spacecraft in the general vicinity allocated for the prototype SCS equipment. Consideration has been given to the accessibility of this equipment for ground checkout and maintenance, and design layout has been forwarded to the structures group for inclusion of the structural provisions for mounting this equipment to the airframe. The reformation has been generated and forwarded to the electrical power group for interpackage and intrapackage cabling harnesses including the tie-in to the GSE umbilical connectors.

SYSTEMS DESIGN

The system mechanization has been changed to conform with the LES on-axis engine nozzle configuration. This effort included the following:

1. Redesign of signal circuits with a resulting net reduction of one amplifier-demodulator and one summing board

2. Redrawing of system control signal schematic

3. Recalculating scale factors and time constants. These scaling calculations were made using a 0.2-second time constant to synthesize the proportional plus integral control equations

Initial definitions of phasing have been started with first emphasis placed on the servo interface.

Systems breadboard testing (using the Dyna-Soar configuration) was continued in the following areas:

1. Closed-loop frequency responses

2. System time constants

3. Servo feedback circuit configuration

4. Servo dry loop gain

The breadboard is now being modified to the on-axis configuration.

The breadboard servo simulator design and development work has been completed. The simulator proved satisfactory in stability, phasing, and

closed-loop frequency response in conjunction with the launch escape SCS systems breadboard.

The solid-state modulator was tested in conjunction with the servo amplifier. The chopper scale factor was determined and the null and waveform observed. Initial results are satisfactory.

There are four areas of exploration under consideration at present. The first area is concerned with the description of the apparent earth horizon in the presence of the atmosphere. The objective is to find some meaningful criterion to permit a reduction of an apparent diameter to a true angular diameter by considering the effect upon the existing radiation of scattering phenomena. The discipline considered most useful in this connection is radiative transfer for the case of planetary atmospheres as opposed to the more often considered case of stars. A formalism will be pursued that may show a possible criterion for observation and the experimental data required for the quantitative expression of that criterion for the case of the earth.

The second area is concerned with the description of the potential field of the moon in terms of a confocal coordinate system with ellipsoidal parameters chosen to make a coordinate surface coincide with the triaxial ellipsoid best describing the figure of the moon. Such a description will lead to a potential function (in terms of lame functions) that will permit easier application of known boundary conditions and more compact formulas for use by the vehicle computer than is the case with the usual spherical coordinates and tessler harmonic expansions.

The third area is a follow-up of sextant investigations as far as is necessary to inform other S&ID personnel and to assess the implications of new changes proposed to the results already obtained.

The final area is concerned with the availability of suitable stars for midcourse navigational fixes.

During the next period, the development of formulas will begin for secular and possibly periodic perturbation of orbital elements and parametric studies using a digital computer to integrate the lunar satellite vehicle equations of motion. Study will be also conducted to determine a simplified scheme for generating a midcourse reference trajectory and its associated transition matrices suitable for the small spaceborne computer. This is necessary to solve the midcourse reference trajectory computation problem for guidance and navigation.

Requests have been sent to NASA for Mercury and Gemini guidance system data that would be pertinent to Apollo. It is anticipated that these requests will be fulfilled during the next quarter.

An evaluation of the merits of visual cues, the necessary displays, and the interface equipment will be conducted.

A preliminary report will be written on the memory space required, rate of computation achieved, and the expected numerical errors incurred.

The reaction jet sizing study and the reaction jet fuel requirements for the command and service modules will be completed during the next period.

The duty cycles for the command module reactions jets will be determined. Methods of accomplishing the command module reorientation maneuver after aborting during boost with the LES will be studied, and the associated entry control system requirements will be defined. A study to define the entry trajectory sensitivity to roll rate acceleration will be completed.

PULSE MODULATION TECHNIQUE STUDY

A "pseudo rate" feedback scheme which does not require the use of rate sensors will be investigated and a pulse modulation scheme will be recommended for use in Apollo.

INTERFACE STUDIES

The Saturn S-IVB interfaces will be studied to determine the use of the S-IVB reaction jets for attitude control during various phases of the Apollo missions. This study will be coordinated with navigation and guidance S-IVB interface studies to answer questions related to signal interfaces between the Apollo vehicle and the S-IVB guidance and control systems.

REFERENCE SYSTEMS

Reference system requirements will be defined for the Apollo missions. Particular attention will be placed upon providing reference systems for the Apollo during phases where high tumbling rates will be encountered.

RENDEZVOUS CONTROL SYSTEM STUDY

The control system requirements for rendezvous will be defined, and control systems satisfying these requirements will be studied.

[redacted]

CREW PROVISIONS

FLIGHT CONTROLS AND DISPLAYS

A special task group began work on a basic analysis and study to define Apollo controls and displays requirements on 18 June. The objective of this group is to evolve an optimum control/display arrangement. The initial phase of this effort is expected to be completed in six weeks.

A cabin pressure relief valve manual over-ride is being designed to permit the astronaut in the control position to react to any emergency that requires immediate expulsion of the cabin atmosphere.

A major activity will be the precise definition of the manual control/display requirements. Each segment of the flight mission will be analyzed in detail.

Problems requiring more complex procedures than the present state of the art will be identified and this information made known so that a development program can be started immediately.

Each subsystem involved in a flight segment will be analyzed from a total system point of view, i. e., navigation, communication, and flight control interaction.

TRAINING

Methodologies and procedures for scoring and documenting proficiency of crew members in use of the part task trainers will be developed.

TASK ANALYSIS

Revisions of basic task analysis and crew performance data will be prepared with emphasis on requirements for one-man and two-man operation, abort modes performance and task requirements, in-flight maintenance procedures criteria, and contingency operations and procedures.

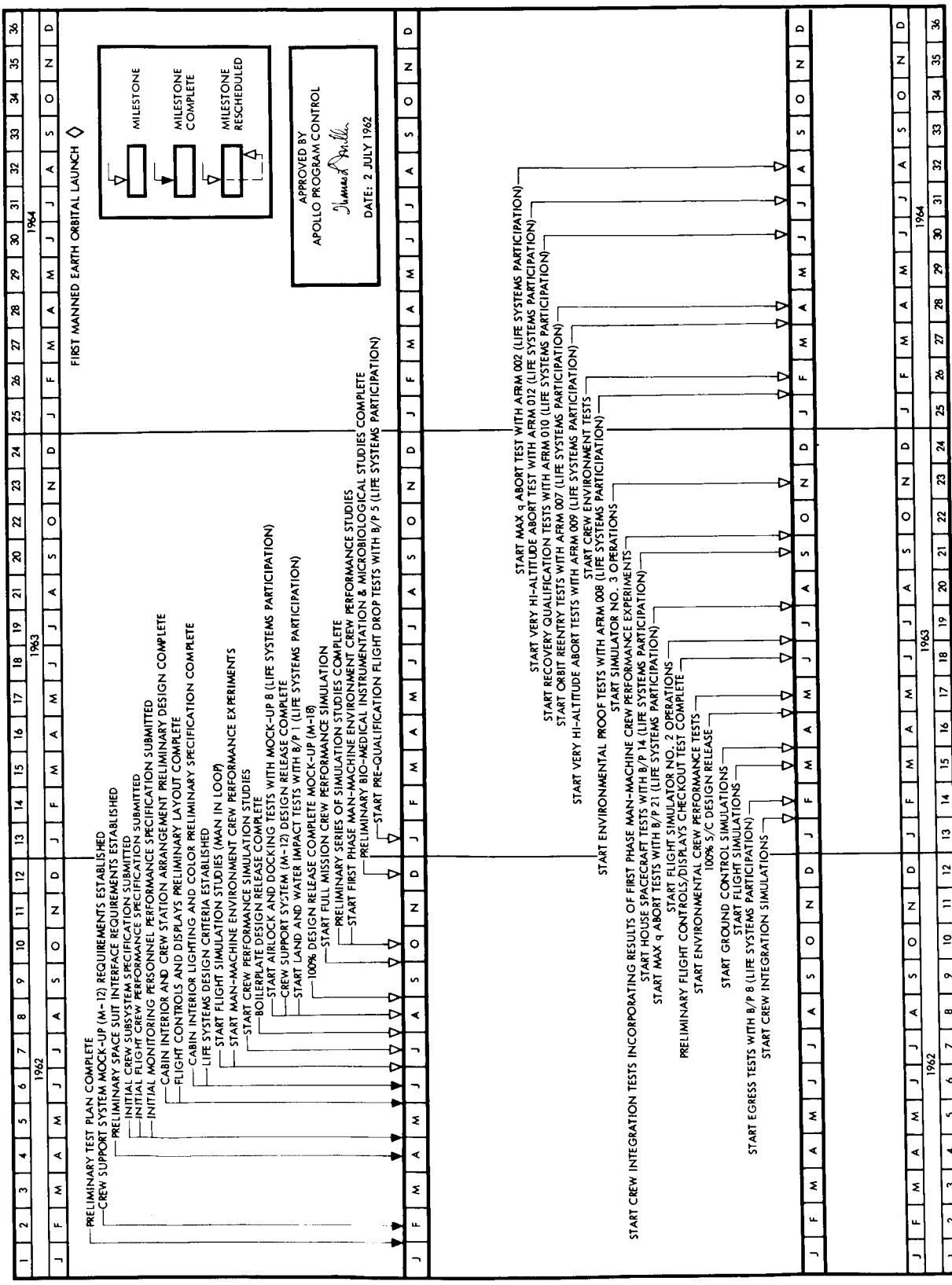

GENERAL ORDER DEVELOPMENT SCHEDULE—CREW PROVISIONS—G. O. 7131

Special analyses such as time-line, link, and use-frequency studies will be conducted to aid in the specification of control-display and crew position arrangements.

Development of a complete aerospace safety program will be inaugurated and the program will be implemented into the spacecraft development schedule.

Crew support and restraint systems tests will be initiated with tower drop tests (boilerplate 1) in August. Anthropometric dummy usage procedures and a list of mandatory instrumentation requirements for this first test series are being prepared by life systems in addition to the review of overall test plans and procedures.

Effort will be continued on the window layout and the visual navigation system manual back-up study and tests.

The Apollo Flight Crew Performance Specification, S&ID 62-90, and the Preliminary Spacecraft Systems Monitoring Personnel Specification will be revised.

A first 4-day simulation test run will be undertaken by the test and simulation group. Data reduction and reporting will be initiated after results of this run are evaluated. The simulation equipment will be up-dated for the next run.

Human engineering evaluation tests will be accomplished on mock-ups 3 through 12.

Flight simulation activity will start in evaluator 1. Further studies will continue through the next quarter.

The cabin arrangement group will design, develop, and detail the crew equipment for boilerplate 14 (environmental spacecraft 1) during the next period.

A spare parts concept based on in-flight task analysis and in-flight maintenance capability will be developed during the next quarter.

A study of the recovery system for the Apollo program is planned for next quarter.

Planned biomedical activities are physiological monitoring of crew performance simulation, development of criteria for complete food and feeding subsystem, identification of microbiological problems associated with confinement (i.e., cross infection and epidemiology), evaluation of suspected trace contaminants for toxic levels of exposure, and analysis of the effects of stress on physiological performance.

LIFE SYSTEMS MOCK-UP ACTIVITY

A Human Engineering Design Principles Check List is being prepared for evaluating mock-up 3, 4, 5, and 7.

A preliminary biomedical activity schedule on simulator runs 1, 2, and 3 is being up-dated to include microbiological checkout, bioinstrumentation checkout, and diet evaluation studies.

Human engineering evaluation testing is continuing in evaluator 1. Anthropometric and design tests have included shirtsleeve tests, unpressurized air lock tests, and pressurized air lock tests for one subject.

CREW COUCH DESIGN

An adjustable couch that uses electrical actuators is being designed. The actuators will move the couches in evaluator 1 from launch through transit and docking positions, a total travel of approximately eight inches.

CREW ANALYSIS

Work is continuing on the manual prelaunch phase time-line analysis and on the earth-orbital phase. In-flight crew tasks necessary during lunar landing and lunar-orbital rendezvous, while utilizing the lunar excursion module, are being analyzed for inclusion in this revised specification. In-flight maintenance procedures requirements for countdown operations are being prepared.

Procedures for psychomotor and psychological testing are being prepared for use in confinement studies and crew tests.

SIMULATION AND TEST

Life systems inputs for Apollo Test Plan, SID 62-109, are being revised and up-dated.

Test procedures are being prepared for human engineering evaluations of mock-up and evaluators.

Work is in progress to develop recommendations for that aspect of the in-house test and simulation program evaluating crew performance.

LAUNCH ESCAPE SYSTEM (LES)

STRUCTURAL DESIGN

Detail design layouts of the LES structure were completed during this quarter. Structural drawings in support of the LES have been prepared and have been released to Manufacturing and Maintenance. The layouts and released drawings reflect the established LES configuration and incorporate provisions for hinged nozzles thrust vector control. Procurement of material for fabrication of the tower structure was initiated.

During the next period, LES installation and general assembly drawings will be released.

Design feasibility studies to establish a passively controlled LES have been initiated.

Preparation of control drawings for the several S&ID subcontractor interfaces in the LES is under way.

If thrust vector control in the present form is selected for development, the first static firing test of the launch escape motor will be conducted about 1 September 1962. The delivery of one inert motor to S&ID for boilerplate 9 is scheduled for 1 September or earlier.

If a passive LES is selected for design and development, a reanalysis of program schedules will be necessary.

The first static firing test of the jettison motor is scheduled for 1 September. Pyrogen development tests and propellant ballistic tests will precede the full-scale tests.

FABRICATION

Potential schedule slippage to the launch escape tower schedule shown during this period was caused by the 13-week undersupport of titanium tubing for the in-work schedule. This condition may be compounded by the proposed redesign of the LES which will be presented to NASA in the near future. The effect on the overall LES schedule cannot be determined until the extent of the redesign is known.

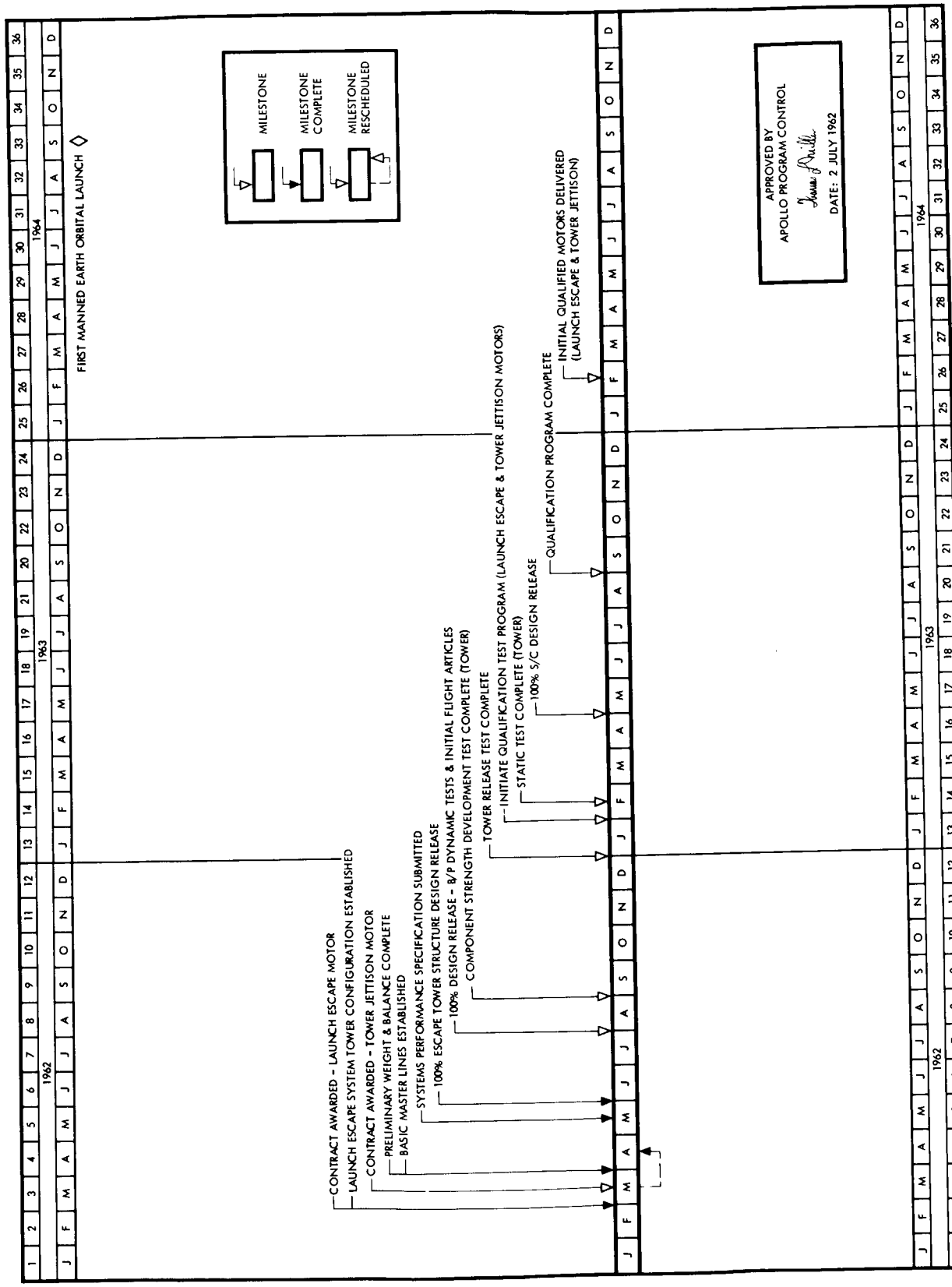

GENERAL ORDER DEVELOPMENT SCHEDULE—LAUNCH ESCAPE SUBSYSTEM—G. O. 7132

Planned LES activity for the next period includes the scheduled completion of the first and second test towers and the completion of the tower for boilerplate 9 (dynamic test). Developments indicate that the scheduled completion dates for the two test towers will not be met.

Fabrication of the escape tower portion of mock-up 9 (spacecraft handling and transportation) is approximately 70-percent complete. Completion of the escape tower portion of mock-up 9 is planned for July.

[redacted]

ENVIRONMENTAL CONTROL SYSTEMS

The design of the environmental control system package with easily replaceable major components has been completed.

The PERT networks for the ECS and ECS/GSE have been prepared and submitted.

ECS performance and requirement summaries affecting other systems have been prepared and submitted.

Development-type hardware for the demand regulator and nitrogen low-pressure regulator has been received.

All ECS equipment for mock-up 3, 5, and 7 have been fabricated and installed.

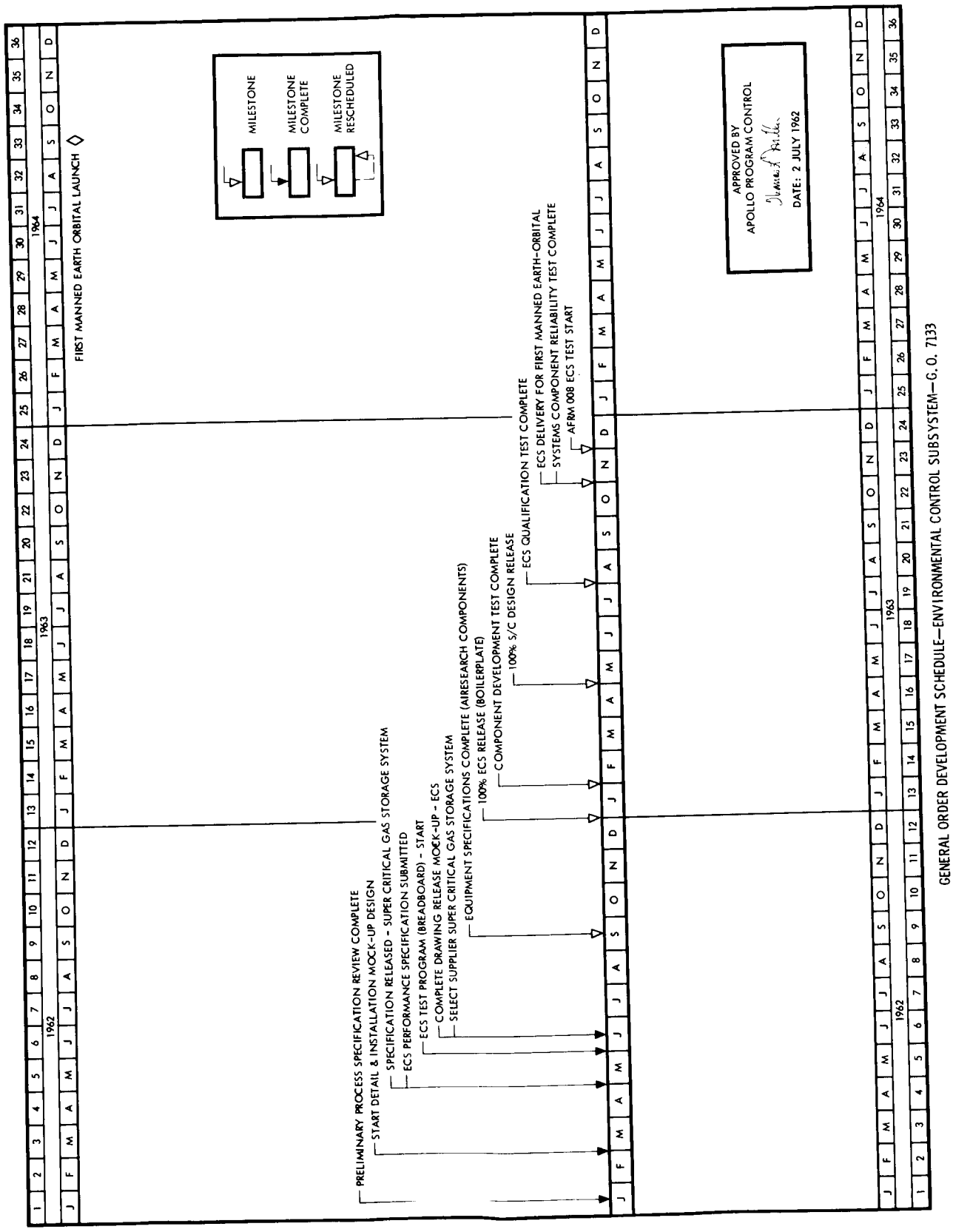

GENERAL ORDER DEVELOPMENT SCHEDULE—ENVIRONMENTAL CONTROL SUBSYSTEM—G.O. 7133

EARTH LANDING SYSTEM

DROGUE PARACHUTE SYSTEM

The drogue parachute system was changed to increase reliability and to eliminate deployment of the drogue parachute through the forward compartment cover. After the forward compartment cover has cleared the command module, the drogue deploys to decelerate the command module until conditions suitable for main cluster deployment are reached. The drogue is then released from the command module attachment and the three main parachutes are individually extracted by three independent, mortar-deployed pilot chutes. In this manner, successful deployment of the main landing chutes does not directly depend on satisfactory operation of the drogue chute and drogue chute release. The back-up drogue is retained for use in the event of primary malfunction.

Compartment Design

The parachute compartment has structural members added between the air lock and parachute compartment bulkhead to add strength and reduce weight. This change adds strength to the command module in this area and allows a weight reduction of approximately 24 pounds by reducing the bulkhead thickness from 2 inches to approximately 1 inch.

Main Parachute System

The first three 88.1-foot-diameter main landing chutes have been received. Dimensional checks are being conducted to ensure compliance with design requirements. These chutes are within the 99.25-pound weight estimation.

The parachute compartment heat shield release system is advanced in the layout stage and the launch escape tower release system has been released to manufacturing for early boilerplate vehicles.

Parachute Tests

Parachute testing has begun. Studies are being made to determine the need for a wind tunnel program for obtaining data on mutual effects of the drogue chute and command module. This series of component and subsystem tests will continue until November, at which time boilerplate vehicles closely simulating the weight and external configuration of the command module will

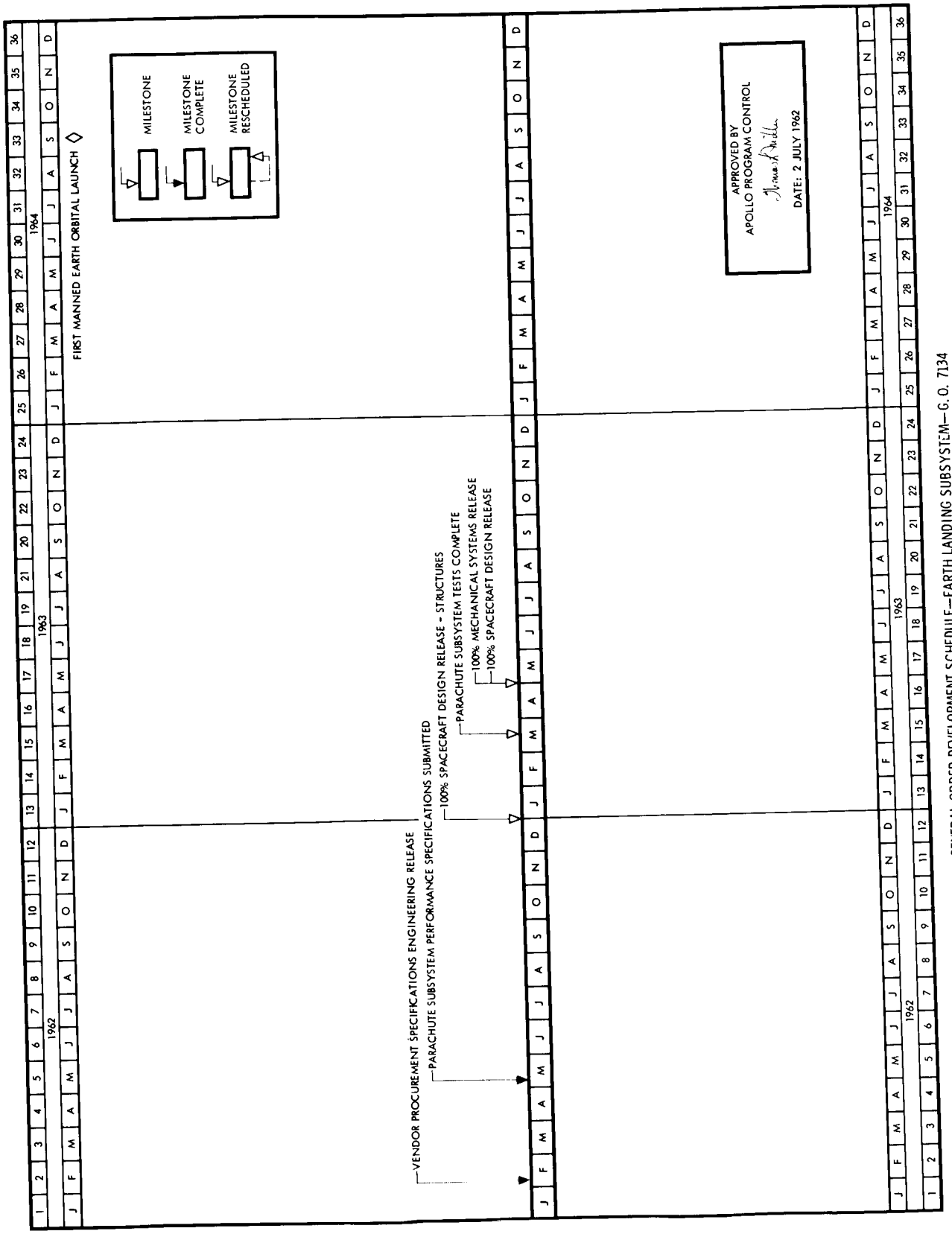

GENERAL ORDER DEVELOPMENT SCHEDULE—EARTH LANDING SUBSYSTEM—G.O. 7134

be dropped from aircraft to prove the entire parachute system under all expected conditions of operation. Studies are being conducted to determine the aircraft to be used for these drops. Currently, the Douglas C-133 (modified), Convair 880 (modified), and Boeing KC-135 are under consideration.

HEAT SHIELD

The parachute compartment heat shield is secured to the forward bulkhead of the command module by four toggled latch mechanisms. These are held closed by a rigged cable system that is cut by explosively actuated guillotines. The shield is impelled clear of the parachute compartment by four gas-operated cylinders equally spaced around the air lock. A structural tie between the air lock and the forward bulkhead also serves as a housing to isolate thrusters, latches, plumbing, and cables from the parachute compartment.

Two centrally located gas generators, each plumbed to two opposite thrusters and to cutters for all four latch cables, provide redundancy.

[redacted]

COMMUNICATION SYSTEM

A telemetry operational data rate of 64,000 bits per second has been established with additional reduction as the study is continued and completed.

The concept of the utility telescope has been simplified to provide viewing on one side of the spacecraft.

The central timing system was simplified by reduction in the accuracy required by nonguidance equipment. The guidance clock is synchronized.

Pulse code modulation (PCM) input levels have been established at 250 mv and 5 volts.

Lunar excursion module/command module interfaces for telecommunications have been examined.

A study of radio recovery aids resulted in the recommendation of both HF and VHF equipment.

Selection of the first three antenna subcontractors has been made, and specifications for additional antennas have been issued.

During the next period, procurement specifications on essentially all on-board systems will be released by S&ID and Collins. Proposals will be evaluated, and hardware contracts will be awarded. A final recommendation for a utility telescope configuration will be submitted to NASA.

Detailed requirements for all of the photographic cameras will be documented and procurement specifications begun. A study will be implemented to establish optimum shielding for the film.

Final negotiation of all the interfaces between the spacecraft timing equipment (SCTE) and other spacecraft equipment will be completed.

Signal conditioner requirements will be established. The number of channels and the bit rate will be selected for the operational telemetry equipment. (Recorder details and the number necessary will be established.)

The modulation techniques study will be completed, and a report will be released.

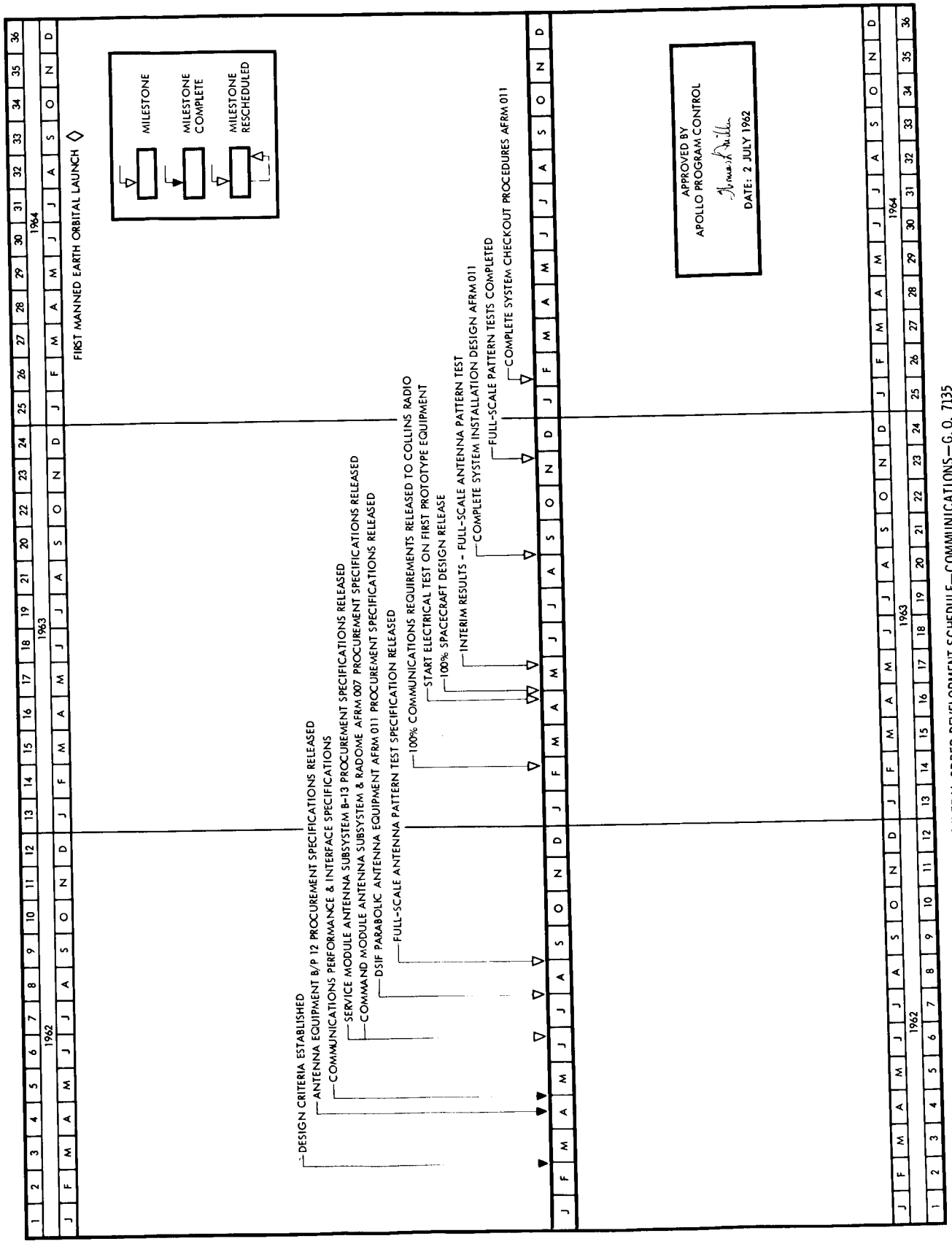

GENERAL ORDER DEVELOPMENT SCHEDULE—COMMUNICATIONS—G. O. 7135

Final configuration of the C-band radar transponder will be established, and procurement specifications will be released.

The development of the discone will begin.

[redacted]

NAVIGATION AND GUIDANCE

An approximate closed-form solution to the nonlinear equation of motion for primary steering has been determined.

Preliminary study has been made on back-up guidance for reentry to supplement the primary guidance in event of its failure. A back-up reentry guidance scheme and its mechanization have been formulated. This scheme involves a strapped-down system utilizing the spacecraft SCS and an accelerometer.

The work accomplished in the abort guidance area has been primarily centered in the launch phase, and studies are now being conducted in the earth-orbital and midcourse abort.

A study of back-up guidance for earth-orbital missions has been initiated.

Study in the determination of the requirements for midcourse guidance and navigation has been initiated.

A back-up transearth midcourse navigational and guidance scheme is being investigated. The method, which is an explicit technique first proposed by NASA, ensures the correct perigees. For navigation, a nonlinear filtering technique using successive estimates of angular momentum and energy is being investigated.

A study applying the techniques of statistic prediction theory is being conducted to obtain a relation for the expected error in range on any given trajectory.

Preliminary effort in this area of study was directed toward the definition of the rendezvous problem, for which a literature search was completed. A study of sensitivities and timing errors was conducted for both earth and moon orbital rendezvous.

An investigation of the explicit guidance mode for rendezvous has been initiated. Equations of motion were derived in inertial and rotating target-centered coordinates.

An IBM program written for a simplified in-plane explicit guidance scheme based on linearized equations of motion is now being checked out.

CONFIDENTIAL

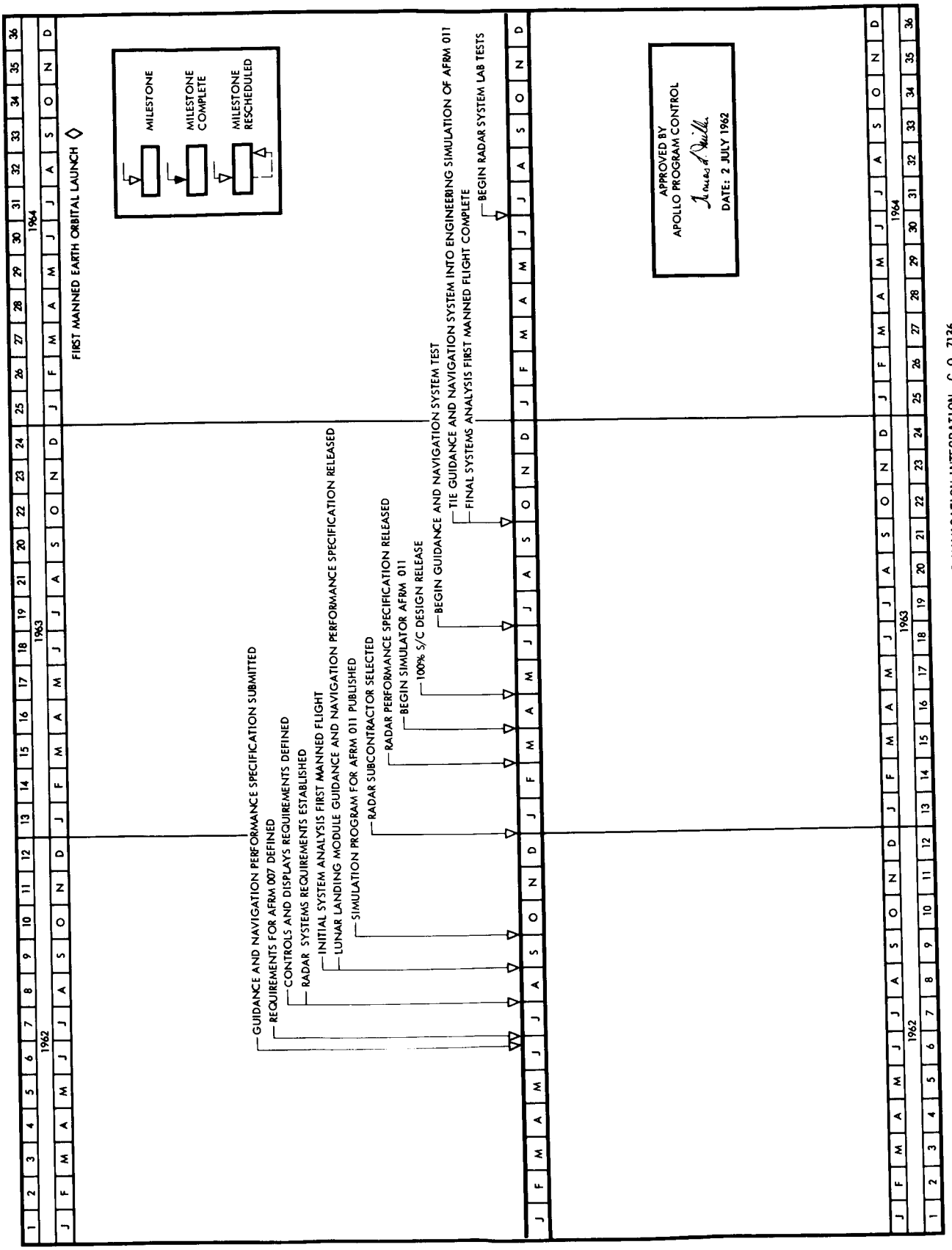

GENERAL ORDER DEVELOPMENT SCHEDULE—GUIDANCE AND NAVIGATION INTEGRATION—G. O. 7136

CONFIDENTIAL

[redacted]

A report of method of computer algorithm analysis has been completed. The report discusses the application of the zeta transformation to the analysis. This effort was conducted to develop performance criteria for computer mechanization.

A relationship has been derived relating the mean and mean-squared values of fuel consumption in midcourse navigation to the mean-squared values of the required velocity corrections. The relationship has been derived for the total fuel consumption. Two assumptions are made: (1) the total fuel consumed in midcourse corrections is small compared to the total fuel available; and (2) the various velocity corrections from point to point are uncorrelated.

The larger part of this quarter has been devoted to a detailed study of the application of Pontryagin's maximum principal to the problem of optimized space flight navigation. This study has led to understanding of the method and of the problems that arise in applying this technique. The technique has wide application and applies in theory to all phases of space flight navigation. However, the nature of the problems associated with each phase vary considerably and in some phases become formidable. It has been found that by taking a different approach from that presently employed in the literature, it is possible to circumvent some of the more formidable problems that exist. One of the most useful results from the application is that even in the most exigent cases, where solutions are difficult to establish, certain characteristics of the control parameters can be determined readily.

A study was initiated to define the sextant limitations and the maneuvers required by limitations. The study also examines the effect of residual vehicle angular rates upon the motions of the images in the field-of-view coordinates. This latter study is made to supply the basis for establishing Apollo vehicle stabilization requirements. The studies conducted and their summarized results are as follows:

(1) Derivation of Midcourse Navigational Roll and Pitch Maneuver Angles Necessitated by Sextant Viewing Limitations - The pointing of the sextant optic axes is restrained by the availability of only 2 degrees of freedom with respect to the vehicle and by restriction in range in each of these degrees of freedom. Accordingly, if any two directions that do not subtend an angle greater than 120 degrees are chosen, a roll and/or pitch maneuver will generally be required to bring the objects into the pointing range of the optic axes. Formulas have been derived that express these maneuver angles as functions of any vehicle attitude before maneuver, any two objects, and the sextant pointing limitations.

(2) Direction Before Maneuver of Objects to be Viewed - Formulas have been derived which show the dependence of the direction cosines (along vehicle axes before maneuver) of objects to be viewed upon pertinent parameters for two cases, points on earth and points on stars. The expression for points on the earth shows the dependence upon vehicle attitude, time, vehicle position, and the latitude and longitude of the point considered. The expression for the case of a star shows the dependence upon the vehicle attitude and the right ascension and declination of the star.

(3) Image Motions in the Field of View - Before estimates can be made of sextant observation accuracy, a set of time-dependent expressions for the field of view coordinates of the image must be obtained. Such expressions have been derived and show explicit dependence upon residual vehicle rotation and upon the directions of the objects viewed with respect to the vehicle. The resulting image motions in the field of view will be arcs of small circles whose angular radii will be the space angles between the angular velocity vector (which fixes the centers of the small circles) and the objects viewed. These expressions should be useful in establishing criteria by which the success of an observation can be judged.

A report is being published which gives the derivations and results stated above.

A preliminary study has been made into the triaxial effect of the moon on lunar satellite orbital behavior. The study was made to establish the severity of lunar rendezvous problems due to unstable or unpredictable orbital behavior of the target vehicle. At present, a literature research is being conducted. Preliminary observation of work accomplished by the Russians indicates that significance in eccentricities and other orbital parameters may be expected.

Evaluation of the navigation and guidance computer system and the relationship to the Apollo associated subsystems has been initiated, and the following have been accomplished.

(1) A representative has been sent to MIT to gather latest available information and concepts on the navigation and guidance system and its employment in the respective Apollo mission phases. Letters have been published that concern the general system philosophy and the latest details of the components of the navigation and guidance system.

(2) Participation in the various S&ID/MIT/NASA and S&ID/Minneapolis-Honeywell meetings has been arranged, and contacts in these areas have been made.

[redacted]

(3) A computer system mission profile has been initiated to summarize the concepts of the Apollo computer functions and its interfaces with its associated navigation and guidance equipment, the crew member, and the SCS system.

Preliminary analysis has been conducted on the dynamic flight simulations required for the guidance and control section. A report has been published on these requirements and studies have been made of the first two phases.

A published report and informal briefing charts were presented to NASA in an informal meeting on the merits of simulation employing actual system hardware and, in particular, the navigation and guidance hardware. The simulations are divided into three general phases to allow an orderly evaluation of overall system evaluation.

(1) Phase I (Digital Simulation) will involve a nonreal-time, closed-loop vehicle simulation within an IBM 7090 for all mission phases. The simulation program of the Apollo guidance computation is 70 percent complete. Work will begin during the next quarter in programming the remainder of the navigation and guidance and the SCS from the latest available information. Trajectories will be furnished by appropriate programming groups in S&ID.

(2) Phase II (Analog/Digital Simulation) will form the basis for all later simulations. It will be designed to allow the replacement of the simulated hardware by the actual system hardware. Evaluation of available digital computers for the simulation has been initiated. The large number of computer programs has been reduced to five and a report is being written on results of the evaluation of these five. During the next quarter a complete report will be written on the results of the complete simulation system involving the recommended general purpose digital data analysis Analog combination.

(3) Phase III (Hybrid Simulation) will involve the updating of the Phase II simulation by actual system hardware as it becomes available. A flight table and the necessary visual cues will be added as needed. A survey of the appropriate flight table is being conducted, and a report on this table is being written.

Apollo guidance computer (AGC) mechanization has been started on the ascent/abort phase of the Apollo mission using an explicit guidance technique. Work has been delayed in order to program the necessary double precision subroutines that will be required to accomplish this mechanization. The

add, multiply and vector dot subroutines have been coded and are presently being compared with the MIT programs recently received.

During this report period, S&ID and MIT agreed to a principal location for the guidance equipment in the lower equipment bay. Certain displays and controls will be retained on the main display panel for monitor and crew operation during periods of stress and powered flight. As a result of these space allocations, the center of the lower equipment bay has become the main navigation station and the equipment, displays, and controls exceed the preliminary installation envelope. As a result of the most recent meeting concerning this subject (18-20 June), S&ID is studying the relocation of certain items to accommodate the additional displays and controls required by MIT to centralize the navigation station in this fashion. MIT is studying the organization of their panel equipment as expanded into the area under investigation. The primary navigation and guidance elements will be installed as previously agreed. The computer will be contained in the center section of the modular rack, conforming to the 18.88-inch clearance width. The inertial measurement unit (IMU) will be mounted on the navigation base just forward of the computer. The sextant and telescope will be mounted forward of the IMU on an articulating base to permit retraction during boost and entry. At all other times, the optics will be extended to provide adequate coverage, and the dynamic seal will be provided by concentric bellows.

NAVIGATION AND GUIDANCE SYSTEM TIME-LINE ANALYSIS

Several studies have been made of the functions that the navigation and guidance system must perform during the various mission phases and the equipment that will be required to accomplish these functions. The information obtained is being used in other studies of control and display equipment arrangement, electrical power requirements, reliability performance, and back-up modes of operation.

Operating philosophies, design concepts, and general checkout procedures have been exchanged between S&ID and MIT. Preliminary work has been accomplished in determining the integration of various levels of navigation and guidance checkout and monitor during factory operations, prelaunch activities, and launch preparations.

SPECIFICATION

The performance requirements specification for the navigation and guidance subsystem has been completed. This document establishes the general functional requirements and the design constraints for the navigation and guidance system as applied specifically to the spacecraft under design by S&ID.

A model of the navigation and guidance subsystem equipment operating modes has been prepared. The phases for a lunar-landing mission were evaluated to determine the time of operation of the subsystem in each of its possible modes of operation. In addition to the primary equipment operating configurations, back-up equipment configurations were determined for both inertial and radar navigation functions.

Study is being conducted on back-up entry guidance to evaluate performance in the next quarter.

Project Mercury documents are being reviewed to establish a minimum system for orbit keeping and deorbit.

Effort will be continued on the study of midcourse guidance requirements.

Alternate data filtering techniques study will be started to determine trade-off between filter complexity and midcourse velocity correction errors.

Alternate navigation sensors will be investigated to determine which is best suited to the back-up guidance system.

As part of the back-up guidance and navigation system study, a back-up guidance system will be studied for lunar ascent to the lunar excursion module to rendezvous with the Apollo spacecraft.

Effort for the next quarter will be centered in the areas of orbital abort and midcourse abort. Also, the technique proposed by MIT for launch abort will be investigated as to the validity of the linearizing approximations.

Efforts during the coming quarter will be devoted largely to a continuation of the study of Pontryagin's maximum principle.

[redacted]

[redacted]

COMMAND MODULE STRUCTURE AND SUBSYSTEM INSTALLATION

DESIGN

In order to provide stress, load path, deflection, and thermal data to support the command module heat shield outer structure design effort, a comprehensive structural test program has been established. All manufacturing drawings required to fabricate full-size test specimens representative of the spacecraft design have been prepared and released.

Apparent thermal conductance studies have been performed on brazed stainless steel honeycomb panels from approximately 150 to 900 F.

The two best of five candidate brazing alloys produced satisfactory joints that provided good ductility and a significant increase in remelt temperatures.

Determination of the mechanical properties of titanium honeycomb sandwich from room temperature to 800 F has been completed. Mechanical properties determinations of HS25 brazed honeycomb sandwich from room temperature to 2000 F have also been completed.

Preliminary mechanical properties determinations have been performed to assist in evaluating the allowable spacing of plug welds in 6061-T6 aluminum all alloy considered for use on the heat shield of boilerplate 16.

Ductility tests on thin-gage welded 15-7Mo sheet have been completed. The information will be utilized for stretch forming welded 15-7Mo stress skin, a candidate for the command module back-up structure.

Thermal conductivity and mean specific heat have been determined for the four phenolic-base ablation materials considered for use on the command module heat shield.

An Apollo design request in March 1962 initiated a study to determine the producibility of 2014 aluminum alloy forged rings required to meet airlock structural requirements of the inner cabin of the command module. Experience obtained in the welding of ring rolled forgings on the GAM-77A fuel tank was utilized in the preparation of the MB0170 specification weldable 2014 aluminum alloy forgings. The specification has been released. Forgings procured according to the specifications will be evaluated.

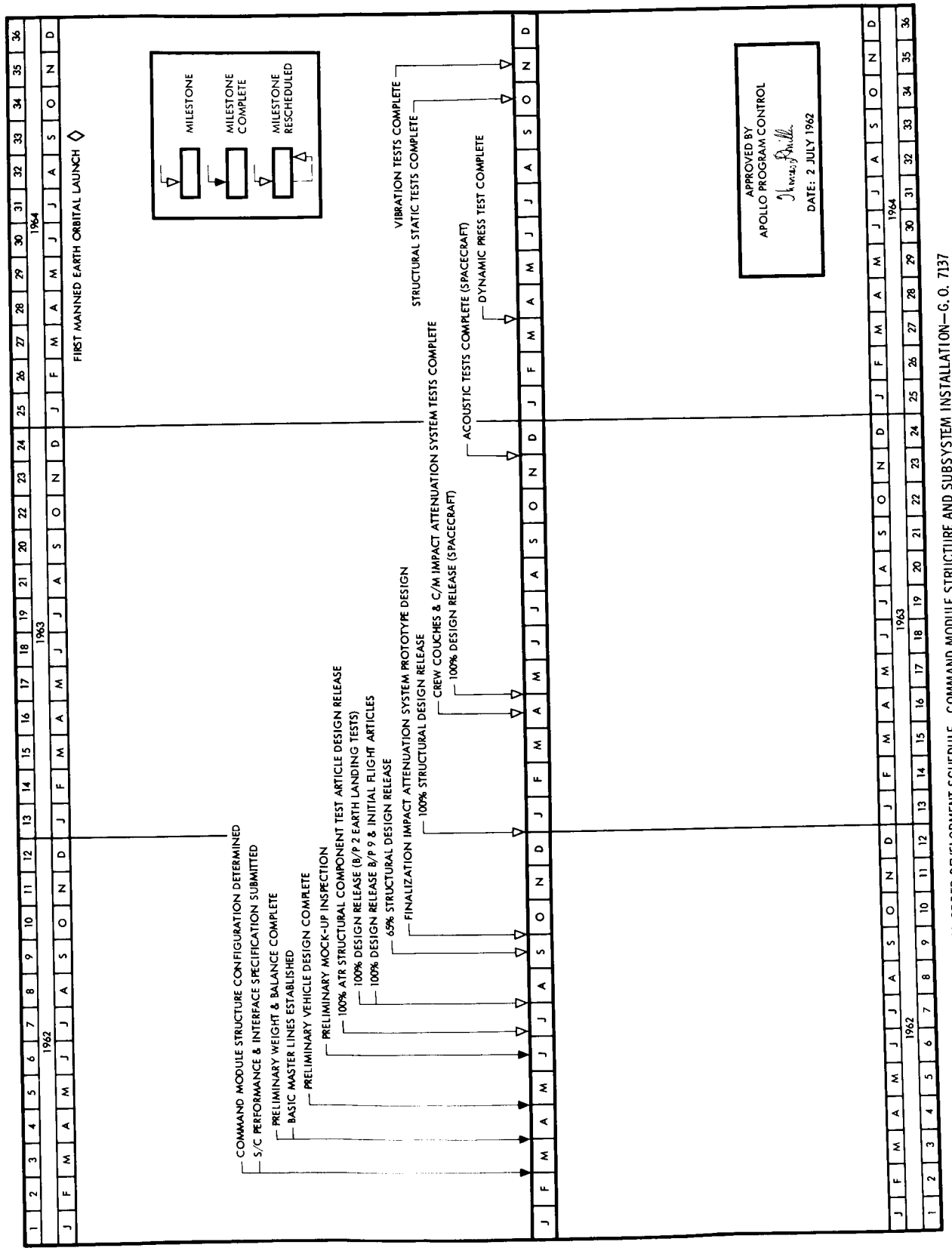

GENERAL ORDER DEVELOPMENT SCHEDULE—COMMAND MODULE STRUCTURE AND SUBSYSTEM INSTALLATION—G.O. 7137

L605 cobalt base alloy brazed honeycomb sandwich panels have been fabricated. A brazing alloy that has been selected melts at 1950 F, remelts at approximately 2000 F, and exhibits sufficient ductability to indicate formability into foil. With availability of the braze alloy as foil, problems related to alloy preplacement are eliminated.

Two L605 brazed honeycomb sandwich panels covered with Avco X-5026 ablative material have been received for testing.

Engineering information was required on weld shear strength of plug and slot weldments on the base of the boilerplate model. A test plan to determine optimum weldment type has been completed, and results indicate maximum strength is achieved by slot weldments. The project has been completed, and a final report has been published.

Tests to establish the width of the weld-heat affected zone for welds in honeycomb insulated aluminum panels were necessary to prevent degradation of the nonmetallic joining material.

Temperature gradients from welding were to be measured by thermocouples and compared with Tempilaq indicators, which, if reliable, would achieve quality assurance at significant savings by elimination of thermocouple installation.

This project was completed and conclusions are that Tempilaq can be used to measure temperature with desired reliability and that definite recess dimensions can be made.

Various samples of laminated fiberglass material of phenolic, epoxy, and polyester resin systems were tested in a hard-vacuum chamber. The project has been completed, and a laboratory memorandum has been written.

Several test configurations of adhesive bonded chem-milled plates were fabricated for evaluation of a new proposed engineering design concept for cooling electronic components.

Activity this quarter was primarily confined to performing design and weight trade-off studies of the boilerplate test vehicles, refining the structural analysis of command module components, and defining the structural test program.

The structural assembly drawings for boilerplate 1, 2, and 6 have been analyzed and released for fabrication. The boilerplate crew couches have been completely analyzed and released. Drawings of various items of both boilerplate and spacecraft GSE have been analyzed including the spacecraft sling assembly and the trailer and dolly support base assembly.

Most effort on the spacecraft command module was spent in investigating the effects of new loads and loading conditions, redefining or expanding the design criteria where needed, performing more detailed structural analyses with the aid of digital computers, and refirming the structural analyses performed on various command module components.

Work on all major command module structural tests has been initiated.

Continuous center-of-gravity checks have been made and various equipment location changes are being considered. Some of the weight trade-off studies that have been conducted on various alternate design approaches are as follows:

(1) Integrated hydrogen generation, carbon dioxide absorption, and waste water utilization versus supercritical hydrogen storage, lithium hydroxide-carbon dioxide absorbent, and stored waste water

(2) Lithium hydroxide-carbon dioxide absorbent versus sodium dioxide absorbent oxygen production

(3) Apollo expendable weight items

(4) Food and oxygen requirements plus carbon dioxide absorption

(5) Electrical initiation systems for design pyrotechnic devices

(6) Supercritical oxygen nitrogen storage weight versus leakage rate

(7) Present heat shield deployment landing system versus proposed independent deployment landing system

(8) NASA requirement, electrical connector mating continuity check-out

(9) Installation weight of in-flight test and GSE test

(10) Recessed versus flush window installation

(11) Potential weight reduction by elimination of present reentry oxygen subsystem

During the last quarter, a study was conducted to improve the concept proposed for the air lock and docking system.

Command module to command module mating was chosen for this study on the ground that is inherently more difficult to achieve a sealable joint between two identical elements than to design a matching female-type element on such future modules as a space laboratory on a lunar shuttle vehicle.

Any study of space docking must assume that one module may be navigated in direction and velocity on a closing course with its objective and brought to identical speed when in close proximity. Final air lock mating can be effected mechanically by remote control, or manually.

BOILERPLATES

Progress has been achieved in the design of the boilerplate command modules during the second quarter of 1962. The major parts of the design effort and engineering drawing release have been completed on boilerplate command modules 1, 2, 3, and 19. These are constructed of aluminum alloy plate and heavy sheet material welded into a homogenous structure.

The command module test vehicles to be used for flight tests must withstand higher structural loads than drop test articles. The outside configuration was changed during this period to conform to the approximate ablative mold line of the spacecraft module.

The basic structure has been designed and released, with the exception of portions of the forward compartment which have undergone changes in design concept. The aft heat shield consists of laminate facings and an aluminum honeycomb core to form a sandwich structure simulating the stiffness of the spacecraft article.

Engineering information was released for construction of mock-up 8 (airlock and docking), mock-up 10 (life systems), mock-up 12 (crew support) and mock-up 18 and 19 (complete Apollo spacecraft).

Major effort during this quarter was expended to complete the configuration control of mock-up 3 (cabin interior arrangement) mock-up 4 (partial service module and adapter interface), mock-up 5 (cabin exterior equipment), and mock-up 7 (complete service module) to reflect the latest design configurations. An engineering inspection of mock-up construction (see Appendix) took place on 18 June 1962 to evaluate spacecraft design.

ADAPTERS

Adapters have been designed and released for boilerplate 6, 9, 13, 15, and 20.

[redacted]

DESIGN AND TEST

During this quarter, basic design layouts of the command module outer structure have continued to 75 percent of completion. Preparation, release, and maintenance of detail hardware drawings reflecting the configuration adopted during this period are well underway.

Definition of cutouts, maintenance panels, windows, and umbilicals in the heat shield will be established. The configuration control drawings governing these areas will be prepared and released. Basic design layouts defining the complete configuration are scheduled for completion during the next period. (Development tests will be performed to support the heat shield design.)

Mechanical and physical property tests, structural integrity tests, vibrational and acoustical tests, and thermodynamic tests are scheduled for the next quarter.

Work has been started on the design and development of a high-temperature volume expansion measuring apparatus. This will permit the determination of the temperature-density variations of solid materials.

A survey of the solid dry-film lubricants that may be applicable to the Apollo modules is under way. Preliminary lubricant and substrata pretreatment procedures have been suggested for the crew attenuator strut of the command module. A modified thermosetting silicone is the lubricant under consideration.

Fabrication of Rene 41 alloy honeycomb sandwich panels using the two selected alloys to establish reliability and structurals strength in environments from 75 to 2000 F will continue.

The honeycomb structure evaluation program will include a metallurgical study of the fabricated test specimens to determine structural integrity and testing of ablative covered panels.

Plans of action to determine thermal properties for honeycomb sandwich composites and ablative materials were written. The properties to be determined are specific heat, specific volume, thermal conductivity, and apparent thermal conductance.

Stresskin

A subcontract for test specimen compounding and fabrication of elastomeric materials will be released by 25 June 1962. Test specimens

will include approximately 16 different types of elastomeric materials. (Testing will be initiated in July on the first eight test specimens fabricated.)

Boiler Plate Impact Attenuation Tests

The preliminary facility drawings and facility design criteria have been submitted to NASA and have been approved.

Negotiations for detail design of the facility tower are in progress between S&ID and contracted architect-engineer. Receipt of architectural-engineering design proposal, completion of facility design, and start of construction will take place in the following quarter.

Detail design of facility components (pendulum arms, support platform, and module stabilizer rig) are in progress and will be released in July.

Boilerplate 1 is scheduled for delivery 1 September.

Plans have been completed for conducting preliminary drop tests (vertical drop path) from a mobile crane prior to completion of the test facility. A temporary water facility on the same site as the ultimate water impact test area is planned for use for module flotation characteristics study. This study is planned for August 1962.

Impact Attenuation Component Tests

The drop test fixture to be used for these tests is nearing completion.

Testing of the individual shock struts on this fixture will begin in early July.

Static testing of strut core samples and various proposed strut core materials is under way and will continue until drop tests begin. This testing will continue in conjunction with the drop test.

Test condition analysis and the design of the following test fixtures will be the prime areas of effort during the next period:

ATR 100 Separation System, command module from service module
ATR 102 Separation System, escape tower from command module
ATR 104 Crew couches and shock attenuation system
ATR 106 Pressure compartment access
ATR 108 Forward compartment heat shield release system
ATR 109 Heat shield release mechanism (Aft)
ATR 201 Landing impact and stability, land and water

[redacted]

ATR 209 One and two command module aft compartment heat shield and base structural component tests
ATR 210 Two command module sidewall structural component tests
ATR 301 Three service module firewall heat shield
ATR 301 Five service module radial shear web
ATR 304 Aft bulkhead structural components
ATR 401 Spacecraft adapter "blowaway" section tests
ATR 500 Launch escape tower static structural tests
ATR 205 Vibration test of typical structural panels

TRADE-OFF STUDIES

Effort on design and weight trade-off studies continues. Emphasis is on weight increments associated with configurations designed with optical windows exposed during reentry, provisions for a water landing only, improved load paths in the parachute compartment and air lock area, and direct shear and tension ties between the command module and service module through the aft heat shield.

A test and investigation program of energy absorption materials is being conducted and will continue into the next period.

Use of crushable honeycomb as an energy absorption device has unexplored areas relating to consistency and load-weight ratios. Other materials and devices are also under study, including such concepts as the "cone-in-coil" that uses a conical frustrum as a wedge to expand a cylindrical coil of filament fibre in a circumferential mode.

A trade-off study of all the various methods of shock attenuation has been written. This research into attenuating devices and materials is to back up the test programs for couch and heat shield shock strut systems.

The drop testing of individual shock strut assemblies to determine load-stroke curves is scheduled early in the next period.

Uplatch assemblies will be cycled under varying loads to confirm minimum release force and latch reliability. Complete heat shield latch systems will be rigged and test fired in ground stands.

Until tower facilities are erected, dynamic shock strut tests will be conducted employing release from mobile cranes over a prepared soil bed and a water-filled pit.

Shock strut load-stroke data will be recorded from stain gages and potentiometers, and g forces will be determined from accelerometers attached to dummies on boilerplate couches.

Additional aft heat shields and forward compartment covers will be provided to support the total test requirements for both land and water tests including the air drops.

Effort will be directed toward incorporating changes to the basic command module structure to reflect individual requirements determined by the test objectives and results.

MOCK-UP

Mock-up 4 interface service module to adapter has been completed on schedule.

Mock-up 9, service module handling and transportation, is progressing on schedule. This unit will be built and ballasted to represent spacecraft static weight. Mock-up 9 and 11 will be modified to reflect the increased length of the service module.

The service module and adapter designed for boilerplate 9 will be used as an adapter for the Little Joe II articles unless the flight load requirements are altered.

Mock-up 7 will be revised to incorporate the increased length and rearrangement of components within the unit.

Engineering information will be released to incorporate the changes determined by engineering inspection of mock-up 3 and 5.

Effort will be expended on coordination, design, and engineering information release for construction of mock-up 18 and 19 (complete Apollo spacecraft).

FABRICATION

Boilerplate 1 has progressed to 65-percent completion. Initial fabrication of boilerplate 3 and 19 began during this period. They are 33-percent and 20-percent complete. These articles reflect a behind-schedule condition of 7 weeks for boilerplate 1, 8 weeks for boilerplate 3, and 9 weeks for boilerplate 19. The heat shield required for all command module boilerplates presents a formidable problem because of cracking. Forming of these heat shields has resulted in cracks that invariably cracked again when rewelded and reformed. There is the tentative possibility of fiberglass construction of the heat shield because of this problem.

The vertical struts and detail parts for the horizontal struts of the impact attenuation system for boilerplate 1 were completed during this period. Assembly of the horizontal struts awaits release of the honeycomb cores being tested. All detail parts of the seat attenuation system for boilerplate 1 were completed.

Mock-up 3 (cabin interior arrangement) and mock-up 5 (cabin exterior equipment) for the informal review between S&ID and NASA were completed. The comments and suggested changes are being reviewed by the Apollo chief engineer.

In May, Rocketdyne was given the authorization to fabricate high-energy sizing dies for the final sizing of command module boilerplate aft bulkheads and heat shield skins. These dies will be completed and the first test firing will take place in July.

During the next period, mock-up 2 (cabin interior arrangement) and mock-up 8 (air lock and docking) will be completed. Command module portions of mock-up 9 and mock-up 11 (handling and transportation), mock-up 10 (life systems), and mock-up 12 (crew support systems) will be completed. Boilerplate 1, 3, 9, and 19 will be completed. The vertical and horizontal struts for boilerplate 2, 3, 5, and 20 will be completed and fabrication of the struts for boilerplate 9, 21, and 23 will have started.

The aft heat shield release mechanisms supporting boilerplate 3 and 19 and the seat attenuation systems for boilerplate 1 and 2 are to be completed.

SERVICE PROPULSION SYSTEM

PROPELLANT SYSTEM

During the reporting period the decision was made to utilize the service module reaction control system engines to settle service propulsion system propellants. This eliminated the need for a positive expulsion device in the service propulsion system propellant tankage. In conjunction with this decision, the series-feed tank arrangement was selected. Design mission requirements, including a 6-day lunar orbit mode, increased propellant tank capacity thereby initiating a new tank arrangement study to save overall module weight. The decision was also made to design a pressurized wet-propellant system.

PRESSURIZATION SUBSYSTEM

Design layouts and detailed analysis of the system will continue. System parameters will be refined to meet the finalized engine requirements and to obtain optimum mission objectives. Preparation of detail drawings will begin during the next reporting period.

TANK CONFIGURATION AND DISTRIBUTION SUBSYSTEM

To meet schedule commitments, design effort will be expanded because of the configuration changes noted in the data section.

PREFLIGHT RATING TEST ENGINE TEST STAND

Engineering drawing release will be initiated during the next reporting period. All purchase requests for test stand equipment are scheduled for release. Coordination meetings between S&ID representatives and the engine supplier will be scheduled. Suitability tests of individual components and subsystems will continue.

HARDWARE

Issuance of request for proposals, proposal evaluations, and procurement of components will be initiated. It is expected that considerable effort will be required for specification refinements and supplier coordination during the proposal and procurement period.

CONFIDENTIAL

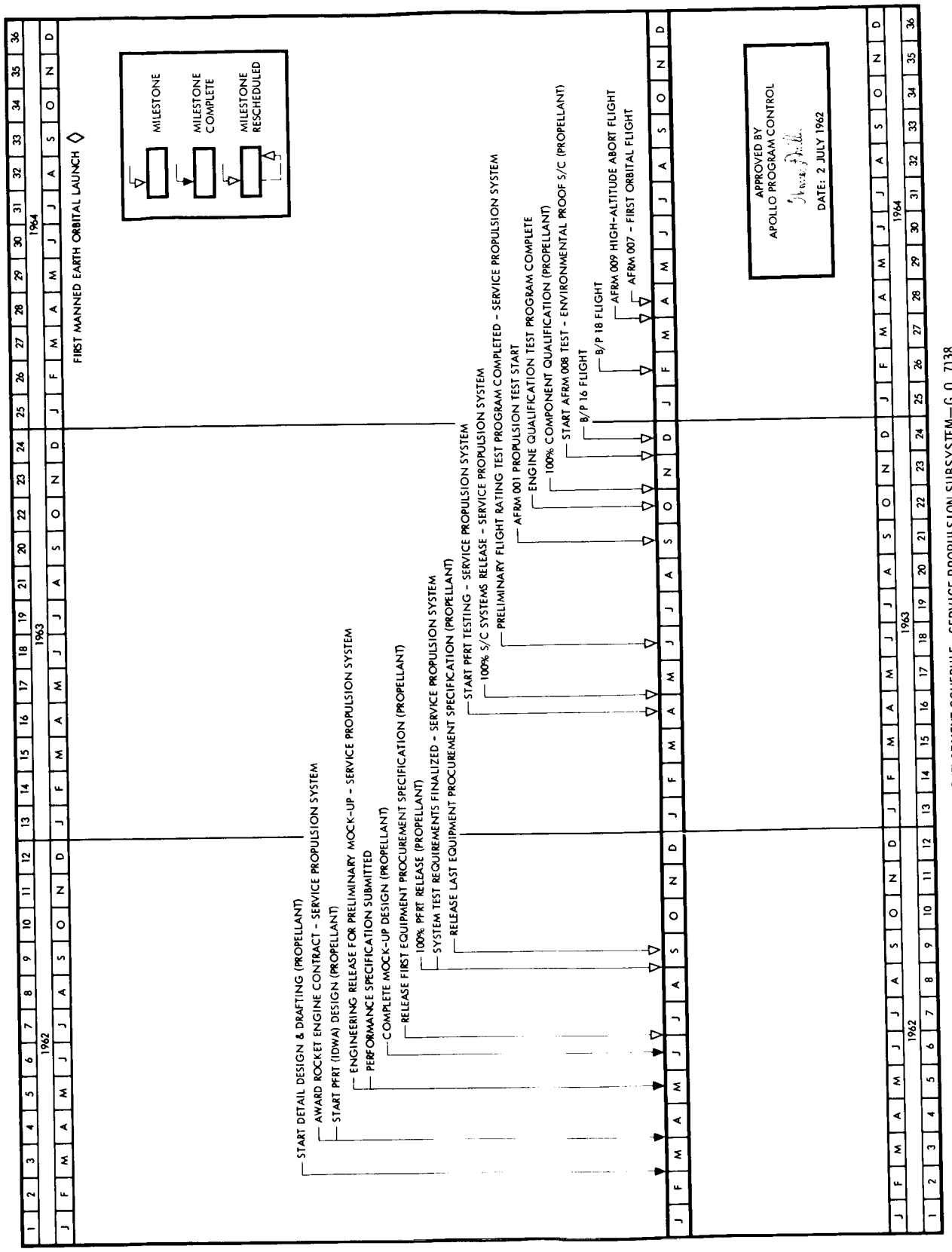

GENERAL ORDER DEVELOPMENT SCHEDULE—SERVICE PROPULSION SUBSYSTEM—G.O. 7138

CONFIDENTIAL

PROPELLANT UTILIZATION AND GAGING SYSTEM

Request for proposals will be issued, proposals will be evaluated, and the system will be procured. Refinements will be made to the specification as required for the particular system. Engineering coordination with the supplier will be initiated.

MOCK-UP 7

Additional distribution system lines will be added, and design layouts will be submitted to reflect system changes necessitated by requirements for additional quantities of fuel and oxidizer.

ENGINE INSTALLATION

During the next reporting period, all engine to vehicle interfaces will be established and layouts of the engine and associated equipment installations will be completed for the boilerplate vehicles.

ENGINE PROCUREMENT

The engine procurement specification will be finalized and released as will be a new specification defining the documentation required of the engine supplier.

TEST PLANS

The Aerojet test plan will be finalized and submitted for NASA review. The qualification/reliability test plan, after finalization, will be incorporated in the engine procurement specification.

[redacted]

SERVICE MODULE STRUCTURE AND SUBSYSTEM INSTALLATION

Drawings have been released to manufacturing for test panels that will be used to confirm design of the static test service module.

Propellant tank access door seal test drawings have been completed and released.

An adapter test panel drawing has been released to manufacturing.

Layouts and details for mock-up support of all systems equipment mounting provisions for the RCS was completed.

During the next reporting period, design approach to the structure will be finalized, size will be determined, and first production drawings will be released.

New layouts of the propellant and helium tanks showing the effect of resizing service module structure will be released.

Adapter design will be completed.

Location and configuration of RCS engines and related equipment will be established.

Adequacy of structural panels, honeycomb bonding, and honeycomb thermal conductivity and transfer levels will be determined.

The requirement and location of a personnel ladder on the service module and adapter for lunar landing and exploration requirement will be determined.

Service module and adapter access including servicing requirements for launch complex 37 will be delineated.

All equipment mounting provisions requirements in procurement specifications will be incorporated.

SERVICE MODULE STRUCTURE AND SUBSYSTEM INSTALLATION

All drawings, except the ballast drawing for boilerplate 9, 13, and 15, were released. Assembly tooling has been completed.

CONFIDENTIAL

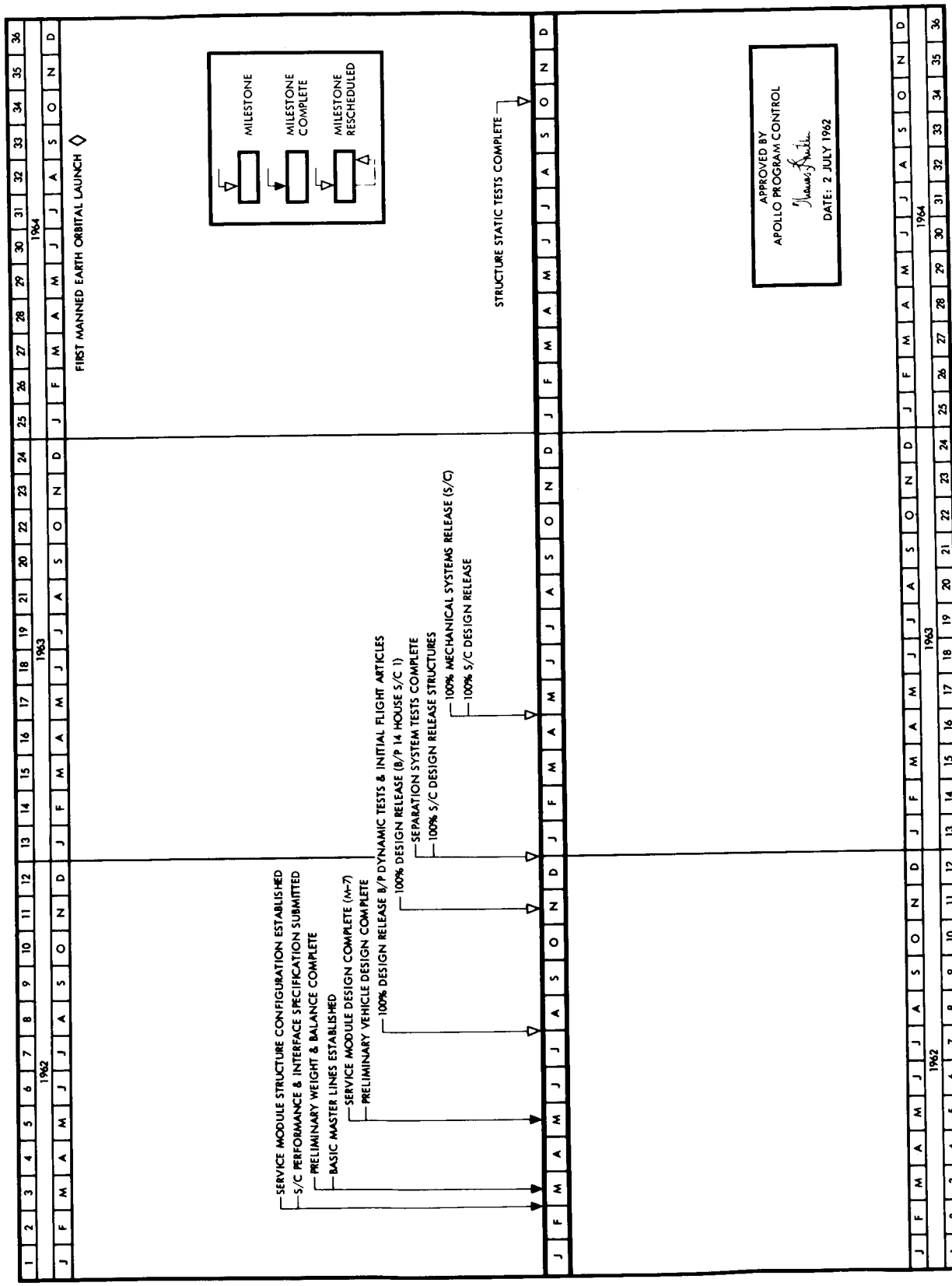

GENERAL ORDER DEVELOPMENT SCHEDULE—SERVICE MODULE STRUCTURE AND SUBSYSTEM INSTALLATION—G. O. 7139

CONFIDENTIAL

During the next period, boilerplate 9 is to be completed and mock-up 16 (partial service module) and mock-up 17 (service module and adapter interface) are to be begun.

CONFIDENTIAL

[redacted]

ELECTRICAL POWER SYSTEM

FUEL CELL

The fuel cell system instrumentation list requirements were completed for GSE and in-flight checkout.

A preliminary fuel cell test program was completed as a planning aid. These tests will be conducted to determine the effects of operating variables on fuel cell performance.

A fuel cell heat rejection evaluation was made to establish the possibility of integrating the fuel cell and environmental control system radiators into a single system.

Fuel cell gas supply requirements were analyzed, and a cryogenic tank proposal evaluation was initiated as an engineering aid and to assure conformity with the fuel cell system requirements.

The specifications for components of power distribution system have been completed.

Design drawings of pyrotechnic circuitry for pad abort Little Joe II and SA-5 were completed.

Laboratory tests were initiated to determine the dimming, heat dissipation-to-structure performance, and reliability of flourescent lighting under vacuum, vibration, and environmental conditions.

S&ID has completed the layout required for the volume of the electrical power control of subsystems in the right-hand spare parts bay.

The fuel cell system installations design was completed.

During the next period, the preliminary radiator design configuration will be completed and preliminary tests will be run.

Analytical and design review effort will be continued toward evaluation of design and test plans.

The battery charger specifications will be evaluated.

[redacted]

[redacted]

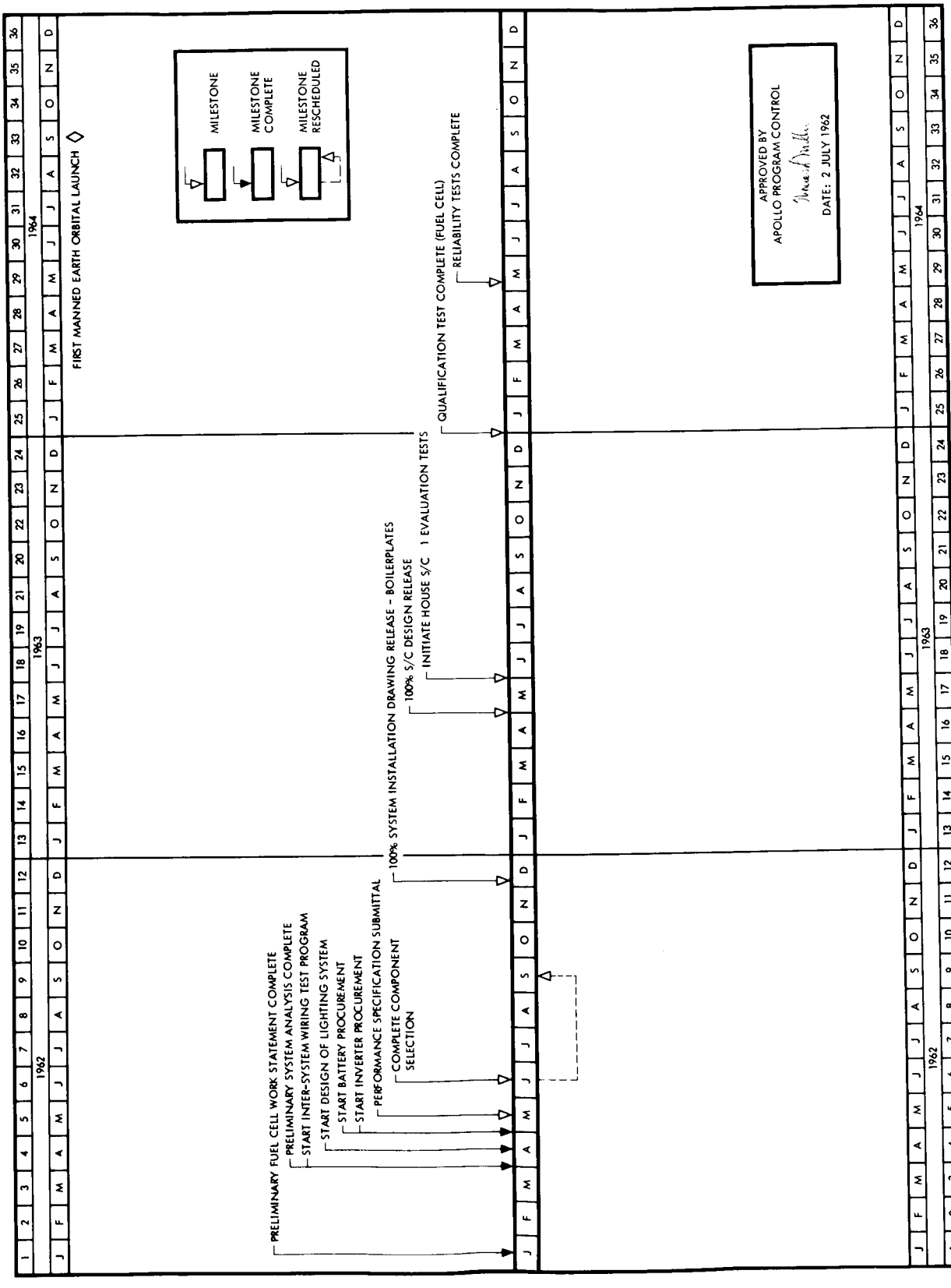

GENERAL ORDER DEVELOPMENT SCHEDULE—ELECTRICAL POWER SUBSYSTEM—G. O. 7140

[redacted]

Procurement specifications are to be prepared for distribution for miscellaneous system components.

The relay sequences for the first five vehicles requiring the subsystem are to be designed.

A procurement specification for the explosive bridge wire (EBW) initiation system for the operational vehicle will be released.

Testing and evaluation of the EBW system components are to be continued.

Initial design effort of the SA-5 system will be completed.

S&ID and the subcontractor will complete the functional schematic and layout to conform to pyrotechnic, weight, and volume requirements.

All pyrotechnic specifications will be released.

The specification on separate fuel cell radiators will continue.

Investigation will continue into wiring and termination techniques. Investigation of umbilical connectors will be continued to meet the environmental requirements of the Apollo spacecraft.

The sequencer design for both boilerplate and spacecraft vehicles will be finalized to conform with decisions on heat shield deployment and thrust vector control.

Testing will continue to determine the most suitable types of protective devices, circuit breaker, and fuses. Further studies and testing will be conducted on lighting systems and their components, specifically in the areas of reliability, low-temperature operation, and dimming methods.

REACTION CONTROL SYSTEM (RCS)

PROPELLANT SYSTEM

The command module RCS is basically similar to the dual systems A and B presented in the NASA Statement of Work.

After extensive study of several service module RCS configurations, a quadruple modular system was selected as the optimum design. Present design layout effort is directed toward installation of this configuration.

ENGINES

The preliminary procurement specifications for the command and service module reaction control engines were completed during this period. Specification control drawings defining the design requirements of the command and service module engines were released.

PRESSURIZATION SUBSYSTEM

During the next period, design layouts and detailed analyses of the pressurization systems will continue. System parameters will be refined to meet the final engine and mission requirements.

Design effort on the command module RCS tank configurations and distribution subsystem will be expanded to meet schedule commitments.

Refinement of the reliability and weight analysis is being expedited to assist in the establishment of a final evaluation of the service module RCS tank configuration and distribution subsystem. Design effort is being expanded on this concept consistent with schedule commitments.

MATERIAL AND PROCESSES

Seal evaluation using test hardware will be completed, and the best seals will be selected for evaluation using flight weight test fixtures hardware. The test phase employing the actual propellants will be initiated.

The complete evaluation of the most promising nonmetallic materials will be started during the next period. Evaluation will include determination of compression set resistance, low-temperature properties, tear strength, and flexibility.

Titanium compatibility immersion tests on available sheet and hand-forged and heliarc fusion-welded specimens will be initiated. Stress corrosion specimens will be fabricated to give several stress levels and will be exposed to the oxidizer.

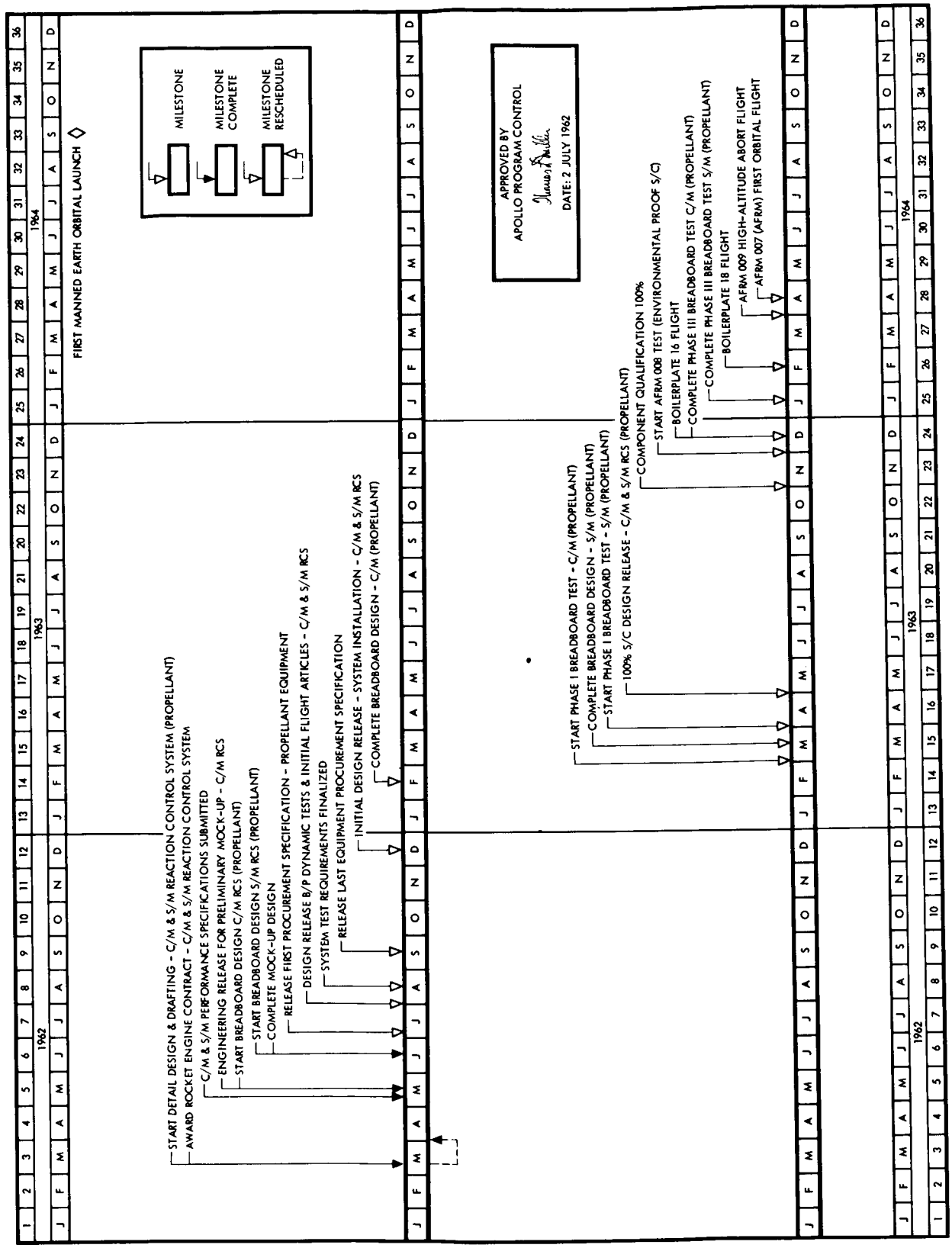

GENERAL ORDER DEVELOPMENT SCHEDULE—REACTION CONTROL—G. O. 7141

Compatibility of various brazing alloys will be determined with system propellants, design brazing hardware and tooling. A brazing process will be developed and specimens will be evaluated. Special equipment for fusion welding tube joints will be designed and evaluated.

The solubility of helium in the propellants will be determined under pressures from 150 to 240 psi at temperatures of 150 to 240 F.

BREADBOARD DEVELOPMENT TESTING

Command Module

The fabrication of the test fixture will be complete during the next period. Phase I components will be procured and functionally tested following delivery. Installation of the components in the breadboard fixture will be initiated. Special test equipment and instrumentation will be ordered.

Service Module

The major portion of the fabrication of the breadboard test stand will be completed during the next quarter. Phase I components will be procured and functionally tested following delivery.

RCS MOCK-UP (COMMAND MODULE NO. 5)

Test ports currently mounted on the propellant system panel installations will be moved to a manifold mounted near the outer periphery of the lower equipment bay.

ENGINES

During the next period, the following programs will be completed:

(1) The RCS duty cycle will be established.

(2) The requirement for low-thrust vernier engines in the service module RCS will be resolved.

(3) Effect of scarfed nozzle extensions on engine performance and thrust vector deflection will be determined.

(4) A firm decision on the necessity of a third coil in the solenoid valves will be made. This coil will be employed during emergency or manual operation of the engines.

(5) The solenoid driving circuit will be defined and employed in test activities.

The studies noted below have been initiated and will continue through the next reporting period.

(1) Use of solenoid valve current and voltage traces in electronically establishing valve synchronization during acceptance testing

(2) Effects of hard vacuum and radiation bombardment on materials employed in the rocket engines

(3) Meteorite bombardment of the service module rocket engines

(4) Use of highly reliable redundant mechanical joints where welding or brazing is not possible

SPACECRAFT ADAPTER DESIGN

The spacecraft adapter will consist of a cylindrical honeycomb shell made of six 60 degree sectors. These sectors will be attached longitudinally to six longerons. The purpose of the longerons is to redistribute the loads from the six attach points between the service module and adapter shell.

At each end of the adapter there will be a frame to redistribute the shear load into the adapter shell. At the forward end there will be six shear pins to transfer the shear load from the service module into the adapter. At the aft end there will be 32 equally spaced bolts to transfer the shear load from the adapter into the booster.

The material for the adapter will be aluminum, either 2024-T3, 7075-T6, or 7178-T6 depending on the temperature distribution during the mission.

The adapter will have one large access door. This door will be made of honeycomb, will be similar in design to the rest of the outer shell, and will be structural to provide load continuity across the door.

One honeycomb panel, consisting of one 60 degree sector of the outer shell, and typical longerons will be tested to destruction under simulated body loads. This panel will have a typical access door. The panel will be adequately strain gaged to determine the actual redistribution of loads and to compare this redistribution with the analysis distribution.

Two adapters are being designed, one for the C-1 loads and the other for the C-5 loads in order to save weight for the C-1 configuration.

CONFIDENTIAL

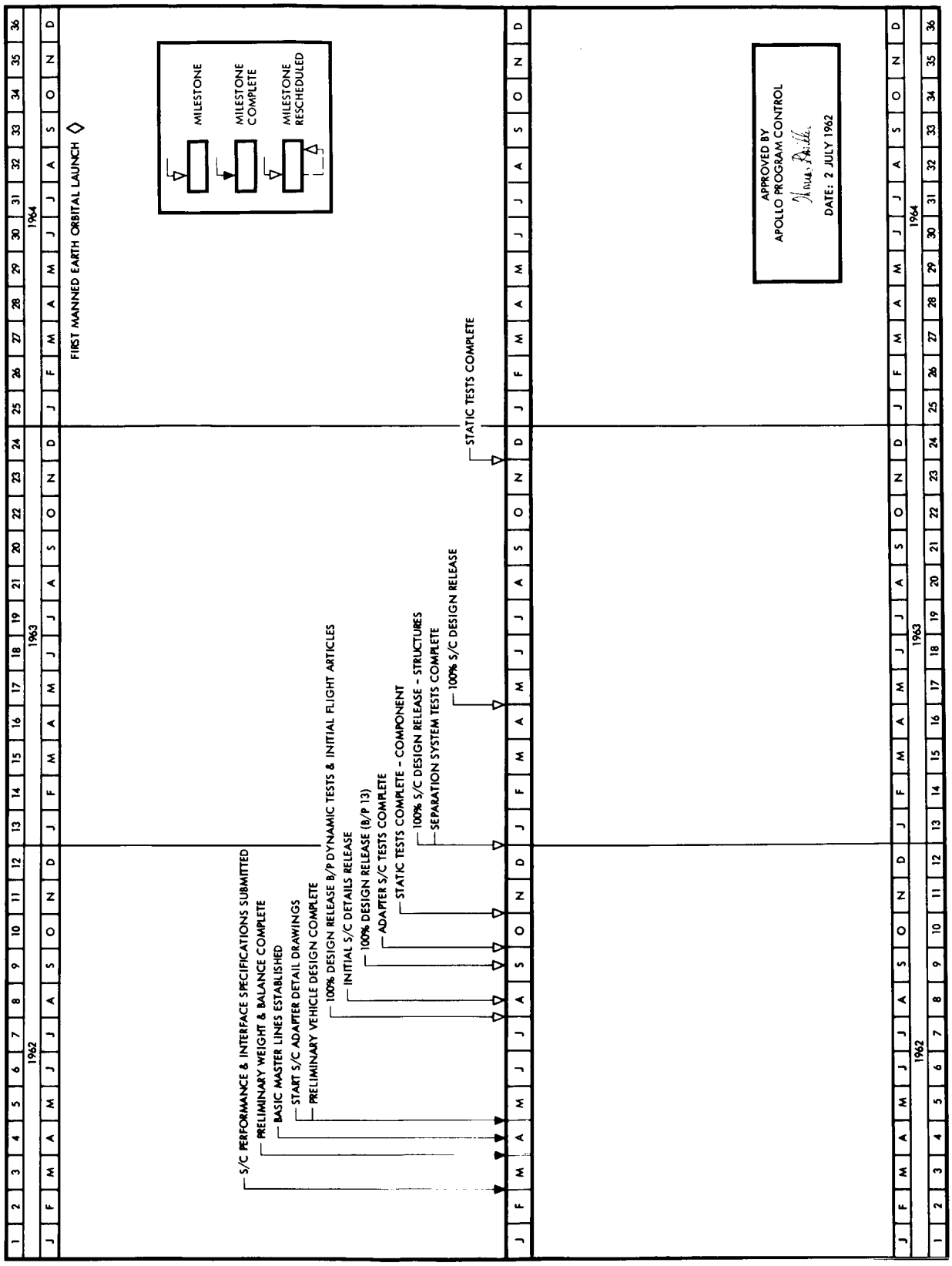

GENERAL ORDER DEVELOPMENT SCHEDULE—SPACECRAFT ADAPTER DESIGN, FABRICATION, AND ASSEMBLY—G.O. 7142

SPACECRAFT GROUND SUPPORT EQUIPMENT

A survey of the logical building block modules was performed to determine their suitability for GSE systems. Recommendations for standard modules and a standard set of logic symbols were published.

Briefings on the GSE concept were given to the GSE design groups, the associate contractors, and the major subcontractors.

Detailed preliminary studies were completed on the GSE self-check requirements and overall plan, the limiting criteria which affect the choice of checkout computer, and a generalized information and computer flow diagram.

Shop releases were made of GSE requirements for boilerplate 1, 2, 3, 5, 6, 9, 13, 19, and 20.

The specification "Apollo GSE Special Purpose Electrical Cable Assemblies" was prepared. Work was started on cabling block diagrams for the test articles. Diagrams for boilerplate 6, 20, 12, and 15 were completed.

Checkout and maintenance concepts were established together with firm equipment requirements.

Collins Radio has started detail design and procurement specification effort on bench maintenance equipment and test equipment.

Preliminary alignment and center-of-gravity requirements were established for the main motor, jettison motor, and tower structure.

Requirements for the protective covers and ground handling equipment for the launch escape systems were determined.

Preliminary flight schematics for the LES have been reviewed; and recommendations made as to the number of GSE test points required to meet reliability goals.

The extent of ground handling GSE that Northrop-Ventura will require for the parachute subsystem was established; the applicable drawings were released; and the GSE was ordered.

The man simulator was designed and fabricated, and the electrical bench check stand was designed and is in fabrication.

An SCS-GSE requirement schedule including associated GSE was established.

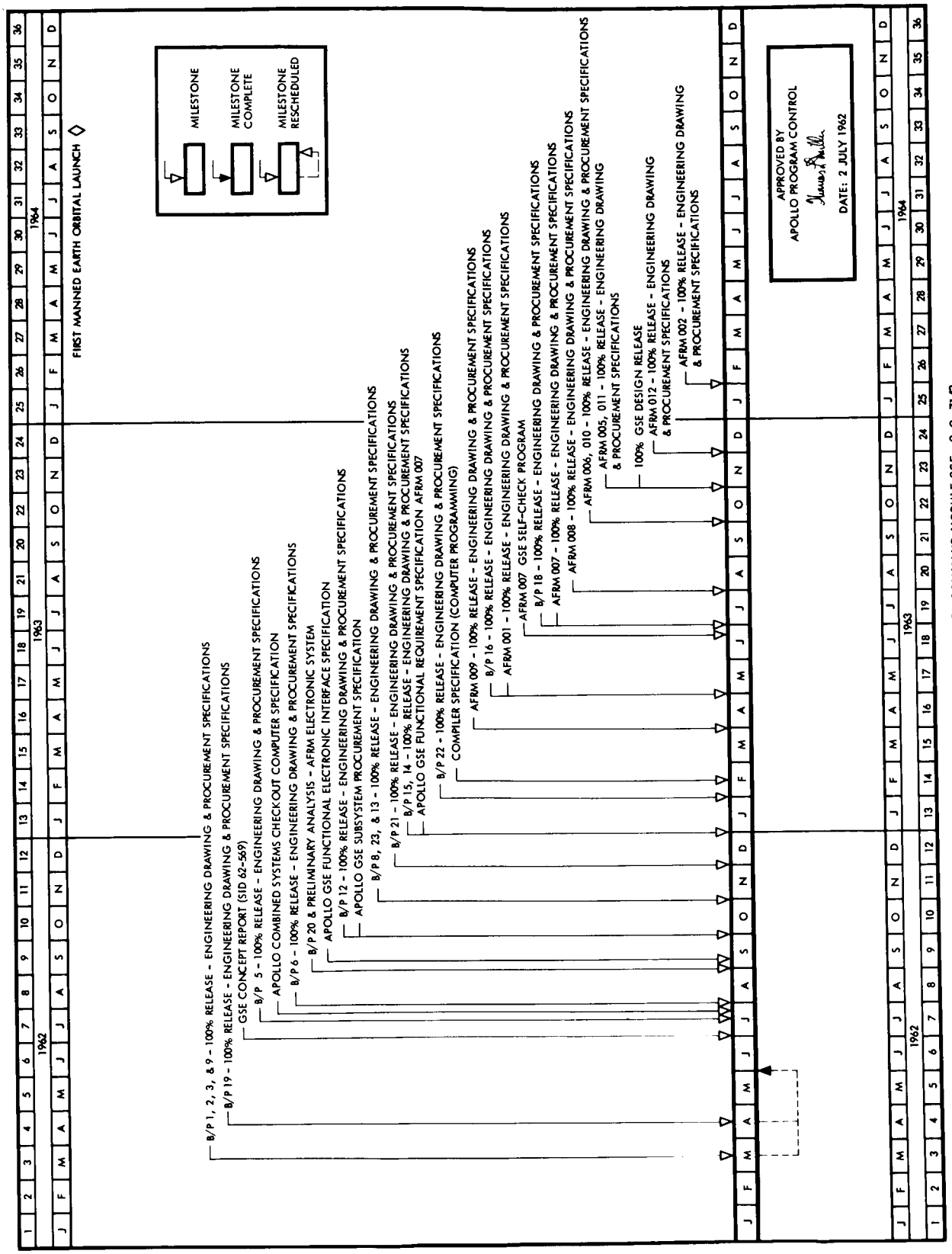

GENERAL ORDER DEVELOPMENT SCHEDULE—COMMAND MODULE GSE—G. O. 7143

Procurement specifications for the LESCS-GSE and SCS bench maintenance GSE were prepared.

Briefings were held between S&ID and MIT to establish concepts for navigation and guidance GSE Checkout. These concepts were considered in terms of Downey and AMR technical and configuration concepts. MIT planning is based upon control room allocation on a subsystem basis at the AMR spacecraft operation and checkout facility. The S&ID concept provides for a unified control room with one control room supporting each test vehicle and all subsystems.

The GSE requirements for the service module propulsion system checkout group, Phase 1, were completed. Standard equipment is available that can be modified for actuating and gimbaling the engine.

The GSE requirements for the command module and service module propulsion checkout group, Phase 1, were completed.

The GSE requirements for the launch escape motor, Phase 1, were completed.

During the next period the review and analysis of the prototype spacecraft checkout requirements will be completed. The following documents will be prepared: Apollo GSE computer specification; control room and SCVE logic diagrams; GSE self-check specification; Review and updating of GSE Performance Specifications, SID 62-50 and SID 62-57 and GSE hardware lists, SID 62-421 and SID 62-564, will continue.

Flow charts will be prepared showing the usage and disposition of individual GSE items beginning with first usage and on through the test articles.

Work will continue in defining requirements for GSE cables.

Effort will be continued toward the definition of test site and facilities requirements and their effect upon specific requirements.

Equipment drawings will be completed and released.

Procurement specifications will be completed.

Hardware manufacture will commence.

Analysis and approval of specifications will be continued.

The possible application of DOD equipment to the recovery operations will be investigated.

Recovery missions will be analyzed, and equipment and operational plans for the recovery operations will be recommended.

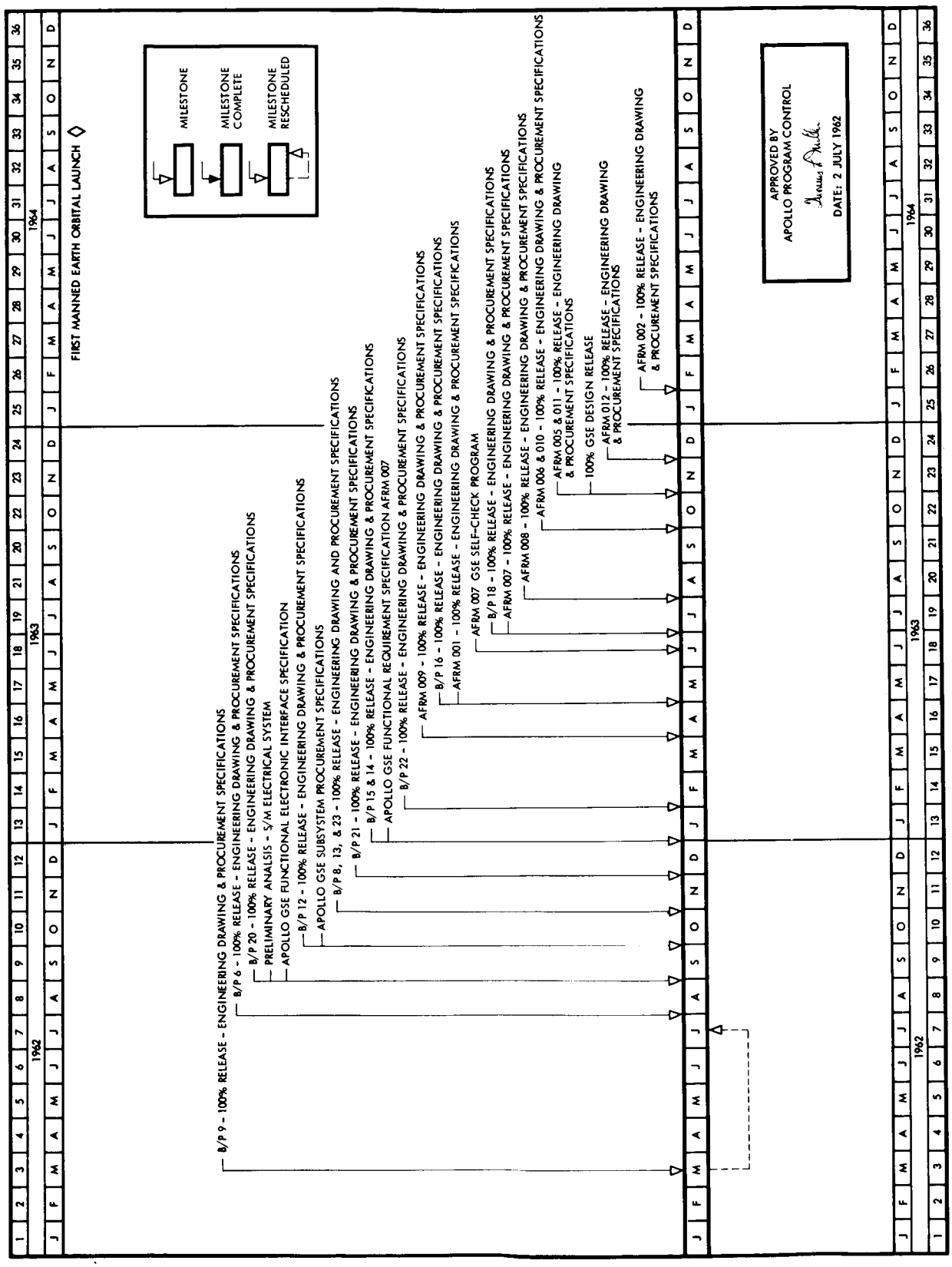

GENERAL ORDER DEVELOPMENT SCHEDULE—SERVICE MODULE GSE—G. O. 7144

The GSE performance and interface specifications for boilerplate 3, 5, and 19 will be completed.

The checkout procedures for the SESCS will be prepared.

Work will start on engineering evaluation tests of the LESCS GSE at S&ID.

Drawings of the SCS bench maintenance GSE will be reviewed for design approval.

Fabrication will start on the first SCS bench maintenance GSE.

The subassembly requirements of the SCS system checkout equipment will be defined and procurement specification prepared.

The interfaces of the SCS system checkout GSE and the data transmission system will be defined.

The checkout concept will be integrated into the design of the checkout console.

The reliability program for GSE will be defined.

Breadboard GSE will be designed, and fabrication will be started.

Design effort will continue. An investigation will be made of the White Sands blockhouse facility to determine the required launch control complex configuration.

Circuit breadboarding and prototype equipment development will be initiated.

Information accrued during this period shows that GSE completions are the probable pacing factor in the early phases of the Apollo program. Preliminary analysis based on available engineering information, manufacturing time spans, and the dates GSE will be required shows articles behind schedule. Engineering drawing release curves indicate 579 GSE drawings are currently behind schedule.

[redacted]

GROUND OPERATIONAL SUPPORT SYSTEM (GOSS)

The GOSS equipment specification (preliminary) was submitted to NASA.

The first revision to the GOSS system specification was completed.

Significant progress in defining the spacecraft information flow was accomplished through analysis of spacecraft mission events. A set of GOSS station locations was selected and is undergoing final checks for acceptability.

The first revision of GOSS specification, SID 62-76, will be completed and submitted to NASA in July.

The first revision of GOSS specification, SID 62-77, will be initiated.

Operations analysis effort on information flow, operational concepts, mission analysis, and station location selection will be continued.

A radar reflectivity study will be pursued, pending NASA approval, by preparation of a work statement and selection of a range to carry out the work.

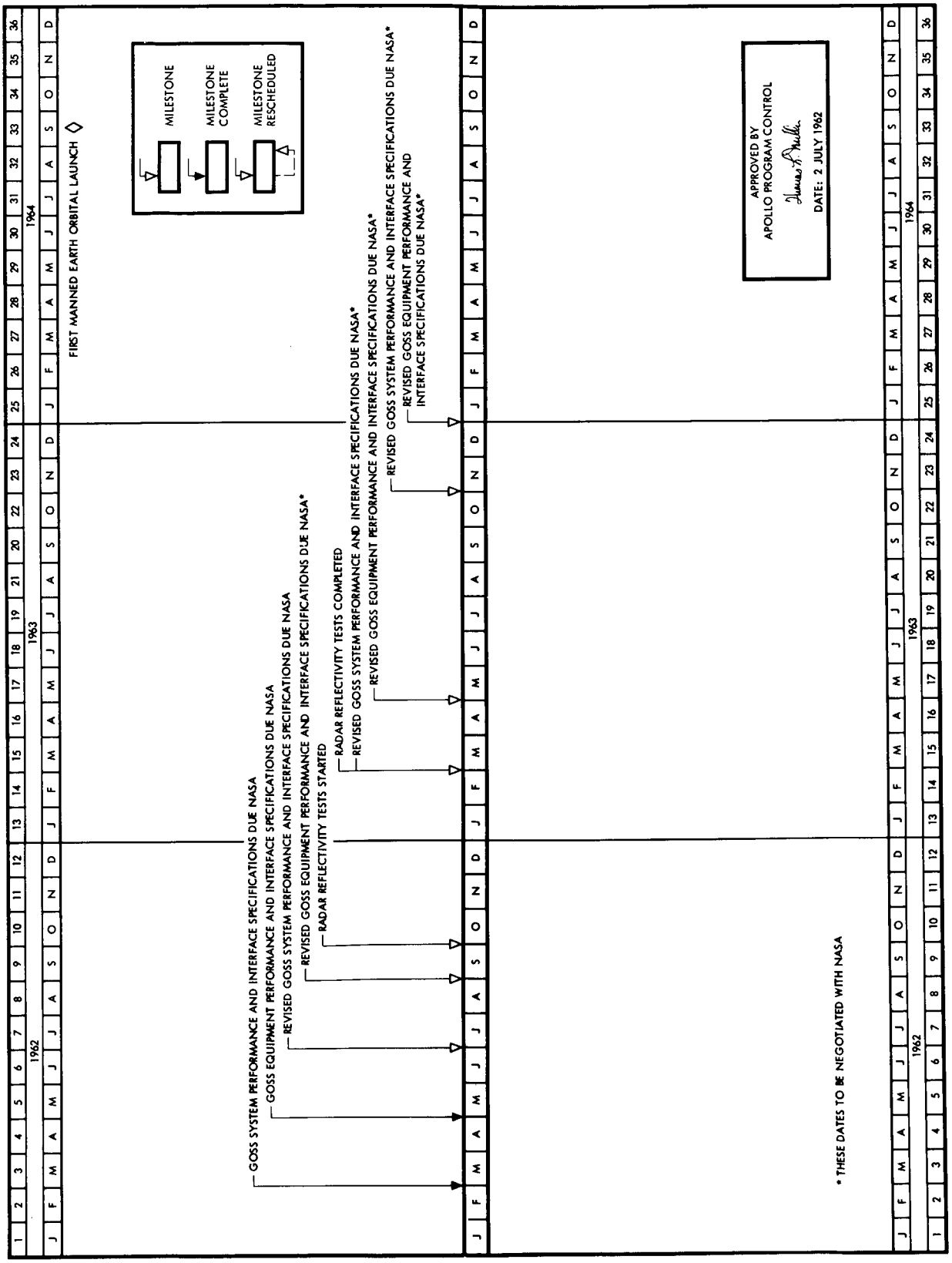

GENERAL ORDER DEVELOPMENT SCHEDULE—GROUND OPERATIONS SUPPORT SYSTEM (GOSS)—G. O. 7145

FACILITIES

PROGRAM MANAGEMENT ENGINEERING AREAS

Program management, engineering, and other Apollo office areas have increased during the past quarter from 45,000 square feet to approximately 120,000 square feet.

Contracts and pricing, quality control, Apollo associate contractor relations, and Apollo plant engineering were moved to Zone 15 as a part of the plan to consolidate Apollo program management functions.

The Apollo logistics department and the Apollo engineering GSE design groups were relocated from Building 6 to Building 1.

As a result of rapid growth of the Apollo program control department and the Apollo contracts function, the plant engineering department was moved during the month of June to office area on the mezzanine. Further expansion of the Engineering area is planned into Building 1.

As a result of a new area plan, the activation of Building 6 by Apollo engineering has been delayed until later in the year; and areas in Building 1 will be assigned to Apollo engineering.

MANUFACTURING AREAS

Training equipment fabrication layouts in Building 43 (Compton) have been completed.

The bonding and test building layout has been completed and revised to reflect the latest program changes.

Facilities' portion of the manufacturing plan was completed during the quarter.

The job order for welding equipment for boilerplate fabrication was released to purchasing.

Facilities construction in Building 43 (Compton) for the training equipment fabrication activity began during June 1962.

The mock-up fabrication group are being relocated to their permanent location during June and July 1962.

A temporary aluminum honeycomb bonding and test area is being set up in Building 1 manufacturing area.

[redacted]

ENGINEERING SUPPORT AREAS

The lack of engineering drawing releases and definitive test plans has held up manufacturing and support area layouts and equipment requirements. A major part of the laboratory test plan has not been definitized at this time and considerable effort is being expended on analysis and investigation to determine the facilities requirements for these areas.

A temporary facility for water flotation testing of the boilerplate command module is being initiated. Detail design for this facility has been completed. This facility will become part of the land and water impact test facility.

An interim facility for the reaction control system laboratory requirements is planned to be in the hazardous test area at the Downey Plant.

FACILITIES PROJECTS

Architectural and engineering criteria for the following facilities have been reviewed with NASA Facilities, and verbal approval has been received subject to minor changes by mutual agreement:

1. Plaster Master
2. Systems integration and checkout
3. Bending and test
4. Impact test
5. Radiographic
6. Parking
7. Building 6 modifications

Architectural and engineering design proposals have been requested for all of the above facilities, except Building 6 modifications. Architectural and engineering contracts will be awarded as soon as funding approval is obtained on the facilities contract. Architectural and engineering selection approval by the NASA has been received.

Facilities Appendix A, Volume II, for the Downey plant facilities has been submitted and reviewed by NASA. All facilities contained therein have been approved with the exception of interior modifications to Building 6 and the Parking Facility, for which additional justification has been requested and submitted.

NASA has forwarded Amendment 3 to the NASA Facilities Contract 7-90 covering Downey Apollo facilities requirements. Authority to obligate funds for architectural and engineering facilities items approved was also

given in this document. S&ID has executed the documents subject to minor modifications and has returned Amendment 3 to NASA for further consideration of the conditional acceptance.

Architectural and engineering criteria for the remainder of the Downey facility requirements are being prepared for submittal early in July 1962.

The Appendix A for the propulsion systems development facility is being prepared and will be submitted when site selection information has been completed and made available.

Architectural and engineering criteria for the propulsion systems development facility are being prepared and submittal is expected early in July 1962.

NASA has notified S&ID that the site of the propulsion systems development facility will be the White Sands Missile Range Area.

[redacted]

Table 2. Apollo Meetings, Second Quarter 1962

Subject	Location	Date	S&ID Representative	Organizations
APRIL				
Coordination of all Apollo test facilities	Houston, Texas	1 - 3 April	McKim	S&ID, NASA
Back-up guidance mechanization of Apollo	Sunnyvale, California	1, 2 April	Timothy	S&ID, Minneapolis-Honeywell
Program schedules, revised program test plan	Downey, California	2 April	Paup Sherman Feltz Fleetwood Crossfield Harvey Warden	S&ID, NASA
A-3 Ordnance system	Sunnyvale, California	2 April	Champaign	S&ID, Lockheed
Electromagnetic interface coordination	Houston, Texas	2 April	Ciglar	S&ID, NASA
Maintenance requirements review and coordination	Cocoa Beach, Florida	3 April	Pollard	S&ID, NASA
S&ID-MIT coordination	Downey, California	3 April	Kennedy	S&ID, MIT
Ablation process factors	Mountain View, California	3 April	Greenschlag Moen Nusenow	S&ID, Ames
Operating procedures, PERT interfaces, IDC's handling of navigation and guidance system	Cambridge, Massachusetts	4 April	Griffith - Jones Campbell Thomas	S&ID, MIT
Ascent guidance and control	Huntsville, Alabama	4 April	Lu Crowder Cooper Stratton	S&ID, NASA
Definitions and guidelines: tooling, facilities	Houston, Texas	4 April	Toomey	S&ID, NASA
Drop test; facility evaluation	El Centro, California	4 April	Stratton Eckmeier	S&ID, Northrop-Ventura
PERT requirements and numbering system	Houston, Texas	4 April	Foist Spencer	S&ID, NASA
NASA orbital flight conference	Washington, D. C.	6 April	Wells	S&ID, NASA
Apollo wind tunnel test planning conference	Mountain View, California	8-14 April	Crowder Ufer Pryor Allen	S&ID, Ames Research Center
Program control techniques, including PERT	Sunnyvale, California	9 April	Dehart Griffall Smith	S&ID, Minneapolis-Honeywell
American Welding Society Convention	Cleveland, Ohio	10-12 April	Olsen	Symposium
Mercury program	St. Louis, Missouri	10 April	Stelzreide	S&ID, McDonnell Aircraft
Presentation at IES	Chicago, Illinois	11-16 April	Stelzreide	S&ID, IES
Technical coordination of SCS	Houston, Texas	10-13 April	Barmore	S&ID, NASA
Studies of fuel cell radiator coating—effects of space environment	Sunnyvale, California	10-18 April	Brewer Blanchard	S&ID, Minneapolis-Honeywell
Maintenance and support plans and handbooks planning	Downey, California	11, 12 April	Johnson	S&ID, Airesearch, Collins, Radio

[redacted]

Table 2. Apollo Meetings, Second Quarter 1962 (Continued)

Subject	Location	Date	S&ID Representative	Organizations
Environmental proof tests discussion and Mechanical integration panel	Houston, Texas	11 April	Walkover Laubach Nicholas White	S&ID, NASA, MSFC
Coordination of facility requirement	Tullahoma, Tennessee	11 - 13 April	McKim Sweeney	S&ID, NASA, AEDC
Test range requirements chute drops	El Centro, California	11 - 13 April	Alevizon	S&ID, NASA
Mechanical integration (panel meeting)	Huntsville, Alabama	11, 12, 13 April	Nicholas Mower Donaldson White Walkover Warner	S&ID, NASA
Coordination for AEDC	Houston, Texas	11 - 13 April	McKim	S&ID, NASA, AEDC
Fuel cell radiator coating and space environment effects discussion	Palo Alto, California	11 April	Barnett Cooke	S&ID, Lockheed
Program control techniques, including PERT	Sunnyvale, California	11 - 13 April	Dehart Griffall Smith	S&ID, Minneapolis-Honeywell
MIT facility requirements	Downey, California	12 April	Campbell Mundy Piroutek	S&ID, MIT
Apollo briefing	Houston, Texas Huntsville, Alabama	12 - 17 April	Ryker	S&ID, NASA
Quality control plan and procurement coordination	Downey, California	13 April	Griffith Jones	S&ID, NASA
Coordination of wind tunnel test, Apollo launch configuration	Langley AFB, Virginia	15 - 17 April	Schurr	S&ID, NASA
Project Mercury Window design, testing, functions evaluation	St. Louis, Missouri	15 - 16 April	Stoll Beam	S&ID, McDonnell Aircraft
Stabilization and control/navigation and guidance interface	Downey, California	16 - 17 April	Campbell Kennedy	S&ID, NASA MIT
Apollo antenna procurement	Houston, Texas	15 - 16 April	Pope Page	S&ID, NASA
Preliminary pretest conference: heat transfer tests, unitary wind tunnel	Langley AFB, Virginia	16, 17 April	Biss Allen	S&ID, NASA
Jet effects testing	Langley AFB, Virginia	16 April	McNary	S&ID, NASA
Apollo analysis and studies	Sunnyvale, California	16 - 19 April	Lu	S&ID, Minneapolis-Honeywell
Technical coordination of SCS	Minneapolis, Minnesota	16 - 18 April	Morris Brewer Blanchard	S&ID, Minneapolis-Honeywell
Western Psychological Association	San Francisco, California	16 - 21 April	Hartman	S&ID, Western Psychological Association
Review of Apollo heat shield statement of work	Downey, California	17 April	Kinsler	S&ID, NASA
Apollo facilities coordination	Edwards AFB, California	17 April	Parker Esslinger	S&ID
Speech to IAS: "Reliability"	Salt Lake City, Utah	17 April	Paup Crossfield	S&ID, IAS Symposium

[redacted]

Table 2. Apollo Meetings, Second Quarter 1962 (Continued)

Subject	Location	Date	S&ID Representative	Organization
Technical coordination and liaison	Cambridge, Massachusetts	17 - 27 April	Zeitlin	S&ID, MIT
Technical coordination of SCS	Minneapolis, Minnesota Cedar Rapids, Iowa	17 April	Fleck	S&ID, Minneapolis-Honeywell, Collins Radio
Data processing recycle	Houston, Texas	17 April	Reed DeRousha	S&ID, NASA
Coordination of quality control facilities at AMR; facilities, material services requirements, and material support procedures	Cape Canaveral, Florida	18 - 20 April	Knoles Ford	S&ID, NASA
Flight safety and mission success briefing	Downey, California	18 April	Paup Crossfield	S&ID, NASA
Service propulsion system specification	Downey, California	18, 19 April	Warden	S&ID, NASA
Navigation and guidance coordination	Downey, California	19, 20 April	Campbell	S&ID, NASA, MIT
Apollo design review	Downey, California	19, 20 April	Feltz	S&ID, NASA
Apollo wind tunnel pre-test conference	Mountain View, California	20 April	Allen	S&ID
Information coordination of data processing techniques, re-ascent guidance, and navigation	Minneapolis, Minnesota	22 April	McAllister	S&ID, Minneapolis-Honeywell
Pretest conference for Apollo wind tunnel model FSL-1	Tullahoma, Tennessee	23 April	Allen	S&ID, Arnold Engineering Development Center
Apollo abort guidance	Cambridge, Massachusetts	23 - 26 April	McAllister	S&ID, NASA
Analytical methods and computer programs for the launch escape system	Minneapolis, Minnesota	23 - 24 April	Dodds Madden	S&ID, Minneapolis-Honeywell
Review of program contract concepts Philosophy and approach	Downey, California	24 April	Brickman	S&ID, NASA
MIT progress review	Cambridge, Massachusetts	24 April	Louie	S&ID, MIT
Convention conference of American Geophysical Union on problems of solar flare phenomena	Washington, D. C. Greenbelt, Maryland Boulder, Colorado	24 - 30 April	Schachter Stazer	S&ID, NASA
Engineering coordination	Houston, Texas	24, 25 April	Gibb Field	S&ID, NASA
Coordination of midcourse interface problems between guidance and navigation system and stabilization and control system	Minneapolis, Minnesota	24 April	Beck	S&ID, Minneapolis-Honeywell
Apollo jettison motor design review	Elkton, Maryland	24, 25 April	Thies Bellamy	S&ID, Thiokol
Maintenance and support plans, handbook plans, and maintenance data	Downey, California	25 April	Johnson	S&ID, Airesearch
Data facility requirements	Houston, Texas	25-26 April	Britton Rutkowski Speck	S&ID, NASA
Navigation and guidance meeting	Cambridge, Massachusetts	25 - 30 April	McAllister Meyers Louie Walker Kennedy	S&ID, MIT

[redacted]

Table 2. Apollo Meetings, Second Quarter 1962 (Continued)

Subject	Location	Date	S&ID Representative	Organizations
Ordnance item installation requirements of launch complex	Downey, California	25 April	Pyle	S&ID, NASA
Discussion of ablatives for Apollo heat shield and the testing of materials considered	Wilmington, Massachusetts	25 - 29 April	Gershun Nusenow Moen	S&ID,
Design progress of service propulsion system	Houston, Texas	25 April		S&ID, NASA, Aerojet-General
Trajectory analysis Preliminary structural design mass and dynamics characteristics	Downey, California	25 April	Ewart Ryker	S&ID, NASA
Meteor protection and structural design	Downey, California	26 April	Overton Ryker	S&ID, NASA
Service module; S-IV design relationships	Santa Monica, California	26 April	Ryker Kennedy	S&ID, Douglas Aircraft
Training information conference	Westchester, California	26 April	Polizze	S&ID, AiResearch
Liaison coordination of navigation and guidance system	Cambridge, Massachusetts	26 April - 11 May	Fatton	S&ID, MIT
Conference on pressure switch tests, uses	Downey, California	27 April	Bowden	S&ID, NASA
IAS conference on manned space flight	St. Louis, Missouri	27 April - 2 May	Carter Peterson Sivak	Symposium
Coordination of instrumentation requirements for boilerplates 6 and 12	Houston, Texas	29 April	Barmore Anderson	S&ID, NASA
Coordination for pad abort instrumentation requirements	Houston, Texas	29 April - 2 May	Hannon Jones Pearce Eckmeier	S&ID, NASA
Reciprocal resident representation coordination	Minneapolis, Minnesota	30 April	Nelson	S&ID, Minneapolis-Honeywell
Discussion of radar requirements for Apollo	Cambridge, Massachusetts	30 April	Kennedy	S&ID, MIT
Technical briefing on communications and instrumentation subsystems	Houston, Texas	30 April	Albinger Pope	S&ID, NASA
Apollo command module ablative panels subcontract coordination	Wilmington, Massachusetts	30 April	Hanifin Kitt	S&ID, RAD Division AVCO Corporation
Investigation of temporary facilities for Little Joe SA-5, SA-6	Cocoa Beach, Florida	30 April	Rigas Wright	S&ID, National Aeronautics SFC
MAY				
Mission reliability, flight safety conference	Houston, Texas	1 May - 10 May	Hayes Myers Henley	S&ID, NASA
Apollo presentation meeting	Washington, D. C.	1 May	Ryker	S&ID, NASA
Communication and instrumentation systems	Houston, Texas	2 May	Pope Albinger	S&ID, NASA
Radar	Cambridge, Massachusetts	1, 2 May	Kennedy Louie Necker Walker	S&ID, MIT

[redacted]

Table 2. Apollo Meetings, Second Quarter 1962 (Continued)

Subject	Location	Date	S&ID Representative	Organizations
Guidance/control interface	Cambridge, Massachusetts	3, 4 May	Lu Antletz Madden Beck	S&ID, MIT
Research and methods for Apollo communication attenuation effects (flow field ionization) Apollo reentry discussion	Hampton, Virginia	3 May	Webb Swift	S&ID, NASA
Coordination of modulation technique studies	Cedar Rapids, Iowa	3 May	Robinson	S&ID, Collins Radio
Ordnance tower Pyrotechnics on Apollo vehicles	Huntsville, Alabama	3 May	White Necker Johannes	S&ID, MSFC
Nuclear radiation shielding	Houston, Texas	3 - 9 May	Clark Pinckney	S&ID, NASA
Propellant components and systems design	Denver, Colorado	3 May	Wagner	S&ID
Maintenance data and support	Downey, California	4 May	Johnson	S&ID
Propulsion, fuel cell, and environmental control systems	Cambridge, Massachusetts	4, 5 May	Jones	S&ID, MIT
Coordination of instrumentation equipment and GSE requirements for boilerplates	Houston, Texas	4 May	Eckmeier	S&ID, NASA
Apollo wind tunnel test coordination	Langley AFB, Virginia	5, 6, 7 May	Pope Vardoulis	S&ID, NASA
Flight controller simulation, GOSS network checkout (Mercury)	Cape Canaveral, Florida	6 - 12 May	Ackerman McCoy	S&ID, NASA
Test site location survey	White Sands, New Mexico	6 - 8 May	Harvey	S&ID, NASA
"O" propellant feed systems	Cleveland, Ohio	7, 8 May	Gibb	S&ID, Lewis Research Laboratories
Simulated Mercury launch	Cocoa Beach, Florida	7 May	Gardner	S&ID, NASA
GSE coordination: navigation and guidance system	Cambridge, Massachusetts	7 - 11 May	Allen Morland Hirahara	S&ID, NASA, MIT
Life systems	Cambridge, Massachusetts	7, 8 May	Blanchard Beam Martin Donaldson Jones	S&ID, NASA, MIT, Minneapolis-Honeywell
Mission reliability and flight safety requirements	Houston, Texas	7 - 11 May	Henley Campbell Walker Crowder	S&ID, NASA
Systems design review Life support and environmental systems	Houston, Texas	7 - 9 May	Morris Brewer Hair Laubach Feltz	S&ID, NASA
Lunar-landing simulation study	Columbus Division Houston, Texas	8 May	Oglevie	S&ID, NASA
GSE and handling of MIT equipment	Cambridge, Massachusetts	8 - 10 May	Campbell Morland Hirahara Allen Hayes	S&ID, MIT
Apollo guidance system reliability	Downey, California	8 May	Hershkewitz	S&ID, NASA

[redacted]

Table 2. Apollo Meetings, Second Quarter 1962 (Continued)

Subject	Location	Date	S&ID Representative	Organizations
Design coordination	Sacramento, California	8, 9 May	Lewin Mower	S&ID, Aerojet-General
Nuclear radiation shielding	Houston, Texas	8, 9 May	Clark Pinckney Mayes	S&ID, NASA
Systems analysis, guidance problems, industrial support	Huntsville, Alabama	8 - 11 May	Cooper	S&ID, NASA, MIT
Documentation coordination	Langley AFB, Virginia	9 May	Hunter Eggert	S&ID, NASA
Apollo aeroheating test	Palo Alto, California	9 May	Harthun Lundgren	S&ID, Ames
Coordination of Apollo jet effects tests	Hampton, Virginia	9 May	Crowder	S&ID, NASA
Presentation of revised parachute design subsystem	Houston, Texas	9, 10 May	Young Necker	S&ID, NASA
Pad abort and Little Joe II test	Houston, Texas	9, 10 May	Pyle Harvey	S&ID, NASA
Wind tunnel tests	Mountain View, California	9, 10 May	Gillies	S&ID, Ames
Reliability of spacecraft mission in relation to the navigation and guidance system	Houston, Texas	9 May	Walker	S&ID, NASA
NASA research and development clock for Apollo	Dallas, Texas	9 May	Wickstrom	S&ID, NASA
Optical viewing system discussion	Wilton, Connecticut	10 - 11 May	Marks	S&ID, NASA
Jet effect tests at Langley Center	Hampton, Virginia	10 May	Crowder	S&ID
Technical coordination and liaison, navigation and guidance system	Cambridge, Massachusetts	10 - 25 May	Martin	S&ID, NASA, MIT
Documentation coordination	Hartford, Connecticut Wilmington, Massachusetts Minneapolis, Minnesota Cedar Rapids, Iowa	10 - 15 May	Eggert	S&ID, NASA, Pratt & Whitney, AVCO Corp. Minneapolis-Honeywell Collins Radio
Simulation exercise studies and operations (Mercury)	Lompoc, California	10 - 15 May	Schepak Koos	S&ID, NASA
Fuel cell development	Hartford, Connecticut	10 May	Champaign	S&ID, Pratt & Whitney
Instrumentation systems coordination	Houston, Texas	11 - 27 May	Dunham Raver Barmore	S&ID, NASA
SAWE national convention	Seattle, Washington	12 - 18 May	Peters Dunn	S&ID, SAWE Symposium
EBW firing module	Norwick, New York	12 May	Champaign	S&ID, GLA
Panel meeting of Apollo electrical system integration	Houston, Texas	13 - 16 May	Triman White Dale Champaign	S&ID, NASA
Lunar-landing simulation study	Columbus, Ohio Houston, Texas	13 May	Oglevie	S&ID, NASA
Wind tunnel tests, aerodynamics coordination	Mountain View, California	13 - 18 May	Gielow	S&ID, Ames

CONFIDENTIAL

Table 2. Apollo Meetings, Second Quarter 1962 (Continued)

Subject	Location	Date	S&ID Representative	Organizations
Lunar-landing simulation study	Columbus, Ohio	14, 15 May	Drimgold Walli Pounds Wingo	S&ID
Flight technology technical panel design review	Houston, Texas	14, 15 May	Dudek Schall Bornemann	S&ID, NASA
Stabilization and control coordination review; displays and GSE	Minneapolis, Minnesota	14 - 17 May	Knobbe Lu Antletz Jensen Watson Rowe Fouts Field Fleck Stratton	S&ID, Minneapolis-Honeywell
EBW firing units, as applied to instrumentation battery system	Minneapolis, Minnesota	15 May	Johannes	S&ID, McCormick Selph Associates
Apollo wind tunnel coordination	Houston, Texas	15 - 16 May	Allen	S&ID, NASA
Apollo propulsion system briefing	Houston, Texas	15 - 17 May	Simkin	S&ID, NASA
Spacecraft coordination	Minneapolis, Minnesota	15 May	McNeary	S&ID, Minneapolis-Honeywell
Fuel system cell analysis	Houston, Texas	15 - 17 May	Barnett	S&ID, NASA
Propellant storage handling symposium	Cleveland, Ohio	15 - 17 May	Nelson	S&ID, Lewis Research
Life systems briefing	Houston, Texas	15 - 16 May	Wells	S&ID, NASA
Staging interface problems	Cleveland, Ohio	15 - 18 May	Hackett	S&ID, Lewis Research
Society for Experimental Stress Analysis presentation	Dallas, Texas	16 - 18 May	Goldstone	S&ID, Symposium
Navigation and guidance coordination	Cambridge, Massachusetts	15 - 18 May	Cramer Mayes Williamson Martin	S&ID, MIT
Apollo computer technical discussions	Cambridge, Massachusetts	16 - 18 May	Siev Steiner	S&ID, MIT
Mechanical systems meeting	Houston, Texas	16 - 17 May	Johnson Necker Stone	S&ID, NASA
Monthly coordination meeting	Minneapolis, Minnesota	16 - 17 May	Jensen Knobbe	S&ID, Minneapolis-Honeywell
National Aerospace instrumentation and telemetering conferences	Washington, D. C.	19 - 25 May	Zemenick Jones Dorrell Robinson	S&ID, Symposium
Data processing techniques relative to ascent guidance and navigation	Minneapolis, Minnesota	21 May	Jones	S&ID, Minneapolis-Honeywell
Umbilical tower operations conference	Huntsville, Alabama	21 May	White	S&ID, NASA

CONFIDENTIAL

[redacted]

Table 2. Apollo Meetings, Second Quarter 1962 (Continued)

Subject	Location	Date	S&ID Representative	Organizations
Electrical systems	Houston, Texas	21 May	Dallery Champaign	S&ID, NASA
Problems of supercritical gas storage systems	Seattle, Washington	21 May	Bouman	S&ID, Boeing Aircraft Company
Discussion of Apollo temporary facilities, material support at AMR	Cape Canaveral, Florida	21 - 23 May	Ford	S&ID, NASA
Requirements for technical information on Apollo	Langley Field, Virginia	21 May	Cook Lundgren	S&ID, NASA
Biweekly spacecraft systems	Houston, Texas	22 May	Neff Smith McIntyre	S&ID, NASA
Coordination of wind tunnel structural dynamics test	Columbus, Ohio Langley Field, Virginia	22 - 23 May	Pohlen	S&ID, NASA
Plan and training	Houston, Texas	22 - 23 May	Pollard Perry	S&ID, NASA
Management systems functions	Tulsa, Oklahoma	22 May	Hill	S&ID
Orientation briefing of navigation and guidance industrial contractor	Houston, Texas	21 - 24 May	Risley Campbell Todd Kennedy	S&ID, NASA, MIT, AC Spark Plug, Raytheon, Kollsman
Coordination of instrumentation requirements for SA-5 and SA-6	Houston, Texas	22 May	Eslinger	S&ID, NASA
Resident representation	Wilmington, Massachusetts	22 May	Lowery	S&ID, Avco
Training plan	Downey, California	22 May	Pollard	S&ID, Minneapolis-Honeywell
GOSS requirement	Houston, Texas	23 May	Kronsburg Schepak	S&ID, NASA
Design review	Houston, Texas	23 May	Antletz Lu Knobbe Miller	S&ID, NASA
Wind tunnel test program and models for Apollo LES jet effects	Hampton, Virginia	24 May	Crowder	S&ID, NASA
Mechanical design integration	Huntsville, Alabama	24 May	Grycel	S&ID, NASA
Pad abort and Little Joe II interface problems	Downey, California	25 May	Pearce Cooper White Gatewood Murphy	S&ID, NASA, Convair
Subcontractor management office coordination	Wilmington, Massachusetts	25 May	Kerr	S&ID, Avco
Coordination of project integration with NASA: R&D vehicles, design integration, interface areas	Houston, Texas	25 May	Charnock	S&ID, NASA
Biweekly flight technology system meeting	Houston, Texas	28 May	Jones	S&ID, NASA
Prequalifying drop test coordination	El Centro, California	28 May	Sanderman Young	S&ID

[redacted]

Table 2. Apollo Meetings, Second Quarter 1962 (Continued)

Subject	Location	Date	S&ID Representative	Organizations
Interface	Houston, Texas	29 May	Ryker	S&ID, NASA
Programming facilities	Houston, Texas	30 May - 2 June	Flynn	S&ID, NASA, Aerojet-General
Technical panel	Houston, Texas	31 May	Wroble	S&ID, NASA, Collins Radio
In-flight test system and GSE interface	Houston, Texas	30 - 31 May	Day Graham Russell Dale Shelly	S&ID, NASA
Coordination of Apollo propulsion systems test plans	Houston, Texas	31 May	Williams Simpkin Field	S&ID, NASA
Altitude testing of service module and reaction control of rocket	Tullahoma, Tennessee	31 May	Field	S&ID, NASA
JUNE				
Familiarization with the DSIF tracking station	Goldstone Dry Lake Tracking Station	1 June	Robinson Rousculp Shelley Green	S&ID, NASA
Coordination of Apollo propulsion systems test plans	Houston, Texas	1 June	Williams	S&ID, NASA
NASA briefing; Mercury and Gemini training	Cape Canaveral, Florida	3 June	Copping Perry Steisslinger Nave Blanchard	S&ID, NASA
Motion picture documentation	Mountain View, California	4 June	Eggert	S&ID, Ames Research Center
Photo-optical instumentation conference	Palo Alto, California	4 June	Dacus	S&ID, Photo-Optical Instrumentation
GSE development review and coordination	Cedar Rapids, Iowa	4 - 5 June	Wroble Meier Eckmeier	S&ID, Collins Radio
Mercury equipment review	Cape Canaveral, Florida	4 June	Matthews Smith Woff	S&ID, NASA
Biweekly technical panel meeting	Houston, Texas	4 June	Klemm	S&ID, NASA
Resident representation	Elkton, Maryland	4 - 8 June	Frankhouse	S&ID, Thiokol
Wind tunnel test and facilities	Tullahoma, Tennessee	5 June	Eggert	S&ID, Arnold Engineering Development Center
Logistics support plan	Downey, California	5 June	Comensky	S&ID, Aerojet-General Corp.
Data on weightlessness and visual problems in rendezvous	Dayton, Ohio	5 June	Roebuck	S&ID, Wright-Patterson AFB
Technical panel meeting	Houston, Texas Cedar Rapids, Iowa	5 June	Wroble	S&ID, NASA
Program management coordination	Dallas, Texas	6 - 7 June	Butler	S&ID, Collins Radio
Resident representative installation	Wilmington, Massachusetts Elkton, Maryland	6 - 8 June	Toomey	S&ID, AVCO, Thiokol

[redacted]

Table 2. Apollo Meetings, Second Quarter 1962 (Continued)

Subject	Location	Date	S&ID Representative	Organizations
MIT systems analysis	Cambridge, Massachusetts	6 - 7 June	Jones	S&ID, MIT
TV studies coordination	Eightstown, New Jersey Boston, Massachusetts	6 June	Green	S&ID, RCA, Raytheon
Solid propellant and technical steering committee meeting	Pittsburgh, Pennsylvania	5 - 6 June	Bellamy	S&ID, NASA
Design review and status of launch escape system tower jettison motor	Elkton, Maryland	7 June	Wolff Bergeron	S&ID, NASA, Thiokol
Life systems	Cambridge, Massachusetts	7 - 8 June	Blanchard Beam Martin Donaldson Allen Jones Todd	S&ID, NASA, MIT Minneapolis-Honeywell Dunlap
Apollo requirements for project fire	Langley Field, Virginia	7 June	Cook Lundgren	S&ID, Langley Research Center
Instrumentation and acceptance inspection for aerodynamics of the host transfer model (H-2)	Tullahoma, Tennessee	8 June	Biss	S&ID, NASA
Coordination	Minneapolis, Minnesota	9 - 12 June	Butler Stady	S&ID, Minneapolis-Honeywell
Flight technology panel	Houston, Texas	10 - 11 June	Cole Schall Dudek Dodds Wiltse	S&ID, NASA
Briefing of NASA on Apollo program status	Houston, Texas	11 June	Corvi Benner	S&ID, NASA
Spares provisioning coordination	Westchester, California	11 June	Ogren Comensky	S&ID, Airesearch
Conference on subject "Human Factors in Manual Space Flight"	Buffalo, New York	11 June	Rabideau	S&ID, Cornell Aeronautical Lab.
Biweekly coordination meeting	Houston, Texas	11 June	Wolff	S&ID, NASA
Requirements for 3600 access umbilical areas	Huntsville, Alabama	11 June	Robinson	S&ID, NASA
Analysis of instrumentation coordination system	Houston, Texas	11 June	Eslinger	S&ID, NASA
Quarterly progress report	Houston, Texas	11 - 14 June	Mundy Nelson Risley Ryker	S&ID, NASA
Heat transfer and fluid mechanics institute meeting	Seattle, Washington	12 June	Kinsler	S&ID, University of Washington
Second GSE checkout	Houston, Texas	12 June	Triman Gardner Donaldson	S&ID
Umbilical tower conference Saturn inertial system errors and guidance injection accuracy	Huntsville, Alabama	12 June	Grycel Cooper	S&ID, NASA
Temperature control coating development	Palo Alto, California	12 June	Barnett	S&ID, Ames Research Center
Wind tunnel testing	Tullahoma, Tennessee	12 June	Scharr	S&ID
Apollo motor tests	Houston, Texas Tullahoma, Tennessee	12 June 13 June	Bellamy Bellamy	S&ID; NASA; ARO, Inc.
S-IVB Apollo control interface problems discussion	Huntsville, Alabama	12 June	Peterson Meyers	S&ID

[redacted]

[redacted]

Table 2. Apollo Meetings, Second Quarter 1962 (Continued)

Subject	Location	Date	S&ID Representative	Organizations
GSE	Downey, California	12 - 13 June	Gregorek Morland. Beck Carter Harvey Louie Shelley Northcutt Todd	S&ID, NASA, MIT, AC Spark Plug, Raytheon
GSE, Booster and crew equipment interface	Houston, Texas	12 - 14 June	Hannon Zemenick Proctor Risley Gatewood Dewitt	S&ID, NASA
Heat transfer model (H-2) instrumentation and acceptance inspection for Aero-Dynamics	Tullahoma, Tennessee	12 June	Snowden	S&ID
Apollo facilities	Cape Canaveral, Florida	12 - 15 June	Munday	S&ID, NASA
Support and maintenance plan	Downey, California	13 June	Comensky	S&ID, Northrop-Ventura
Simulation and moving base equipment consultation	Dallas, Texas	13 June	Barnett	S&ID
Field analysis	Wilmington, Massachusetts	13 - 15 June	Butler Kerr	S&ID, Avco
Relationship of ECS and spacesuit to thermal balance of human being	Houston, Texas	13 - 14 June	Brockman Tarr Stoll	S&ID, NASA
Consultation on simulation and moving base equipment	Dallas, Texas	13 June	Porter	S&ID
Mechanical systems	Houston, Texas	13 June	Necker Dupaguier Jones, Jr. Johnson	S&ID, NASA
Flight technology system	Houston, Texas	14 June	Lundgren	S&ID, NASA
Grounding isolation methods	Minneapolis, Minnesota	14 - 20 June	Jensen	S&ID, Minneapolis-Honeywell
R&D coordination	Houston, Texas	15 June	Wroble	S&ID, NASA
Photo-optical instrumentation Conference	San Francisco, California	15 - 18 June	Dacus Pope	S&ID, Symposium
Coordination to support GSE test	Cape Canaveral, Florida	18 June	Eckmeier	S&ID, NASA
Apollo simulation program plan	Baltimore, Maryland Long Island, New York	18 June	Walli Robertson	S&ID, NASA
R&D instrumentation systems for early Apollo spacecraft	Houston, Texas	18 June	Barmore	S&ID, NASA
Aerospace transportation conference	Denver, Colorado	18 June	Nelson	S&ID
R&D instrumentation requirements	Houston, Texas Cambridge, Massachusetts	18 - 20 June	Cooper Ackermann	S&ID, NASA, MIT
Displays and controls	Downey, California	18 - 19 June	Beck Mayes Todd Latino Gilio Morris Fleck	S&ID, NASA, MIT Minneapolis-Honeywell
Logistics support activities and material coordination	Cocoa Beach, Florida	18 - 23 June	Rosenberg Slemmer Corbin	S&ID, NASA

[redacted]

[redacted]

Table 2. Apollo Meetings, Second Quarter 1962 (Continued)

Subject	Location	Date	S&ID Representative	Organizations
Apollo launch operations panel	Cape Canaveral, Florida	19 - 22 June	Carter Gore Sussman White	S&ID, NASA
Wind tunnel pretest conference	Tullahoma, Tennessee	19 June	Gillies Davey	S&ID, NASA
SCS back-up attitude reference system	Minneapolis, Minnesota	19 June	Knobbe	S&ID, NASA
GOSS monthly coordination meeting	Houston, Texas	19 June	Kronsberg	S&ID, NASA
Bioinstrumentation, microbiology, food, water, and waste	Houston, Texas	19 June	Steinnets Hair	S&ID, NASA
IAS convention	Los Angeles, California	19 - 21 June	Metsker Peck	S&ID, Symposium
Telemetering ground station requirements	Cape Canaveral, Florida	20 - 22 June	Zemenick Triman	S&ID
Briefing of MSC on Apollo entry guidance	Houston, Texas	20 June	Graham Knobbe Timothy Yee	S&ID, NASA
Electrical power distribution criteria	Cocoa Beach, Florida	20 June	Triman Rigas	S&ID, NASA
MIT simulation	Cambridge, Massachusetts	21 June	Steiner Furlong	S&ID, MIT, Minneapolis-Honeywell
Apollo-Saturn buffet model program	Moffett Field, California	21 June	Gildea Canetti	S&ID
Electrical systems	Houston, Texas	21 June	Dallery Champaign	S&ID, NASA
Wind tunnel tests	Mountain View, California	21 June	Crowder	S&ID, Ames
Isolation study and biweekly coordination	Houston, Texas	22 June	Smith	S&ID, NASA
Support tests at AEDC	Tullahoma, Tennessee	22 June	Sola	S&ID, NASA
Flight technology system biweekly meeting	Houston, Texas	25 - 26 June	Gershun Laubach Stelzride	S&ID, NASA
Fuel cell system	Houston, Texas	25 June	Nash	S&ID, NASA
Critical crew performance problems discussion	Stanford, Connecticut Boston, Massachusetts	25 June	Truax	S&ID, MIT
Support and maintenance data	Downey, California	25 June	Comensky	S&ID, Collins Radio
WSMR usage negotiations	White Sands, New Mexico	25 - 28 June	Proctor Kennedy	S&ID, NASA
GSE checkout and handling panel meeting	Houston, Texas	26 June	Triman Asbury Gardner	S&ID, NASA
Apollo project coordination	Hartford, Connecticut	26 June	Rosenberg	S&ID, Pratt and Whitney
Mechanical systems biweekly meeting	Houston, Texas	27 - 28 June	Johnson Mayes Necker	S&ID, NASA
Integration coordination (R & D vehicles)	Houston, Texas	28 June	Garre	S&ID, NASA
Visual simulation technique of the Apollo mission	Houston, Texas	29 June	Neff	S&ID, NASA
Apollo research coordination (test and simulation program)	Mountain View, California	29 June	Donaldson Easton	S&ID, Ames
IRE symposium: radio frequencies	San Francisco, California	28 - 29 June	Johnson	S&ID, IRE

[redacted]

II MILESTONE SUMMARY

APOLLO PROGRAM SCHEDULE STATUS

Table 3 lists important events and dates developed from major schedule exercises that have taken place since the proposal was submitted in October 1961. The first and second columns of Table 3 contain the proposal schedule and subsequent changes negotiated at Williamsburg. The third column indicates the schedule changes which were introduced by the Little Joe II Booster Adaptability study. The fourth column records the dates that were established for the Preliminary Apollo Program Plan (SID 62-223) dated 1 March 1962. On 26 and 27 March 1962, representatives of NASA and S&ID met at Downey to discuss program test objectives and schedules. Although no definite conclusions were reached at this meeting, it was indicated that the Master Phasing Plan would need revising to reflect some hardware deletions and minor rescheduling. Another meeting was held at Downey on 2 April 1962 to discuss and resolve test objectives and schedule requirements. Key dates discussed at the 26-27 March and 2-3 April meetings are shown in the last two columns of Table 3.

Revisions to the Master Phasing Plan and to associated detail schedules were in the process of being made at the close of the second quarterly report period. These revisions will be incorporated into the Program Plan which will be submitted to NASA on 31 July 1962; prior to this date, a separate document containing revised schedule data will be submitted.

Until these documents have been submitted, the Master Phasing Plan and the associated General Order Milestone Completion Schedules contained in the Preliminary Apollo Program Plan (SID 62-223) constitute the official S&ID basis for milestone-completion reporting. Table 4 lists all milestones that were scheduled for completion during the second quarter of 1962.

Table 3. Apollo Program Schedule Comparison

Milestone	Proposal	Williams-burg	Little Joe II	Program Plan	NASA-S&ID (3-27)	NASA-S&ID (4-2)
Engineering						
Structure release - boilerplates	5-1-62	7-1-62	7-1-62	7-1-62	8-1-62	8-1-62
Structure release - spacecraft	9-1-62	11-1-62	11-1-62	11-1-62	1-1-63	1-1-63
Design release - 100 percent	1-15-63	1-1-63	3-1-63	3-1-63	5-1-63	5-1-63
Manufacturing Completions						
Dynamic test article - boilerplate 9	7-1-63	10-1-62	10-1-62	9-15-62	10-15-62	9-15-62
First flyable boilerplate 12	2-1-63	9-1-62	12-1-62	11-15-62	12-15-62	12-15-62
First Saturn boilerplate 13	4-1-63	1-1-63	1-15-63	1-15-63	2-15-63	3-1-63
First completed spacecraft - 007	6-1-63	2-15-63	5-1-63	5-1-63	10-1-63	9-1-63
First manned spacecraft - 011	9-1-63	11-15-63	11-15-63	11-15-63	12-1-63	2-1-64
Systems Test						
First launch - boilerplate 12	7-1-63	1-15-63	3-1-63	3-1-63	5-1-63	5-1-63
First Saturn launch - boilerplate 13	7-1-63	7-1-63	7-1-63	6-15-63	6-15-63	6-15-63
First earth orbital launch - 007	11-1-63	2-15-64	2-15-64	2-15-64	9-15-64	9-15-64
First manned launch - 011	5-1-64	5-1-64	7-1-64	6-15-64	9-15-64	9-15-64

Table 4. Milestone Status Report

General Order	Milestone Title 2nd Quarter 1962	Scheduled Completion Date	Recorded Completion Date	Rescheduled Completion Date
7121	Recovery SSS initiated	5-1-62	5-1-62	
7121	Preliminary aero data and loads report	4-1-62	4-1-62	
7121	Preliminary jet effects analysis complete	5-1-62	5-1-62	
7121	Drogue chute analysis complete	6-15-62	6-15-62	
7121	Service module response and maneuver requirements established	6-15-62	6-15-62	
7121	Fuel cell test requirements complete	4-1-62	4-1-62	
7121	Preliminary water management system analysis complete	4-1-62	4-1-62	
7121	Preliminary radiation dosage table complete	5-1-62	5-1-62	
7121	Propulsion servicing equipment preliminary analysis complete	6-1-62	6-1-62	
7121	First controls and displays breadboards complete	6-1-62	7-6-62	7-1-62
7122	Preliminary mission study reports complete	5-1-62	5-1-62	
7122	Maintenance plan information release to Logistics	5-1-62	5-1-62	
7122	Second issue technical development plan	6-15-62	6-15-62	
7123	First quarterly report	4-1-62	4-1-62	
7123	First reliability program review	4-1-62	4-1-62	
7123	First NASA qual-reliability review	5-1-62	5-1-62	
7124	Initiate installation design B/P 6	4-1-62	4-1-62	
7124	Receive final instrumentation requirements list B/P 6 (from Project Integration)	6-1-62	6-1-62	
7124	Initiate installation design B/P 12	6-1-62	6-1-62	
7124	Receive final instrumentation requirements list B/P 12 (from Project Integration)	6-1-62	6-1-62	
7124	Release approved instrumentation equipment list B/P 6	6-15-62	6-15-62	
7125	Start procurement specifications	4-1-62	4-1-62	
7125	Start preparation of trainer test outline - part task trainers	4-1-62	4-1-62	
7125	Complete performance specifications trainers (20)	5-1-62	5-1-62	
7126	Complete quarterly revision to general test plan	6-15-62	6-15-62	
7128	Initial quarterly report	4-1-62	4-1-62	
7128	Initial reliability status report	4-1-62	4-1-62	
7128	Initial drawing list	4-1-62	4-1-62	
7128	Initial spacecraft subsystem specifications	5-1-62	5-1-62	
7128	Initial flight and crew performance specifications	5-1-62	5-1-62	
7128	Initial spacecraft system monitor personnel performance specifications	5-1-62	5-1-62	
7128	Initial training equipment specification	5-1-62	5-1-62	
7128	Initial spacecraft familiarization manual	5-1-62	5-1-62	
7128	Initial maintenance plan	5-1-62	5-1-62	
7128	Initial end-item test plan	6-1-62	6-1-62	
7130	B/P 6 control system requirements defined	5-1-62	5-1-62	
7130	B/P 16 control system requirements defined	5-15-62	5-15-62	
7130	B/P launch escape system performance specification released	6-1-62	6-1-62	
7130	SCS equipment requirements established	6-1-62	6-1-62	
7131	Preliminary space suit interface requirements established	4-15-62	4-15-62	
7131	Initial crew subsystem specification submitted	5-1-62	5-1-62	
7131	Initial flight crew performance specification submitted	5-1-62	5-1-62	
7131	Initial monitoring personnel performance specification submitted	5-1-62	5-1-62	
7131	Cabin interior and crew station arrangement preliminary design complete	6-1-62	6-1-62	
7131	Flight controls and displays preliminary layout complete	6-1-62	6-1-62	
7131	Cabin interior lighting and color preliminary specification complete	6-15-62	6-15-62	
7131	Life systems design criteria established	6-15-62	6-15-62	
7132	Preliminary weight and balance complete	4-1-62	4-1-62	
7132	Basic master lines established	4-1-62	4-15-62	
7132	Contract awarded - tower jettison motor	3-15-62	4-14-52	4-15-62
7132	Systems performance specification submitted	5-15-62	5-15-62	
7132	100% escape tower structure design release	6-1-62	6-1-62	
7133	Specification release - super critical gas storage system	5-1-62	5-1-62	
7133	ECS performance specification submitted	5-1-62	5-1-62	
7133	ECS test program (breadboard) - start	6-1-62	6-1-62	
7133	Complete drawing release mock-up - ECS	6-15-62	6-15-62	
7133	Select supplier super critical gas storage system	6-15-62	6-15-62	
7134	Parachute subsystem performance specifications submitted	5-1-62	5-1-62	
7135	Antenna equipment B/P 12 procurement specifications released	4-15-62	4-15-62	
7135	Communications performance and interface specifications	5-1-62	5-1-62	
7135	Service module antenna subsystem B/P 13 procurement specifications released	6-29-62	6-22-62	
7135	Command module antenna subsystem and radome AFRM 007 procurement specifications released	6-29-62	6-22-62	
7136	Guidance and navigation performance specification submitted	6-29-62	6-21-62	
7137	Preliminary weight and balance complete	4-1-62	4-1-62	
7137	Basic master lines established	4-1-62	4-1-62	
7137	Preliminary vehicle design complete	5-1-62	5-1-62	
7137	Preliminary mock-up inspection	6-15-62	6-15-62	
7138	Award rocket engine contract - service propulsion system	4-1-62	4-1-62	
7138	Start PFRT (IDWA) design (propellant)	4-1-62	4-1-62	
7138	Engineering release for preliminary mock-up - service propulsion system	5-15-62	5-15-62	
7138	Performance specification submitted	5-15-62	5-15-62	
7138	Complete mock-up design (propellant)	6-15-62	6-15-62	
7139	Service module design complete (7)	5-15-62	5-15-62	
7139	Preliminary vehicle design complete	5-15-62	5-15-62	
7140	Preliminary system analysis complete	4-1-62	4-1-62	
7140	Start inter-system wiring test program	4-1-62	4-1-62	
7140	Start design of lighting system	4-15-62	4-15-62	
7140	Start battery procurement	5-1-62	5-1-62	
7140	Start inverter procurement	5-1-62	5-1-62	
7140	Performance specification submittal	5-15-62	5-16-62	
7140	Complete component selection	6-15-62		9-14-62
7141	C/M and S/M performance specifications submitted	5-1-62	5-1-62	
7141	Engineering release for preliminary mock-up - C/M RCS	5-15-62	5-15-62	
7141	Start breadboard design C/M RCS (propellant)	5-15-62	5-15-62	
7141	Start breadboard design service module RCS (propellant)	6-15-62	6-15-62	
7141	Complete mock-up design	6-15-62	6-15-62	
7142	Preliminary weight and balance complete	4-1-62	4-1-62	
7142	Basic master lines established	4-15-62	4-15-62	
7142	Start spacecraft adapter detail drawings	5-1-62	5-1-62	
7142	Preliminary vehicle design complete	5-1-62	5-1-62	
7143	B/P 19 - 100% release - engineering drawing and procurement specifications	4-15-62	6-1-62	6-1-62
7145	GOSS equipment performance and interface specifications due NASA	5-1-62	5-1-62	

[redacted]

III ANALYSIS DATA

FLIGHT TECHNOLOGY

APOLLO WIND TUNNEL PROGRAM

The current status of the wind tunnel program and planned activities for the next quarter are summarized in Figure 1 (Sheets 1 through 4). The scale of models currently in work and the degree of completion of design and fabrication are indicated. Also shown are the objectives and status of the test and related reports.

ENTRY FLIGHT SYSTEM

Static Stability

Model design and construction have been completed for the first hypervelocity force models of the entry configuration. The models were built by application of the light-weight construction techniques required for the short run time (10 to 30 milliseconds) of impulse tunnels.

The 0.04-scale FS-4 model is designed for testing in the arc-driven Arnold Engineering Development Center-Von Karman Facility (AEDC-VKF) hotshot-II tunnel (M=20) using a conventional strain-gage balance. The larger 0.05-scale FS-8 model is designed for testing in the helium-driven Cornell Aeronautical Laboratory (CAL) 48-inch shock tunnel (M=16), employing a balance having piezo-electrical crystal gages.

Hypervelocity data from two sources having different model scales, instrumentation, and tunnel conditions will improve accuracy in determining the aerodynamic characteristics in a velocity region where accurate simulation is difficult.

Pressure Distribution

An 0.02-scale static pressure model (PS-1) was tested in the Jet Propulsion Laboratory (JPL) hypersonic tunnel in the Mach number range of 5 to 9. The number of instrumentation points was limited by model size, but the data were sufficient for early pressure distribution studies. Larger models with more instrumentation are under construction for tests to be conducted during the next quarter in the Mach number range of 1.5 to 10.

The first hypervelocity static pressure tests of the 0.04-scale model PS-4 were completed in the AEDC-VKF Hotshot-II tunnel at Mach number

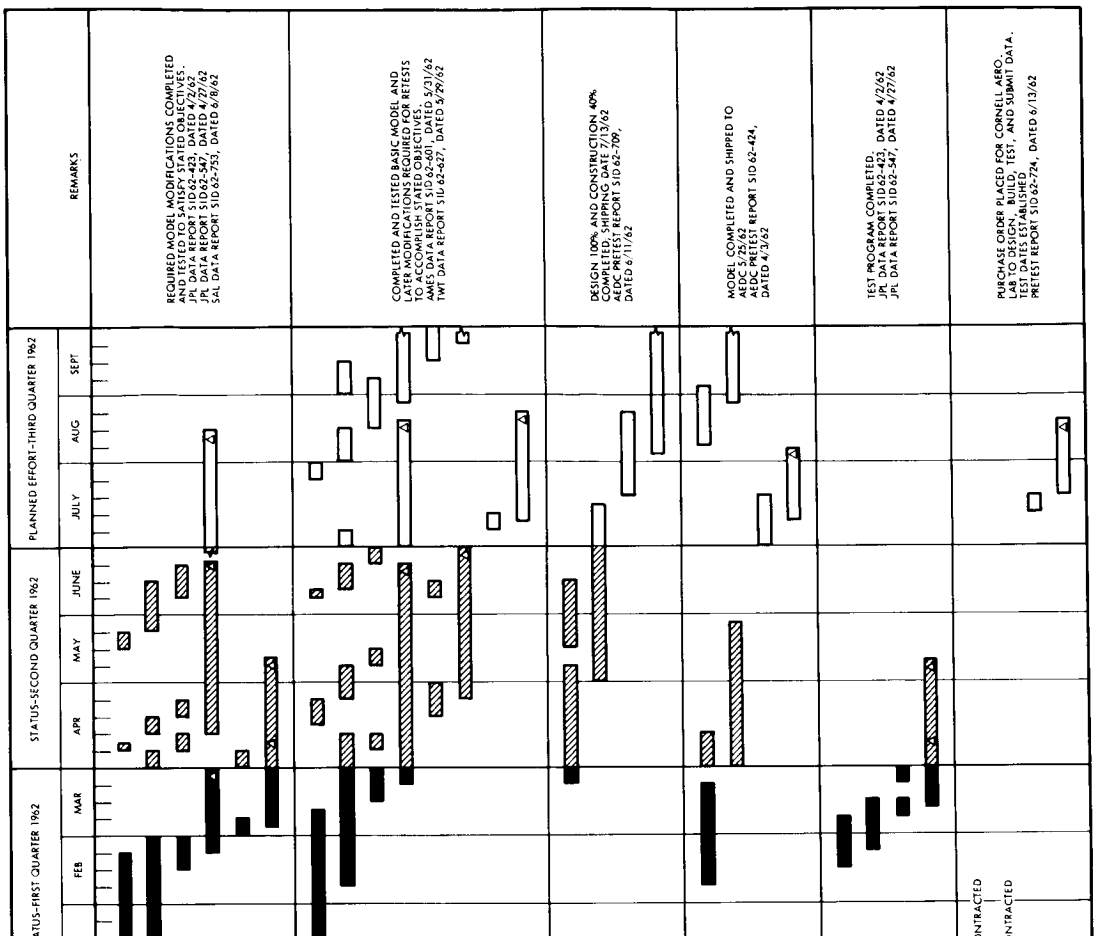

Figure 1. Apollo Wind Tunnel Program—Status Summary (Sheet 1 of 4)

(△ TABULATED DATA REPORT)

MODEL	OBJECTIVES	EFFORT	STATUS-FIRST QUARTER 1962 JAN	FEB	MAR	STATUS-SECOND QUARTER 1962 APR	MAY	JUNE	PLANNED EFFORT-THIRD QUARTER 1962 JULY	AUG	SEPT	REMARKS
FSJ-1 0.085 SCALE	DETERMINE DETAILED EFFECTS OF TRUE SIMULATION OF ESCAPE MOTOR JET EXHAUST IMPINGEMENT ON COMMAND MODULE FORCE AND PRESSURE DATA BY EMPLOYING H_2O_2 AS PROPELLANT. MACH NUMBER RANGE - TRANSONIC	MODEL DESIGN MODEL CONSTR TEST - LRC DATA REDUCTION TEST - TWT DATA REDUCTION										EVALUATION OF CATALYST PACK DESIGN AND MOTOR SIMULATION CAPABILITY. MODEL DESIGN 50% COMPLETE, CONSTRUCTION 5% COMPLETE. CONCEPT APPROVED BY LRC 16-FT TRANS W T STAFF. PRETEST REPORT IN WRITING.
FSL-1 0.020 SCALE	DETERMINE AERODYNAMIC FORCE DATA ON THE COMPLETE APOLLO-SATURN LAUNCH CONFIGURATION AND ON SEVERAL LAUNCH ABORT CONFIGURATIONS FOR USE IN MISS-DISTANCE CALCULATIONS. MACH NUMBER RANGE 0.20 to 10.0	MODEL DESIGN MODEL CONSTR TEST - AMES DATA REDUCTION TEST - AEDC DATA REDUCTION TEST - TWT DATA REDUCTION TEST - NACAL DATA REDUCTION										PROGRAM AGREEMENT REACHED WITH ALL SCHEDULED TEST FACILITIES. MODEL DESIGN 80% COMPLETE, CONSTRUCTION 40% COMPLETE. PRETEST REPORT FOR AMES TEST IN WRITING.
FD-1 0.030 SCALE	DYNAMIC STABILITY DATA ON THE COMMAND MODULE IN THE ENTRY ATTITUDE ABOUT SYMMETRIC AND ASYMMETRIC C-G LOCATIONS BY USE OF THE DECAYING OSCILLATION TEST TECHNIQUE. MACH NUMBER RANGE 3.26 TO 9.0	MODEL DESIGN MODEL CONSTR TEST - JPL DATA REDUCTION										MODEL COMPLETED AND DELIVERED TO JPL FOR DYNAMIC BALANCING ON THE AIR BEARING AND OPTICAL ALIGNMENT OF THE FREQUENCY READOUT DEVICE. PRETEST REPORT SID 62-549, DATED 4/24/62
FD-2 0.055 SCALE	DYNAMIC STABILITY DATA ON THE COMMAND MODULE AND LES CONFIGURATIONS BY USE OF THE FORCED OSCILLATION TEST TECHNIQUE. MACH RANGE TRANSONIC AND 1.5 TO 4.6	MODEL DESIGN MODEL CONSTR TEST - LRC DATA REDUCTION										FIRST SCHEDULED TEST COMPLETED - FOLLOWED BY REWORK OF MODEL TO PROVIDE 120-IN. TOWER CONFIGURATION FOR MAY 28 TEST. LRC DATA REPORT SID 62-536, DATED 5/28/62
FD-3 0.045 SCALE	BACKUP TEST FOR CORRELATION WITH FD-1 AND FD-2 WILL USE BOTH THE FORCED AND DECAYING OSCILLATION TEST TECHNIQUES AT THE SAME SCALE AND IN THE SAME TEST FACILITIES. MACH NUMBER RANGE 3.5 TO 10.0	MODEL DESIGN MODEL CONSTR TEST - AEDC DATA REDUCTION										EFFORT PLANNED TO START IN JULY - TEST SCHEDULED TO START IN OCTOBER.
SD-1 0.080 SCALE	INVESTIGATE PROBLEMS ASSOCIATED WITH BUFFETING ON THE SA-5 LAUNCH CONFIGURATION. TRANSIENT PRESSURE DATA ON AN ELASTIC MODEL, MOUNTED ON A SYSTEM OF SOFT SPRINGS AND SUBJECTED TO FORCED MODEL EXCITATION. MACH NUMBER RANGE 0.5 TO 1.2 (TRANSONIC)	MODEL DESIGN MODEL CONSTR MODEL CALIBRATION TEST - LRC DATA REDUCTION										MODEL DESIGN 90% COMPLETE, CONSTR. 65% COMPLETE. CALIBRATION EQUIPMENT IN WORK. PRETEST REPORT IN WRITING. STRUCTURAL ANALYSIS IN WORK. ALTERNATE PAYLOAD (JUPITER NOSE CONE) STARTED.

Figure 1. Apollo Wind Tunnel Program—Status Summary (Sheet 2 of 4)

(△ TABULATED DATE REPORT)

MODEL	OBJECTIVES	EFFORT	STATUS-FIRST QUARTER 19 JAN	FEB	MAR	STATUS-SECOND QUARTER 1962 APR	MAY	JUNE	PLANNED EFFORT-THIRD QUARTER 1962 JULY	AUG	SEPT	REMARKS
PS-1 0.020 SCALE	PRESSURE DISTRIBUTIONS ON THE COMMAND MODULE IN THE ENTRY AND LAUNCH ESCAPE ATTITUDES BY USE OF SIMPLIFIED MODELS FOR EARLY LOADS DATA MACH NUMBER RANGE 1.5 TO 9.0	MODEL DESIGN MODEL CONSTR TEST - JPL DATA REDUCTION										TEST PROGRAM COMPLETED JPL DATA REPORT SID62-486, DATED 4/11/62 JPL DATA REPORT SID62-548, DATED 5/29/62
PS-3 0.045 SCALE	PRESSURE DISTRIBUTIONS ON THE ENTRY AND HYPERSONIC ABORT CONFIGURATIONS THROUGH USE OF A LARGER MODEL PERMITTING MORE DETAILED INSTRUMENTATION THAN PS-1 MACH NUMBER RANGE 5.7 TO 10.0	MODEL DESIGN MODEL CONSTR TEST - AEDC DATA REDUCTION										CHANGED TEST FACILITY (WAS AMES); MODEL REDESIGNED ACCORDINGLY AND PURCHASE ORDER PLACED FOR VENDOR CONSTRUCTION. SHIPPING DATE TO AEDC 7/14/62 PRETEST REPORT SID 62-752, DATED 6/1/62
PS-4 0.040 SCALE	PRESSURE DISTRIBUTIONS AT HYPERVELOCITIES ON THE ENTRY AND HYPERSONIC ABORT CONFIGURATIONS MACH NUMBER REGION ≈ 15.0	MODEL DESIGN MODEL CONSTR TEST - AEDC DATA REDUCTION										MODEL COMPLETED AND SHIPPED TO AEDC 5/30/62. PRETEST REPORT SID62-538, DATED 4/19/62 TEST COMPLETED, DATA REPT IN WORK
PS-5 0.050 SCALE	OBJECTIVES SAME AS FOR PS-4. BACKUP TEST USING DIFFERENT TYPE OF IMPULSE TUNNEL AND TEST TECHNIQUES FOR CORRELATION. MACH NUMBER REGION ≈ 15.5	MODEL DESIGN MODEL CONSTR TEST - CAL DATA REDUCTION	SUBCONTRACTED SUBCONTRACTED									PURCHASE ORDER PLACED WITH CORNELL AERO LAB TO DESIGN, BUILD, TEST, AND SUBMIT DATA - TEST DATES ESTABLISHED. PRETEST REPORT IN WRITING
PST-1 0.105 SCALE	STEADY STATE AND TRANSIENT PRESSURE DATA ON THE COMMAND MODULE AND LAUNCH ESCAPE SYSTEM MACH NUMBER RANGE 0.5 TO 3.5	MODEL DESIGN MODEL CONSTR TEST - TWT DATA REDUCTION TEST - LEWIS DATA REDUCTION										NO EFFORT DURING THE SECOND QUARTER RESCHEDULED TO THE FOURTH QUARTER, PENDING COMPLETION OF HIGHER PRIORITY ITEMS AND PRESSURE DATA TO BE OBTAINED FROM FSJ-1 MODEL TESTS.
PSTL-1 0.055 SCALE	DETERMINATION OF STEADY STATE AND TRANSIENT PRESSURE MEASUREMENTS ON APOLLO-SATURN C-1 LAUNCH CONFIGURATION. CORRELATION WITH SD-1 MODEL DATE REGARDING FLUCTUATING FLOW AND BUFFETING PROBLEMS. MACH NUMBER RANGE 0.7 TO 3.5	MODEL DESIGN MODEL CONSTR TEST - TWT DATA REDUCTION TEST - AMES DATA REDUCTION										MODEL CONSTRUCTION AND FIRST TEST IN TWT COMPLETED. TWT PRETEST REPORT SID 62-745, DATED 6/11/62 AMES PRETEST REPORT IN WRITING. SPECIAL INSTRUMENTATION FOR AMES TEST TO BE INSTALLED DURING JULY.

Figure 1. Apollo Wind Tunnel Program—Status Summary (Sheet 3 of 4)

(△ TABULATED DATA REPORT)

MODEL	OBJECTIVES	EFFORT	STATUS-FIRST QUARTER 1962 JAN	FEB	MAR	STATUS-SECOND QUARTER 1962 APR	MAY	JUNE	PLANNED EFFORT-THIRD QUARTER 1962 JULY	AUG	SEPT	REMARKS
H-1 0.020 SCALE	DETERMINATION OF HEAT TRANSFER RATES FOR ENTRY CONFIGURATION, LAUNCH ESCAPE SYSTEM, AND HYPERSONIC ABORT. MACH NUMBER RANGE 6.0 TO 9.0	MODEL DESIGN MODEL CONSTR TEST - JPL DATA REDUCTION										TEST PROGRAM COMPLETED. JPL DATA REPORT SID 62-628, DATED 6/4/62
H-2 0.045 SCALE	OBJECTIVES SIMILAR TO THOSE OF H-1 TESTS BY USE OF A LARGER MODEL THAT PERMITS MORE DETAILED INSTRUMENTATION, BETTER REYNOLDS NUMBER SIMULATION, AND ADDITION OF THE SERVICE MODULE MACH NUMBER RANGE 3.6 TO 10.0	MODEL DESIGN MODEL CONSTR TEST - AEDC DATA REDUCTION TEST - LRC DATA REDUCTION										MODEL SHIPPED TO AEDC AND FIRST TEST COMPLETED. DATA REDUCTION STARTED. AEDC PRETEST REPORT SID 62-614, DATE 5/9/62 LRC PRETEST REPORT IN WRITING. INSTRUMENTED TOWER FOR LRC TEST IN WORK.
H-4 0.050 SCALE	DETERMINATION OF HEAT TRANSFER RATES FOR ENTRY CONFIGURATION AT HYPERVELOCITIES MACH NUMBER REGION ≈ 15.5	MODEL DESIGN MODEL CONSTR TEST - CAL DATA REDUCTION	SUBCONTRACTED SUBCONTRACTED									PURCHASE ORDER PLACED WITH CORNELL AERONAUTICAL LABORATORY TO DESIGN, BUILD, TEST, AND SUBMIT DATA REPORT. TEST DATES ESTABLISHED.
HL-1 0.045 SCALE	DETERMINATION OF HEAT TRANSFER RATES FOR THE APOLLO-SATURN C-1 LAUNCH CONFIGURATION MACH NUMBER RANGE 3.6 TO 10.0	MODEL DESIGN MODEL CONSTR TEST - LRC DATA REDUCTION TEST - AEDC DATA REDUCTION										EFFORT PLANNED TO START IN JULY - FIRST TEST SCHEDULED FOR OCTOBER.

Figure 1. Apollo Wind Tunnel Program—Status Summary (Sheet 4 of 4)

20. The pressure-distribution data will be correlated with a similar test to be conducted in August at the CAL shock tunnel.

HEAT TRANSFER

The first heat transfer data were obtained from the 0.02-scale H-1 tests at the JPL hypersonic tunnel at Mach number range from 5 to 9. The early data were supplemented by the more refined 0.045-scale H-2 tests at the AEDC-VKF B and C tunnels at Mach numbers 8 and 10. Entry Reynolds numbers were matched, and an increased number of instrumentation points were possible with the larger model. Both models were of thin-skin construction with thermocouples welded to the inner skin.

BOOST FLIGHT SYSTEM

Construction is nearing completion on the 0.08-scale SD-1 elastic, dynamically scaled model designed for testing in the Langley 16-foot transonic dynamics tunnel. The spring-suspended model is instrumented to obtain response characteristics, aerodynamic damping, and transient pressure data for the C-1 configuration in the Mach number range of 0.6 to 1.2.

Transient pressure tests at Mach number range of 0.7 to 3.5 have been completed on the 0.055-scale PSTL-1 model in the NAA trisonic tunnel. The PSTL-1 model simulates the upper portion of the C-1 vehicle, from the midpoint at the S-1 stage, and is equipped with a detachable escape tower and motor. This model is instrumented with 19 high-frequency transducers for recording aerodynamic noise and buffeting pressures in the 0-20 kc range. The model also has provisions for measuring 89 static pressures. The installation is shown in Figure 2.

Design and construction has been initiated on the 0.02-scale FSL-1 model of the entire C-1 vehicle. This model will be used to obtain aerodynamic data for launch and abort miss-distance calculations.

The first hypersonic heat transfer data were obtained with the 0.02-scale H-1 model in the JPL hypersonic tunnel in the Mach number range of 5 to 9. The H-1 model simulated the command module/service module/launch escape system configuration.

More accurate and detailed heat transfer data were obtained (at Mach numbers 8 and 10) at the AEDC-VKF B and C tunnels, with the 0.045-scale H-2 model of the command module/service module/LES configuration. The H-2 model is shown in Figure 3.

CONFIDENTIAL

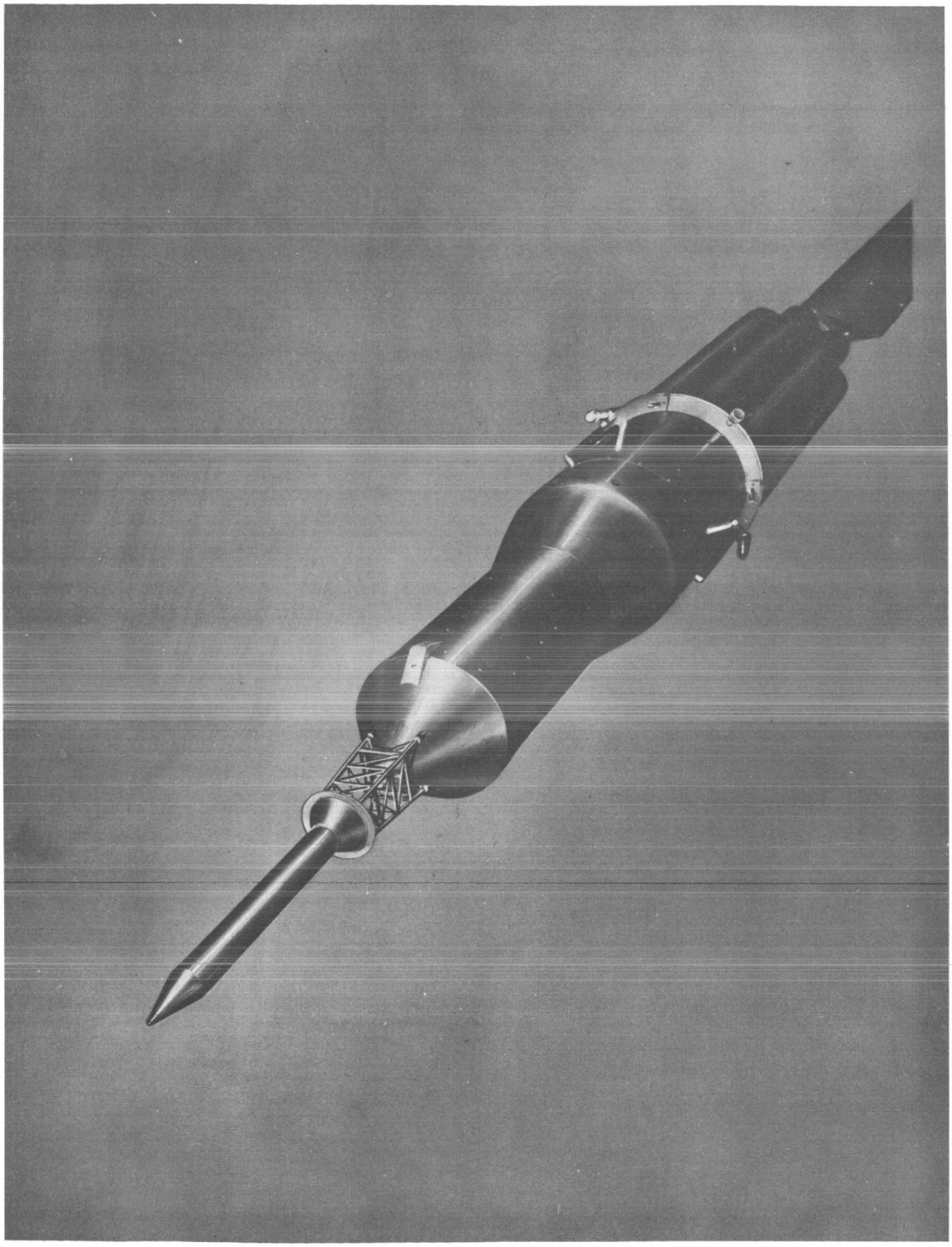

Figure 2. The 0.055-Scale Transient Pressure Model PSTL-1, Installed in NAA Trisonic Wind Tunnel

CONFIDENTIAL

CONFIDENTIAL

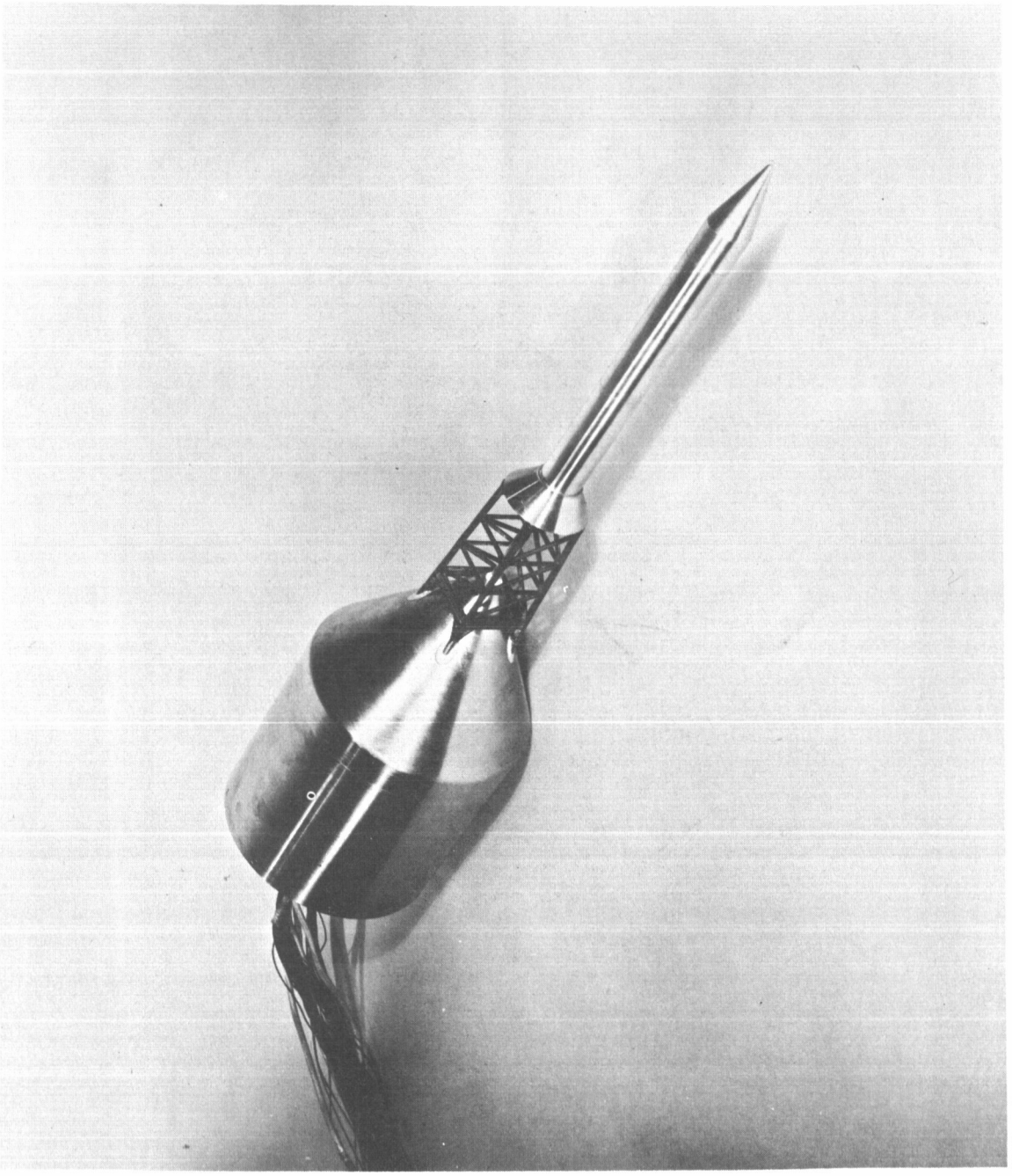

Figure 3. The 0.045-Scale Heat Transfer Model of the S/M + C/M + LES Configuration

CONFIDENTIAL

LAUNCH ESCAPE SYSTEM (LES)

A summary of the static stability tests conducted on the launch escape system is shown in Figure 4. Included are the LES tests in the NAA trisonic tunnel, at a Mach number range of 0.7 to 3.5 and a Reynolds number range of 12.5 to 13.5 million, based on the command module diameter. A typical installation is shown in Figure 5.

Dynamic stability testing of the 0.555-scale FD-2 model was completed in the Langley 8-foot transonic pressure tunnel, the Mach number range being 0.3 to 1.2. The FD-2 was reworked to update the LES, and tests were completed in the low Mach number section of the Langley unitary plan wind tunnel at a Mach number range of 1.6 to 2.75.

The JPL hypersonic tests were completed on the LES configuration of the FS-1 model. This test employed a 0.02-scale model to obtain high Mach number pressure data at an early date.

An investigation has been conducted in the NAA Supersonics Aerophysics Laboratory (SAL) tunnel to determine the interference effects of motor plumes using the 0.02-scale FS-1 model. Solid plumes were used to simulate jet-exhaust boundaries. Plumes of varying sizes were used for altitude simulations up to 36,000 feet and curvatures for free-stream effects. They were tested over the Mach number range of 0.70 to 3.27. Figure 6 shows the installation of the model with plumes.

The preliminary design was completed and detail design initiated on the jet effects FSJ-1 model. The jet effects test will be conducted at the Langley 16-foot transonic tunnel using a hydrogen-peroxide motor for simulation. This 0.085-scale model will have a maximum thrust of 2400 pounds using the peroxide supply system currently being installed at Langley. The motor design uses a single, tapered catalyst pack of 40 by 40 wires per inch mesh silver screen and is fed by a self-contained supply manifold. The propellant is fed to the motors through the tower legs. Interference of the supply system on force measurements will be minimized by use of contraspiralled coils. Pressure orifices will be installed on the command module to define the jet-on and jet-off distributions.

WIND TUNNEL TEST PROGRAM

The wind tunnel tests have been performed on a thin-skin heat transfer model at the JPL. Table 5 summarizes the test conditions. The test was planned to attain the following objectives.

SKIRT SIZE

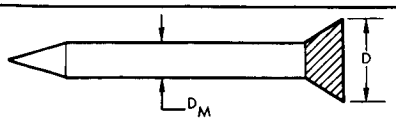

MACH NO.	SKIRT-MOTOR DIAMETER RATIO, D/D_M					
	1.8	2.0	2.5	3.0	3.5	4.0
0.7	X	X	X	X	X	X
0.9	X	X				
1.1	X	X				
1.2	X	X		X		
1.3	X	X		X		
1.5	X	X				
2.0	X	X				
2.4	X	X				
3.5	X	X				

NOSE SHAPE

NOSE TYPE	30° HALF-ANGLE	15° HALF-ANGLE	STEPPED	CANARD	EXPANDED
MACH NO.					
0.7	X	X	X	X	X
0.9	X	X			
1.1	X	X			
1.2	X	X			
1.3	X	X			
1.5	X	X		X	
2.0	X	X			
2.4	X	X			
3.5		X			

FLOW SEPARATORS FORWARD OF SKIRT

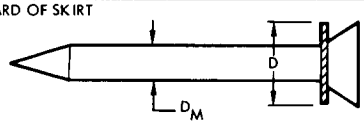

SEPARATOR-MOTOR DIAMETER RATIO, D/D_M	MACH NUMBER								
	0.7	0.9	1.1	1.2	1.3	1.5	2.0	2.4	3.5
2.0	X					X			X
2.5	X	X	X	X	X	X	X	X	X

FLOW SEPARATORS BASE OF TOWER

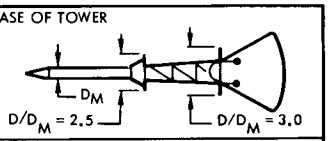

FORWARD SEPARATOR	0.7	0.9	1.1	1.2	1.3	1.5	2.0	2.4
ON	X	X	X	X	X	X	X	X
OFF	X	X	X	X	X			

FLOW SEPARATORS BASE OF MOTOR

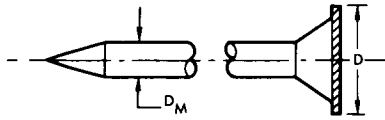

CLIPPED

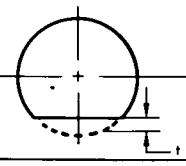

OFFSET

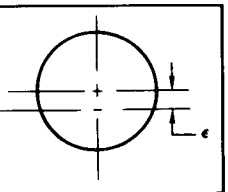

MACH NO.	SEPARATOR - MOTOR DIAMETER RATIO, D/D_M				CLIP DEPTH RATIO, t/D_M				OFFSET RATIO, ϵ/D_M		
					$D/D_M = 2.5$	$D/D_M = 3.5$			$D/D_M = 3.5$		
	2.5	3.0	3.5	4.0	0.23	0.4	0.6	0.75	0.2	0.3	0.4
0.7	X	X	X	X	X	X	X	X	X	X	X
0.9	X		X		X			X			X
1.1	X				X						
1.2	X		X		X			X			X
1.3	X				X						
1.5	X	X	X	X	X			X			X
2.0	X		X		X			X			X
2.4	X				X						
3.5	X		X					X			X

Figure 4. Wind Tunnel Test Summary—Launch Escape System Force Tests

CONFIDENTIAL

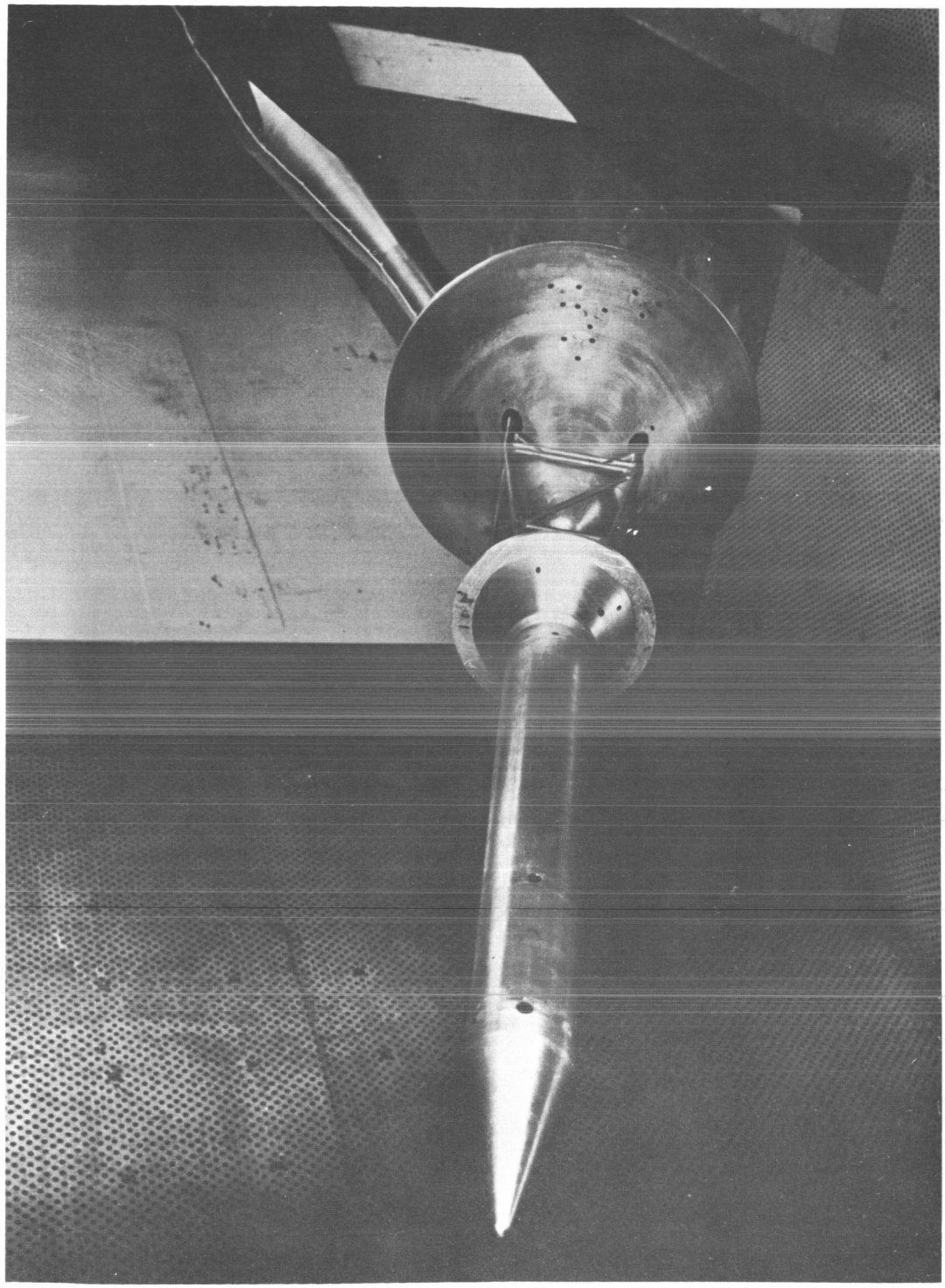

Figure 5. NAA Trisonic Installation of LES Model FS-2 with Flow Separator (DM = 2.5)

CONFIDENTIAL

CONFIDENTIAL

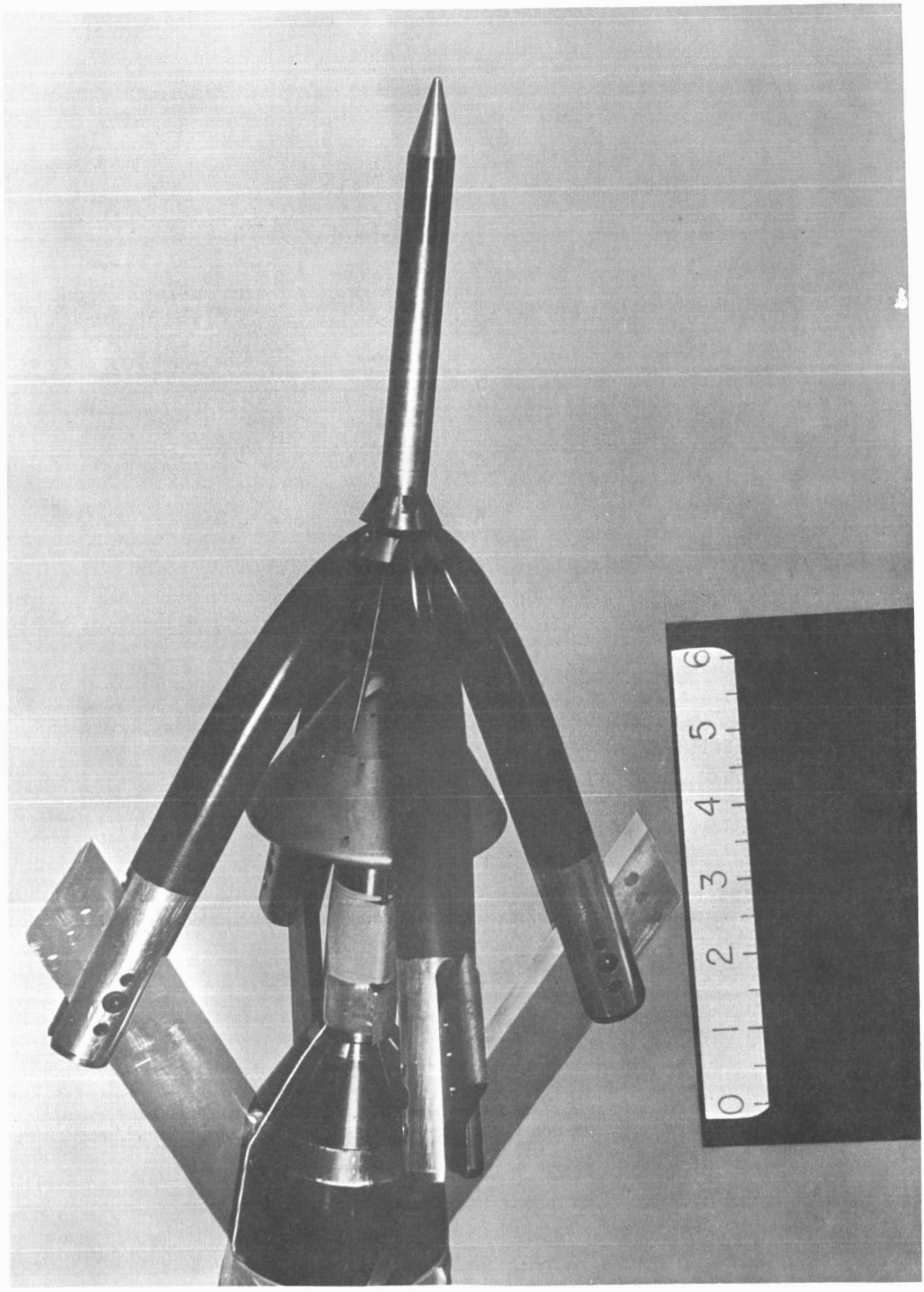

Figure 6. Installation of 0.002-Scale Model FS-1 NAA SAL Tunnel with Curved Solid Plumes

Entry Tests: To obtain aeroheating and pressure distributions on the command module forward face and afterbody by thin-skin-test technique that will provide the following:

1. Comparison of current prediction method with measured wind tunnel heating
2. Effect of Mach number on heating and distribution
3. Effect of Reynolds number on heating and distribution
4. Data that will correlate with the over-all wind tunnel program

Exit Tests: To obtain aeroheating distributions on the command module conical surface and service module that will provide the following:

1. Effect of the LES on heating
2. Effect of Mach number on heating and distribution
3. Data that will correlate with the over-all wind tunnel program.

Sufficient satisfactory repeat runs were made to establish confidence in the data. Data are being evaluated, and a report is being prepared summarizing the significant results in terms of aeroheating analysis and application to the Apollo project.

AERODYNAMICS

Entry Flight Systems

Aerodynamic characteristics of the command module have been determined for performance and control studies. The data were compiled from various wind tunnel programs. Figure 7 shows typical results of the variation in static longitudinal stability characteristics of the command module alone at angles of attack from zero to 180 degrees. These data are for Mach numbers 2 and 5 and are representative of the data available for Mach numbers from 0.7 to 9. The pitching moment coefficients are referenced to the center of gravity indicated in the illustration. The reference dimensions are the diameter of the command module (12.83 feet) and the cross-sectional area (129.4 square feet). Both dimensions depict a second stable trim point at an angle of attack near 70 degrees. This condition is not desirable from entry considerations, and investigations have been initiated to eliminate it.

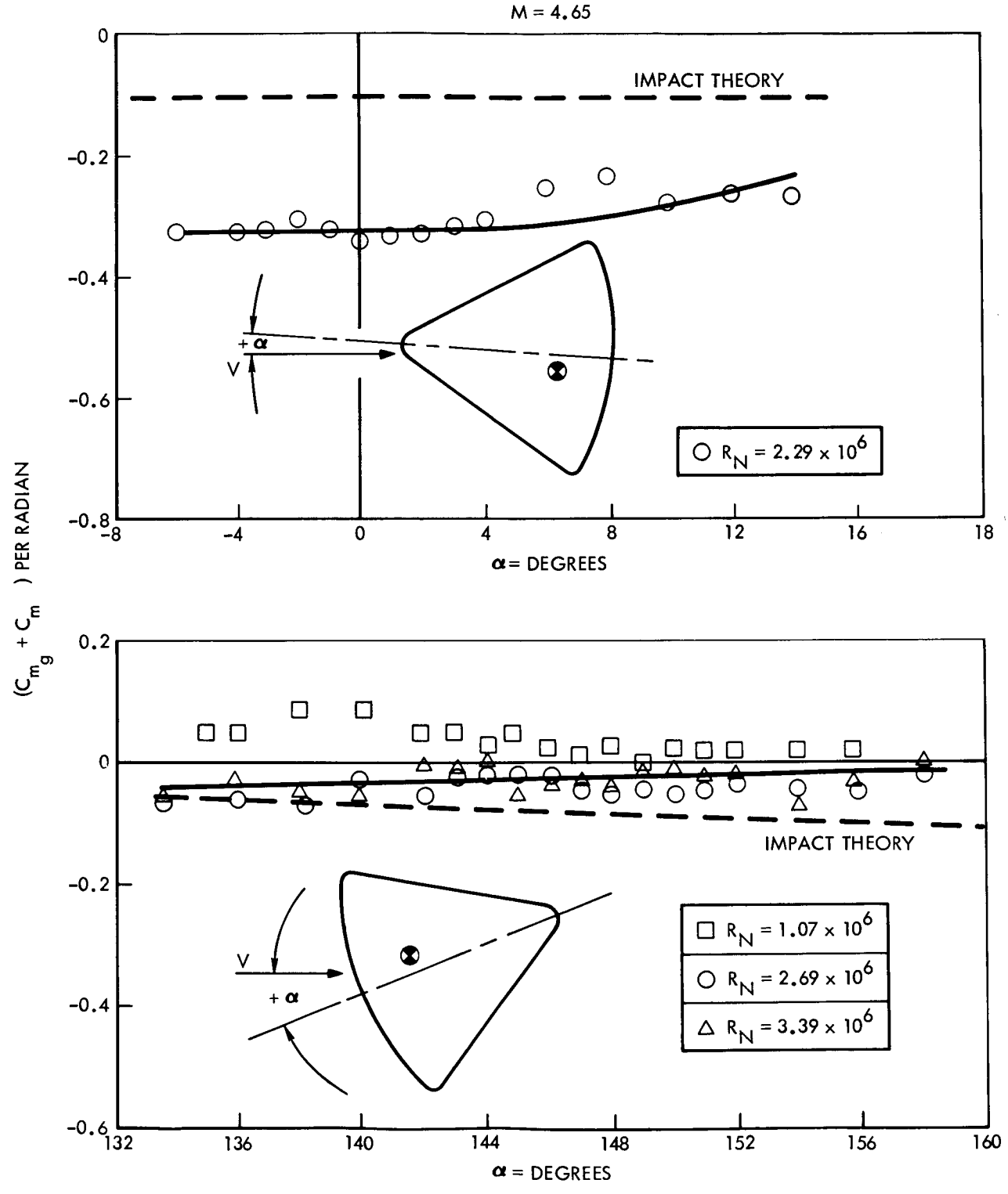

Figure 7. Static Longitudinal Characteristics of Command Module at Entry Mach Numbers

[redacted]

Table 5. Aeroheating Wind Tunnel Test JPL - 21-Inch Hypersonic Wind Tunnel Test Conditions

Mach	Re/in.	Pr cm Hg	T_{t_o} F
5.99	23,750	200	1102
6.10	198,500	870	517
6.09	248,500	870	360
7.22	23,500	330	1125
7.35	92,500	1370	1105
7.35	232,600	2020	620
8.83	19,350	503	1205
9.07	57,000	1600	1208
9.07	149,200	3400	993

Pr - Tunnel stagnation pressure

Re/in - Reynolds number per inch

T_{t_o} - Tunnel stagnation temperature

A preliminary analysis was completed of the dynamic stability data obtained during tests conducted at the Langley Research Center in March 1962. Damping derivatives in pitch at Mach number 4.65 for the command module alone, with the apex fore and aft, are shown in Figure 8. Comparison of the data with impact theory indicates that reasonable agreement exists for the apex aft. The correlation is poor with the apex forward.

A significant Reynolds number effect on the data was noted indicating the necessity for good Reynolds number simulation in future dynamic tests of the Apollo entry configuration.

A study has been initiated to define the requirements for solving the flow field around a blunt body for the purpose of computing electron density distributions surrounding the command module during entry.

CONFIDENTIAL

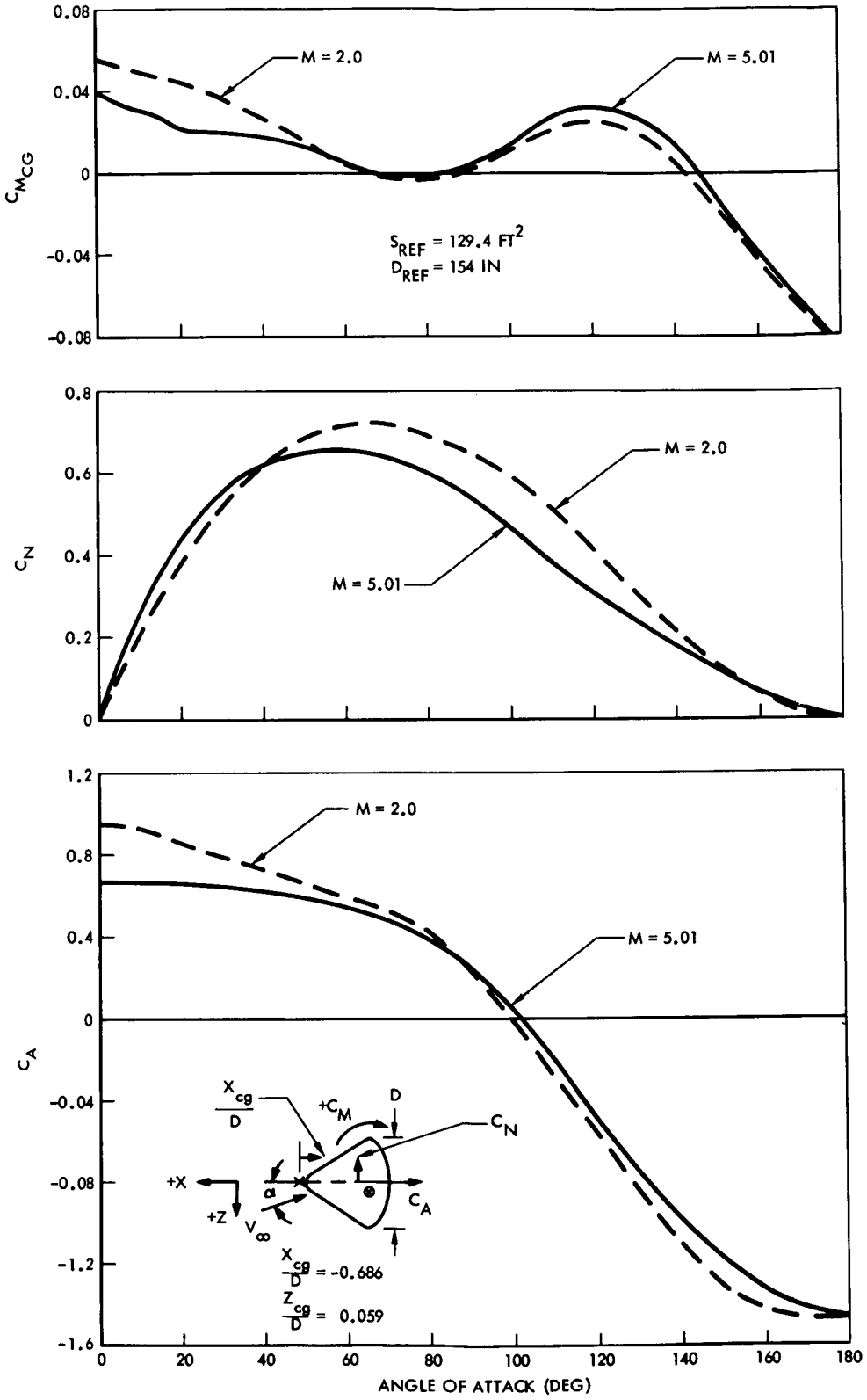

Figure 8. Command Module Variation of Damping in Pitch with Angle of Attack

CONFIDENTIAL

Recovery Flight

The recovery system is defined as the command module flight regime at Mach numbers below 2.0. Data required for performance and control studies have been assembled from wind tunnel tests.

The static longitudinal stability characteristics of the command module at Mach numbers of 0.7, 1.1, and 1.5 have been evaluated and are shown in Figure 9. These data depict the variation of pitching moment, normal force, and axial-force coefficients with an angle of attack from zero to 180 degrees. As in the case of the Mach number 2.0 and 5.0 data, a second stable trim point exists. In this case, however, the undesirability of the second trim point is associated with the parachute ejection and possible entanglement with the command module in this attitude. The data shown are for the configuration with the apex cover attached.

Launch Escape System (LES) Aerodynamics

Various modifications of the escape rocket configuration have been studied in an effort to improve the static longitudinal stability of the LES. These configurations are shown in Figure 9. Variations in nose shape and in the geometry of the fairing at the base of the escape rocket were investigated.

The data on nose shapes did not show any significant improvement in stability. The largest gains were obtained through the use of flow separators. The flow separator, a flat circular disc with the centroidal axis coincident with the longitudinal axis of the body, appreciably influences the downstream wake characteristics and affects the resultant forces on the command module. Discs of various diameters were mounted at several longitudinal stations on the escape rocket and command module and were tested at Ames. Their effects on static longitudinal stability for Mach numbers 0.9 and 2.4 are presented in Figure 10.

Results of this study indicate that the addition of the flow separators to the basic configuration results in the following:

1. An increase in the static longitudinal stability at low angles of attack

2. General increase in the negative pitching moment coefficient and five-fold gain in the maximum negative pitching-moment coefficient

3. Extension of the pitching moment curve crossover points to higher angles of attack

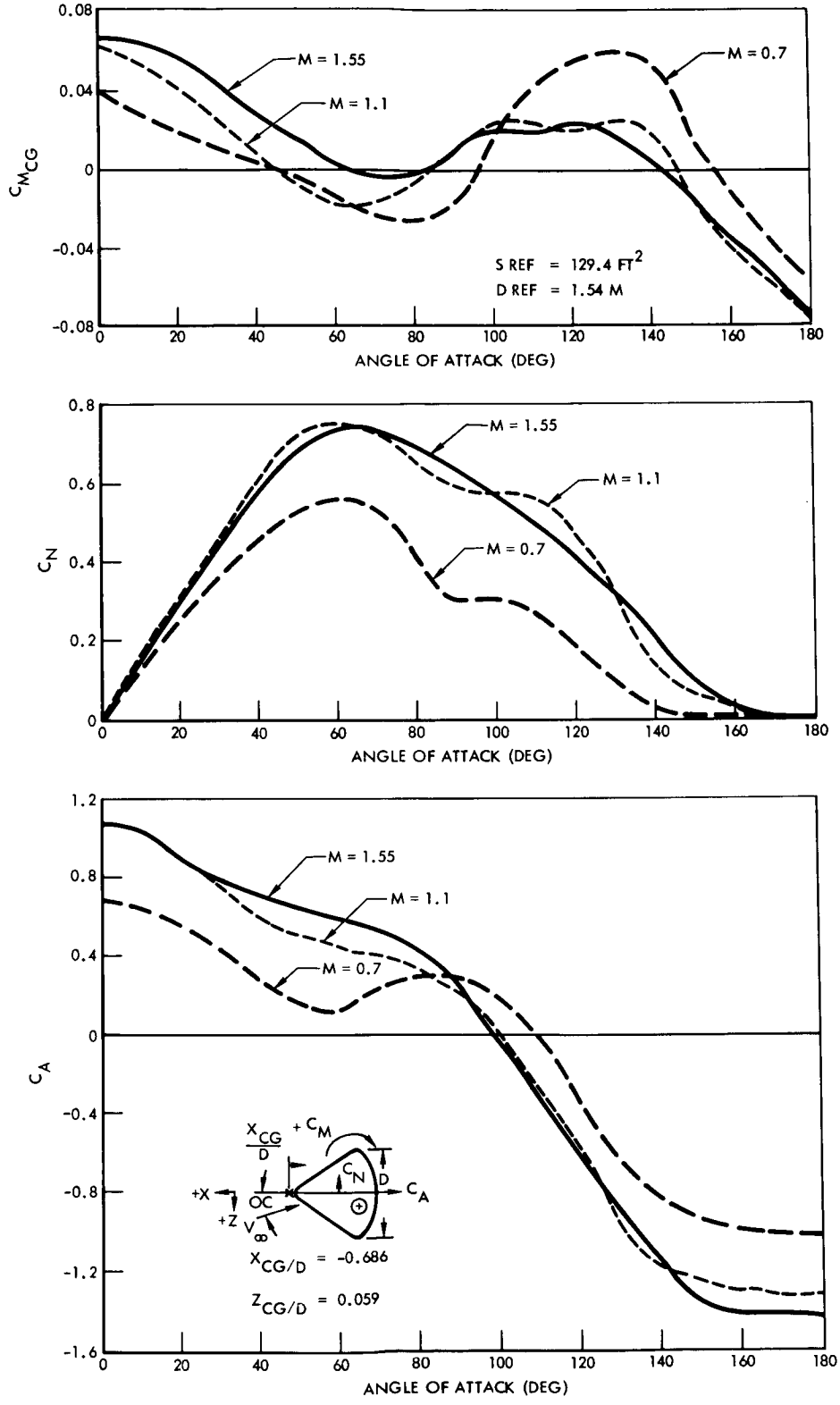

Figure 9. Static Longitudinal Aerodynamic Characteristics of the Command Module at Recovery Mach Numbers

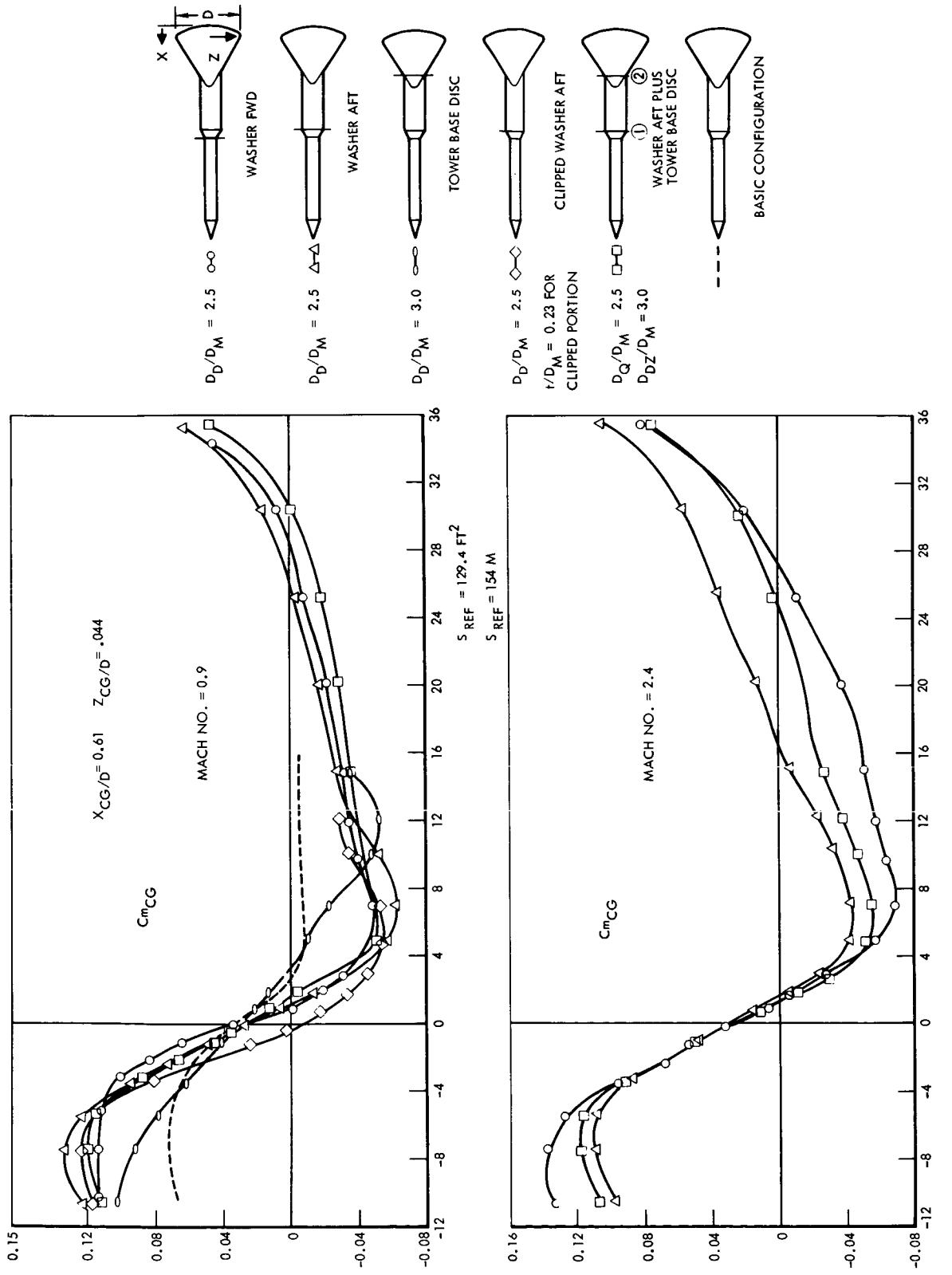

Figure 10. Effect of Flow Separator Geometry on Launch Escape System Stability Characteristics

4. Large negative C_{mo}'s through the use of a clipped flow separator which results in an asymmetric wake (This is a relatively simple method for eliminating the positive C_{mo}'s brought about by the offset center-of-gravity location.)

Jet Effects Analysis

Preliminary estimates of the jet effects on the LES stability characteristics have been completed. These studies relate the influence of jet exhaust by effectively eliminating a percentage of the stabilizing interference wake between the rocket motor case and the command module. The effects of impingement of the jet on the command module are not included.

A comparison of the static longitudinal stability characteristics of the LES with escape rocket operative and inoperative is shown in Figure 11. These data are for Mach number 1.5. The reduction in stability due to jet effects is apparent.

Studies have been continued to determine the interaction between the free stream and the exhaust jet flow fields. The bending of the jet in the direction of the free stream has been estimated. In the analysis it was assumed that the jet boundary is inviscid and may be treated as a solid surface. Figure 12 shows the bent plumes corresponding to abort at the maximum dynamic pressure condition (Mach number 1.6 at 40,000 feet). Impingement occurs on the lower surface of the command module, and a restoring moment is expected to result.

A study of the simulation parameters for the hydrogen peroxide motor has been completed. Good simulation of the LES motor can be obtained by matching the thrust coefficient and nozzle geometry in model tests.

Figure 13 presents the full-scale LES thrust coefficient for a number of typical abort trajectories, from a nominal 100-nautical-mile orbit C-1 boost trajectory. These trajectories define a band of operating conditions for the LES escape motor. Also included in Figure 13 are the thrust-coefficient capabilities of the FSJ-1 model installed in the Langley 16-foot transonic tunnel. A propellant metering valve allows variations in motor chamber pressure; any specific operating condition can be simulated in the Mach range 0.5 to 1.35.

Model design requirements have been established for the hydrogen peroxide rocket. Figure 14 presents a sketch of the model and indicates the most important characteristics. The propellant is brought on board through a stainless steel transfer line coiled about the balance point to minimize interference effects. The escape tower legs are used to transfer

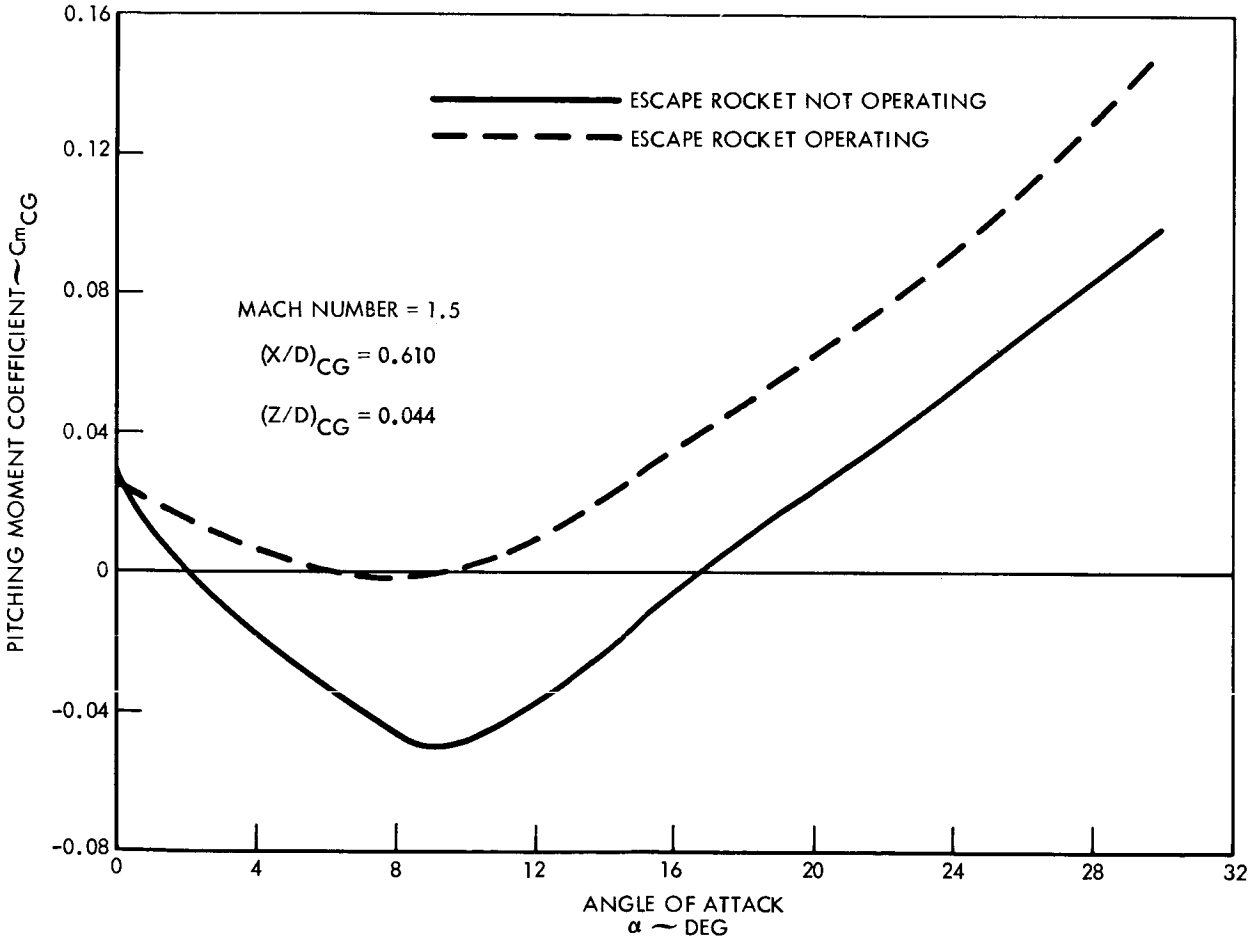

Figure 11. Effect of Rocket Motor Operation on Launch Escape System Pitching Moment Coefficient

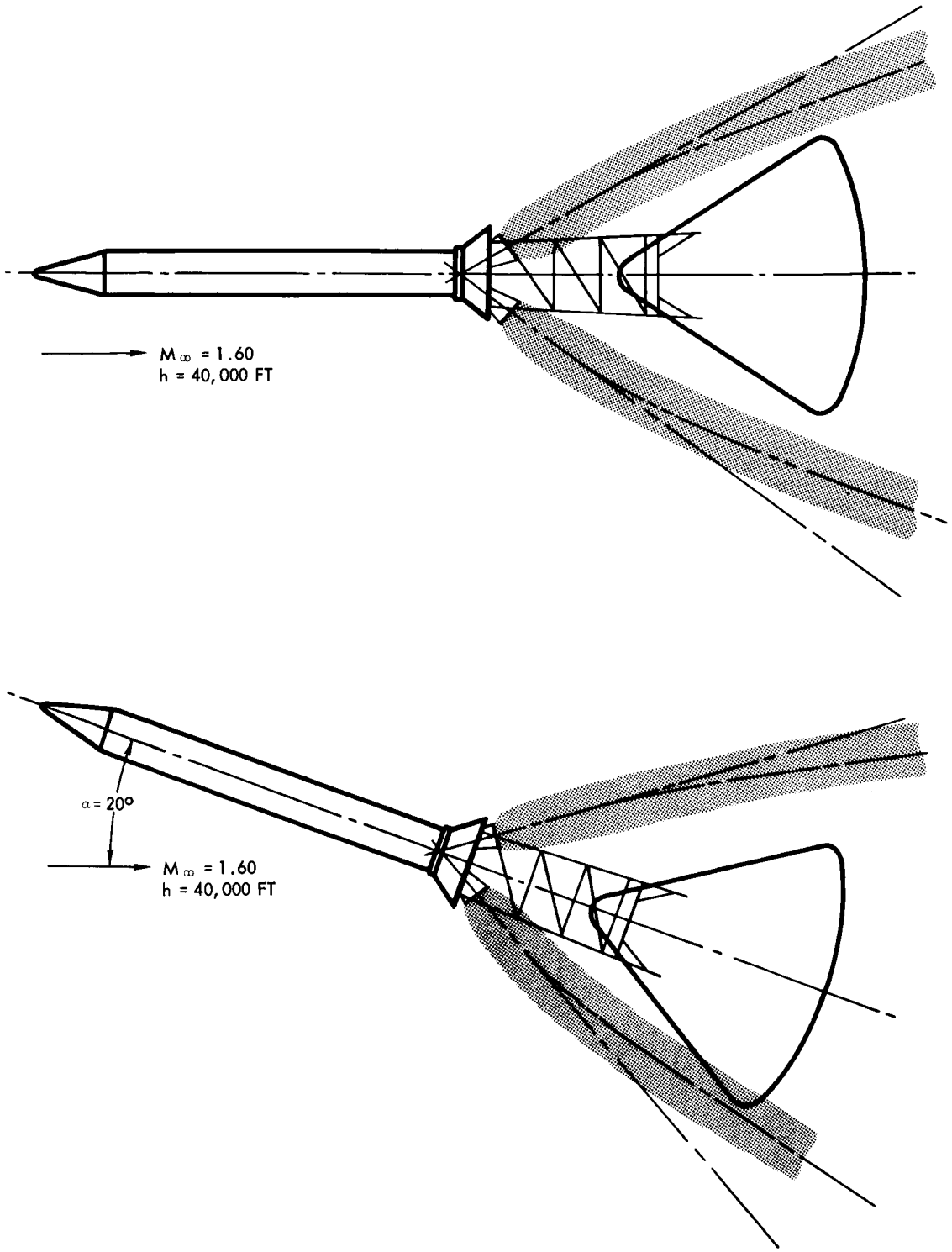

Figure 12. Bending of Escape Rocket Exhaust Jets

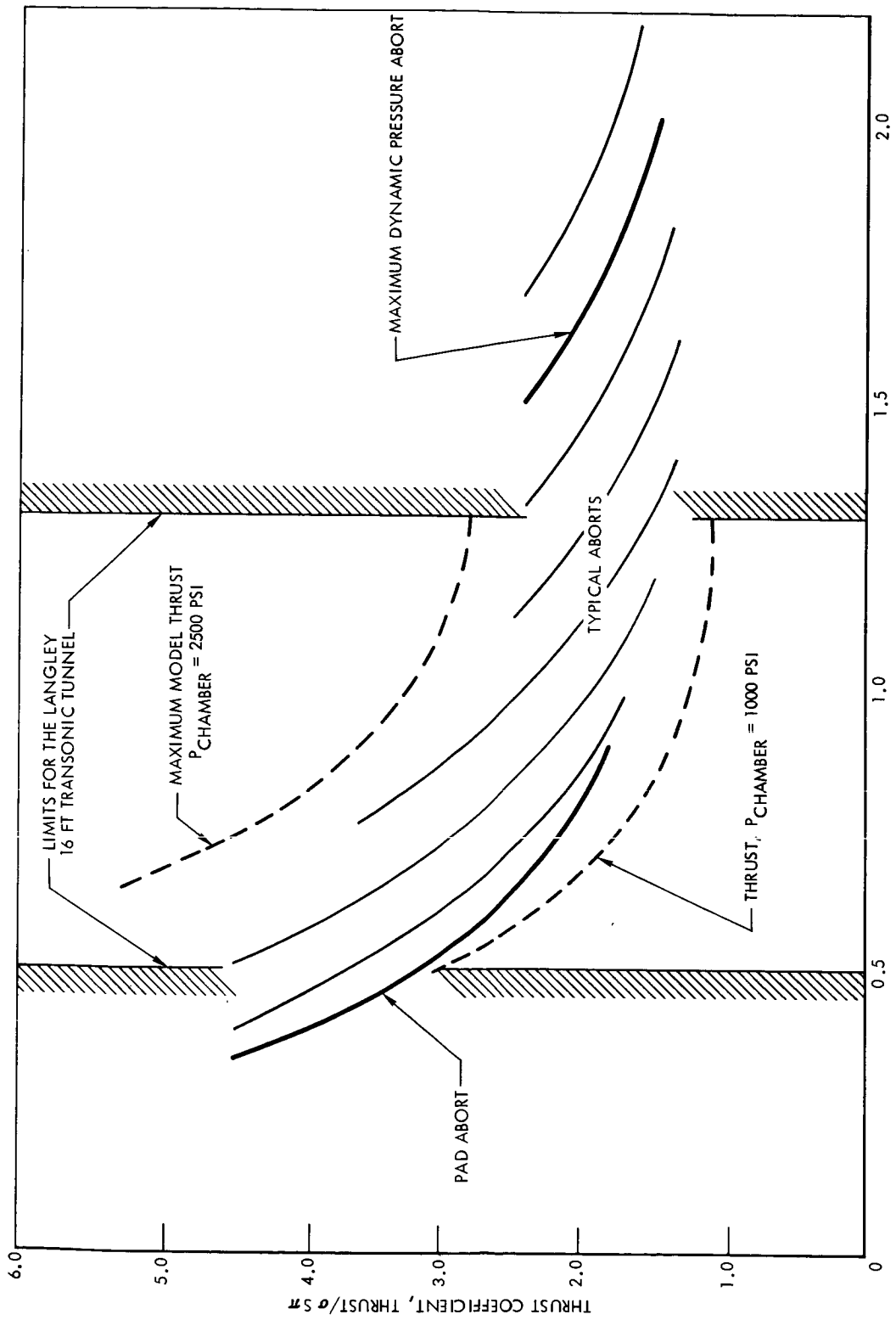

Figure 13. Thrust Coefficient Simulation

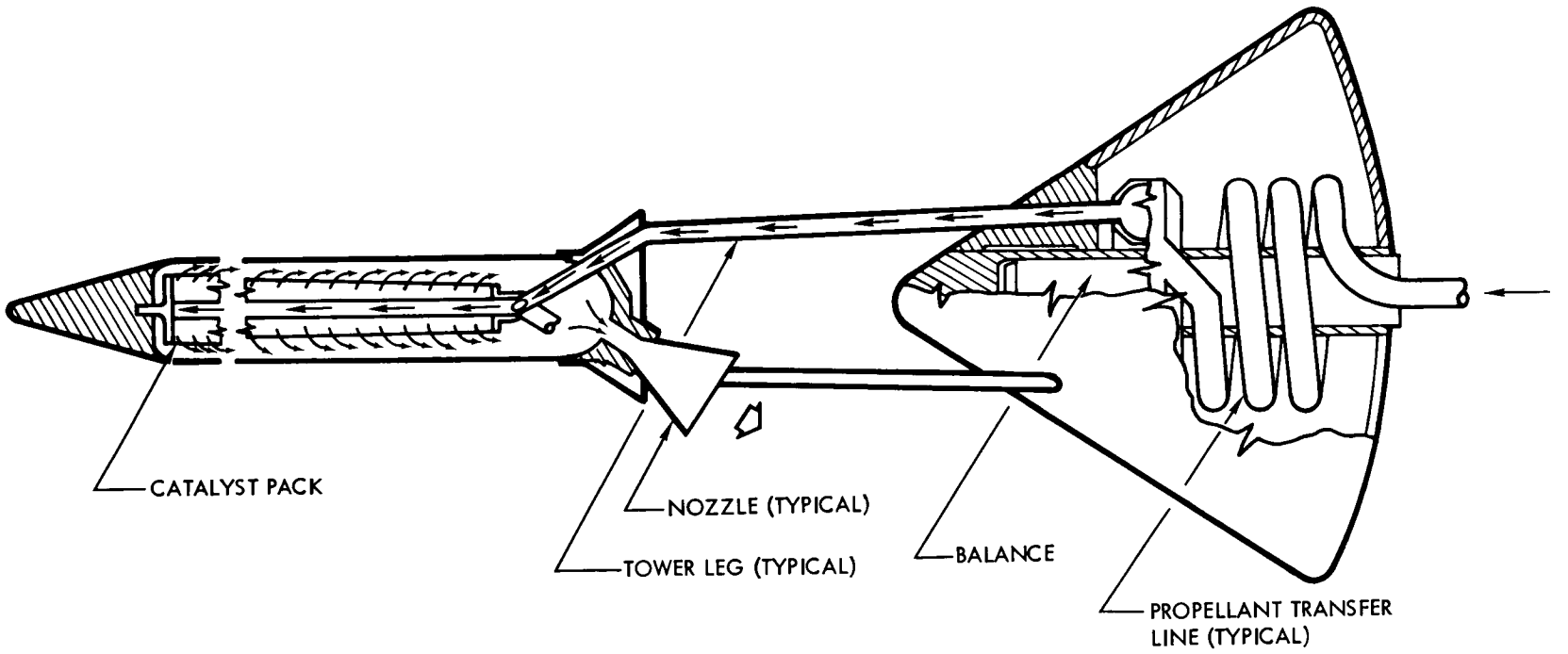

TYPICAL OPERATING CONDITIONS

PARAMETER	SYMBOL	FULL SCALE	MODEL (0.085 SCALE)
FREE STREAM MACH NUMBER	(M_o)	1.30	1.30
PRESSURE ALTITUDE	(h, FT)	30,000	26,000
THRUST COEFFICIENT	$(C_T = \frac{F}{q_o S_\pi})$	2.44	2.44
MOTOR CHAMBER PRESSURE	(P_c, PSIA)	1,750	2,280
MOTOR PROPELLANT WEIGHT FLOW	$(\dot{\omega}_p, \frac{LB}{SEC})$	720	13.2
JET MOMENTUM RATIO - JET TO FREE STREAM	$(\frac{Pe\ Ve^2}{Po\ Vo^2})$	27.8	29.2
MASS FLOW RATIO - JET TO FREE STREAM	$(\frac{Pe\ Ve}{Po\ Vo})$	5.38	6.27
RATIO OF SPECIFIC HEATS OF EXHAUST PRODUCTS	(γ)	1.23	1.26

Figure 14. Simulation Parameters—Jet Effects Model

the liquid monopropellant from the command module to the decomposition chamber located within the aerodynamic mold lines of the escape motor. The hydrogen peroxide is then decomposed and the gases exhausted through four scaled nozzles to simulate the full-scale exhaust plume characteristics. The chamber pressure can be varied over a wide range to simulate various full-scale motor operating conditions as previously mentioned. Included in Figure 14 the model motor parameters are compared to full-scale for a typical operating condition of abort at Mach number 1.3 at 30,000 feet. Matching C_T provides a close simulation of the jet momentum ratio and the mass flow ratio.

FLIGHT DYNAMICS

Entry Dynamics

Cross-range sensitivity has been investigated by use of the 6-degree-of-freedom analog-DDA simulator. Results indicate that a roll-rate limit of 20 degrees per second and a roll-acceleration limit of 10 degrees per second per second are adequate for nulling cross-range control errors. The results, contingent in part on pilot techniques and learning curves, are subject to modification. It was found that adequate control can be exercised at higher roll rates if the thrust level is sufficiently large to prevent overshoot when the roll angle is reversed.

Range prediction equations have been mechanized on the analog-DDA computers to provide the pilot with a continuous display of the desired landing site versus vehicle maneuver capability. At the outset, this mechanization will be utilized to establish pilot control technique and sequencing for closed-looped range studies.

The main effort was devoted to an evaluation of two of the more promising stabilization and control system configurations through use of a combined analog-DDA entry simulation. The basic difference between the two configurations is the location of the attitude and rate sensors, one having sensors centered along the principal body axes and the other having sensors centered along the design stability axes. The latter system uses a cross feed which improves system response and results in lower propellant consumption (See Figure 15). For this system, and with propellant consumption and system response as principal design criteria, a preliminary evaluation of analog results indicates that the system parameters shown in the following listing are optimum.

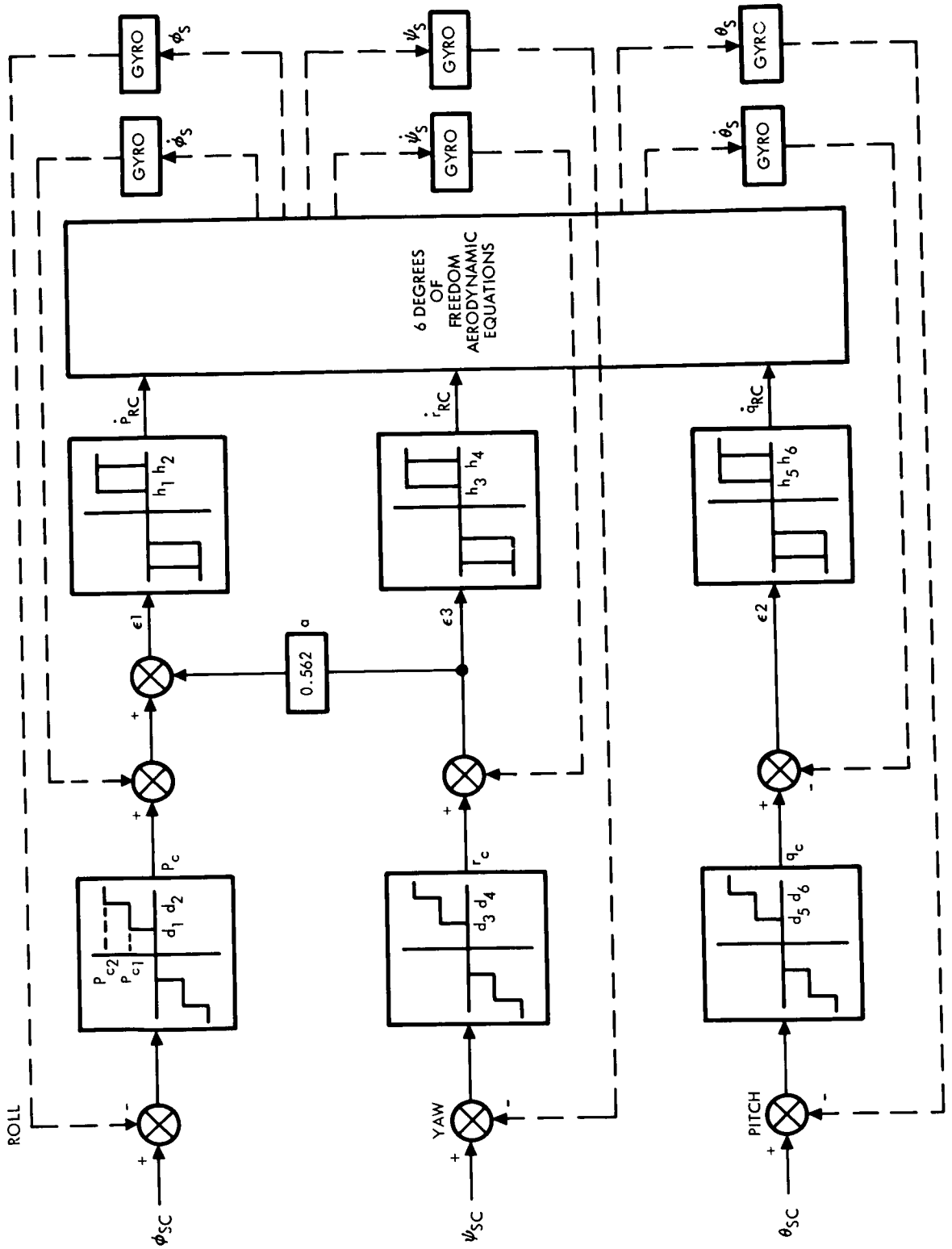

Figure 15. Entry Vehicle Control System

Roll Control				Yaw Control		Pitch Control	
d_1	3 deg	h_1	0.3 deg/sec	h_3	0.5 deg/sec	h_5	0.5 deg/sec
d_2*	21 deg	h_2	0.4 deg/sec	h_4	0.6 deg/sec	H_6	0.6 deg/sec
P_{c1}	5 deg	a	0.562	R_{RL}	10 deg/sec^2	Q_{RC}	10 deg/sec
P_{c2}*	20 deg	P_{RC}*	12 deg/sec				

*This parameter is dependent on trajectory-control-maneuver requirements.

An evaluation was conducted of the dynamics and the propellant consumption during a rolling entry. Roll rates of 10 to 40 degrees per second were considered for the eight possible combinations of rate systems. The results of this investigation are summarized in the following directives:

1. Initiate attitude control for q 10 pounds per square foot.
2. Initiate roll rate, as well as 3-axes rate damping, for q 10 pounds per square foot.
3. Deactivate the control system in the event of malfunction.
4. Increased roll rates result in increased fuel consumption.
5. Enlarge system deadbands to 1.5 degrees per second to maintain fuel consumption at less than 1 pound per minute.

Parachute Deployment Envelopes

The drogue and main parachute deployment envelopes were determined (Figure 16). The limits indicated in this illustration reflect the results of an evaluation of the prerecovery trajectories associated with recovery following either entry or abort. Of the two conditions, recovery following abort appears to be more stringent. Parachute subsystem design criteria were formulated and are being issued.

Launch Escape System (LES)

In an effort to overcome the difficulties experienced with the analog computer during an investigation of launch escape dynamics, a major

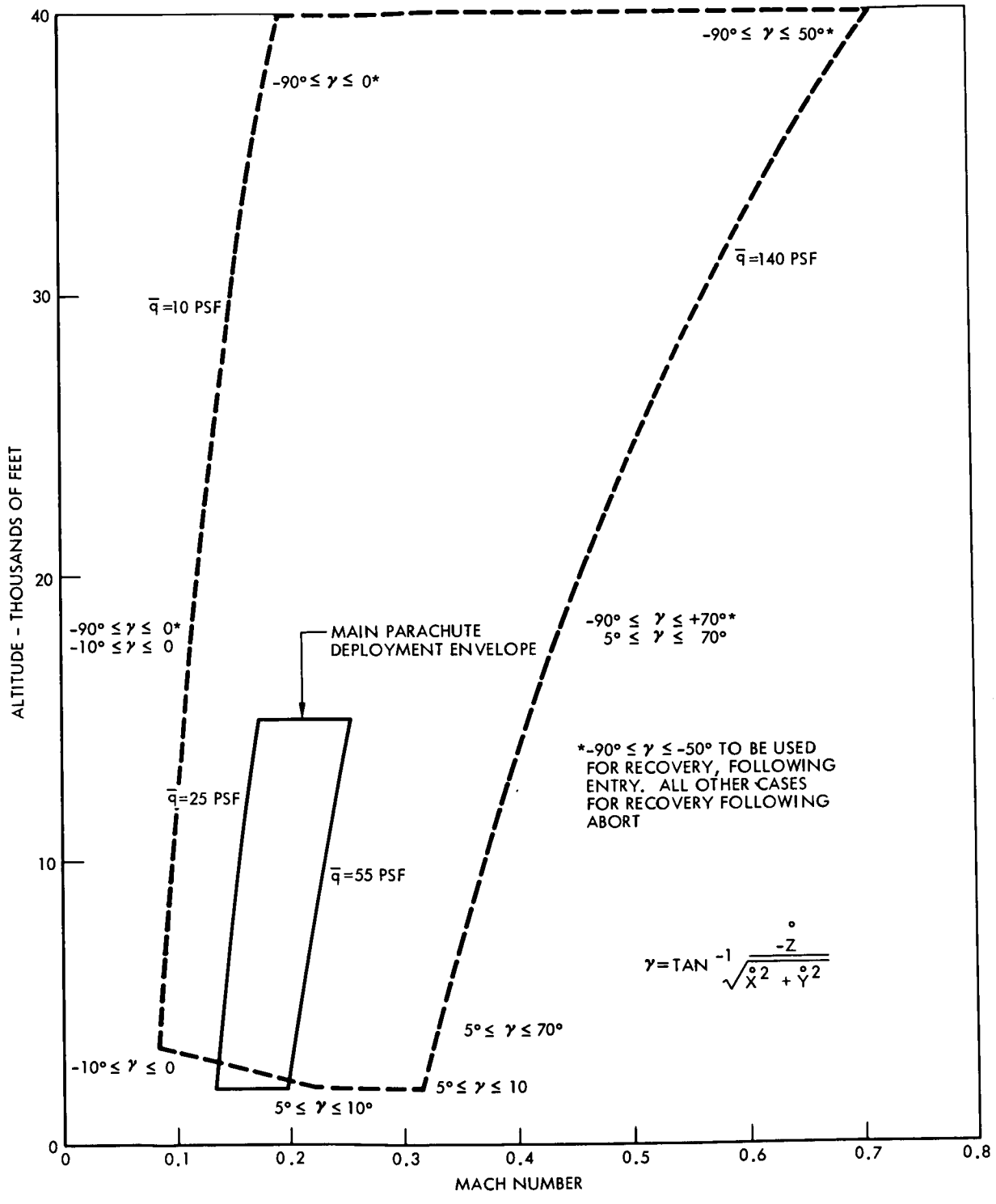

Figure 16. Drogue Parachute Deployment and Operating Envelope

attempt was made to develop more satisfactory digital and analog-digital programs. A digital 3-degree-of-freedom pitch plane program was written and is in operation; a more general 6-degree-of-freedom digital program is being developed.

A digital investigation was conducted of launch escape with a passive system in which the main thrust vector is offset from the center of gravity. The purpose of this study was to determine the effect of main-thrust vector alignment tolerances, jet-on effects, the effect of additional ballasting of the vehicle, the effect of variations in the main motor thrust levels and to establish maximum permissible authority for the thrust vector control system for fail-safe operation.

On the basis of the results of this investigation, it appears that a passive system can be made to operate. However, the ballast requirements are considerably greater than for those of the open-loop system, and high tumbling rates may be induced during high-altitude abort if the system is designed for a satisfactory pad-abort trajectory. A possible performance improvement could be obtained by reducing the thrust level with a corresponding increase in burning time, but this change would require a relaxation in the design requirements during the high dynamic-pressure condition. Because of these factors and the extreme sensitivity of pad-abort trajectories to initial angular rates and motor tolerances, investigation of the passive system was discontinued in favor of the open-loop system.

Various open-loop systems employing kicker rockets for launch escape were investigated. These rockets, located at the top of the main motor, are fired laterally. Preliminary results indicated that the open-loop system is superior to the passive system.

Kicker rockets having a shorter burning time seem more desirable than slower-burning rockets. Short-duration rockets produced lower minimum apogee altitudes and longer ranges at acceptable altitudes. Engine misalignment in yaw may introduce sizable roll accelerations that would, in turn, cause accelerations in pitch and yaw. Compensation for the induced tumbling would require either additional ballast or a roll-control system. The effect of roll on the allowable engine tolerance envelope is shown in Figure 17. Use of the command module control system was considered. Although the available torque is small when compared with the initial torque from the abort engine, this system is able to reduce and eventually stop the roll rate as the thrust of the abort engine decays. The maximum roll angle is thus limited to less than 180 degrees. A considerable relaxation in the engine-tolerance envelope for the nontumbling case results as shown in Figure 17.

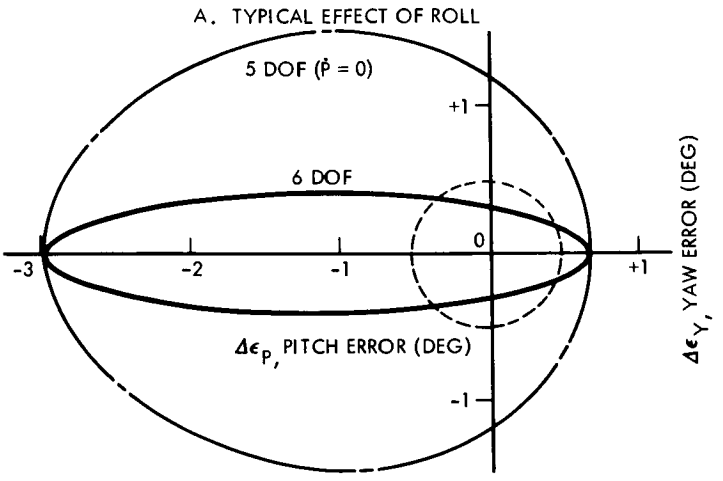

B. TYPICAL EFFECT OF COMMAND MODULE ROLL CONTROL

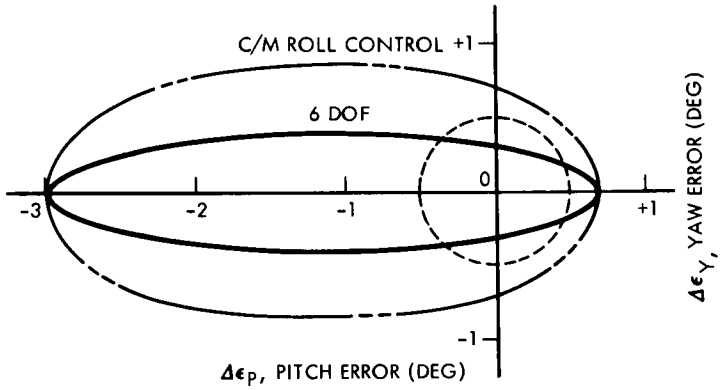

C. TYPICAL EFFECT OF OFFSETTING ABORT THRUST VECTOR FROM CENTER OF GRAVITY TOWARD VEHICLE CENTERLINE

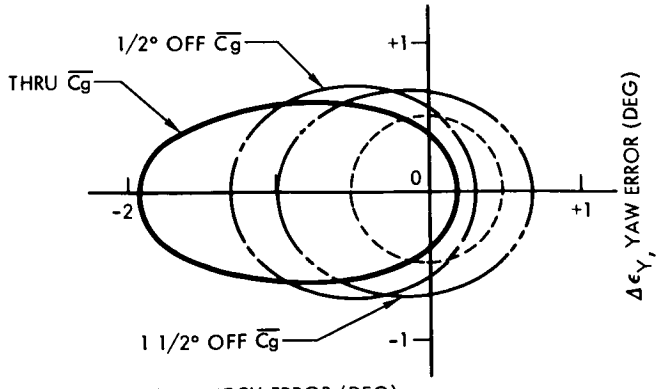

NOTE: ENGINE POSITION TOLERANCE IS 1/2 DEG CIRCLE IN ABOVE FIGURES

Figure 17. Engine Tolerance Envelope for Tumbling

Figure 16 shows that positive pitch error is marginal. Allowable pitch error can be increased by offsetting the abort thrust vector from the center of gravity toward the vehicle centerline. The result is an increase in the pitch-and-yaw engine tolerance because of the effective shifting of the whole engine tolerance envelope along the pitch error axis.

The yaw error was also increased since the maximum allowable yaw error occurs at zero pitch error as seen from a study of Figure 17. The pitch-plane kick rocket was defined by determining the thrust level necessary for a 4000-foot apogee altitude with maximum engine tolerance, thrust level being dependent upon the magnitude of the jet effects and ballast, as shown in Figure 16.

PERFORMANCE AND TRAJECTORIES

Service Module Design and Mission Flexibility Studies

Several tradeoff studies affect the design of the universal service module. To be universal, the service module must be capable of performing two functions: lunar landing, take-off, and transearth boost for the direct mission concept and lunar-orbit injection and transearth injection for the lunar-orbital rendezvous concept.

Initial studies show that the lunar-orbital rendezvous concept has the greater propellant requirement and, for this reason, determines the size of the universal service module.

Variations of mission characteristic velocity and translunar injected gross weight for the lunar rendezvous mission were investigated to determine mission capability and service module propellant requirements. Characteristic velocity requirements covering 100 percent of the month capability and translunar midcourse velocity variations were used for this study and are shown in Table 6.

Typical mission performance capability as a function of the injected weight and the above velocity variations is shown in Figure 18. Increasing the injected gross weight and decreasing the velocity requirements enlarges the mission capability as illustrated.

These data are based on lunar orbit injection in the lunar equatorial plane. The minimum characteristic velocity requirements are as listed in Table 7 when this trajectory restraint is eliminated and a 2-hour launch window centered about a launch azimuth of 90 degrees is used.

CONFIGURATION	BASIC CAPABILITY	MISSION CAPABILITY FOR JULY 1966 SAN ANTONIO LANDING WOOMERA LANDING 90° MAX POSITIVE DECLINATION 270° MAX NEGATIVE DECLINATION
$W_{C/M}$ = 8,340 LB $W_{S/M}$ = 47,195 LB $W_{S/M\ FUEL}$ = 36,207 LB W_{GROWTH} = 1,000 LB W_{LEV} = 20,000 LB INJECTED GROSS WT = 80,000 LB	A B C TRANSLUNAR MIDCOURSE 500 300 0 % OF MONTH: SAN ANTONIO 0 0 39.4 S. ANTONIO & WOOMERA 0 0 78.4 V_2 MARGIN 0 0 0	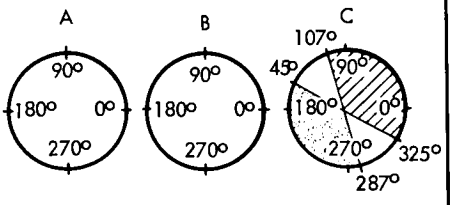
$W_{C/M}$ = 8,340 LB $W_{S/M}$ = 49,807 LB $W_{S/M\ FUEL}$ = 38,500 LB W_{GROWTH} = 1,000 LB W_{LEV} = 20,000 LB INJECTED GROSS WT = 82,500 LB	A B C TRANSLUNAR MIDCOURSE 500 300 0 % OF MONTH: SAN ANTONIO 0 33.9100 S. ANTONIO & WOOMERA 0 67.8100 V_2 MARGIN 0 0 25	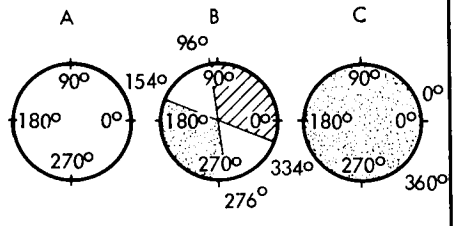
$W_{C/M}$ = 8,340 LB $W_{S/M}$ = 51,195 LB $W_{S/M\ FUEL}$ = 39,718 LB W_{GROWTH} = 1,000 LB W_{LEV} = 20,000 LB INJECTED GROSS WT = 84,000 LB	A B C TRANSLUNAR MIDCOURSE 500 300 0 % OF MONTH: SAN ANTONIO 23.3 45.5 100 S. ANTONIO & WOOMERA 46.6 91.0 100 V_2 MARGIN 0 0 220	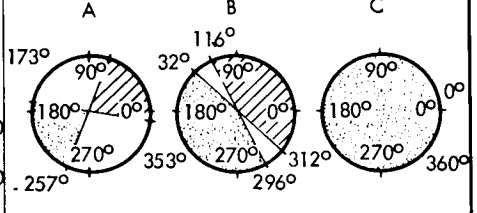
$W_{C/M}$ = 8,340 LB $W_{S/M}$ = 53,125 LB $W_{S/M\ FUEL}$ = 41,412 LB W_{GROWTH} = 1,000 LB W_{LEV} = 20,000 LB INJECTED GROSS WT = 85,930 LB	A B C TRANSLUNAR MIDCOURSE 500 300 0 % OF MONTH: SAN ANTONIO 42.5 100 100 S. ANTONIO & WOOMERA 85.0 100 100 V_2 MARGIN 0 0 470	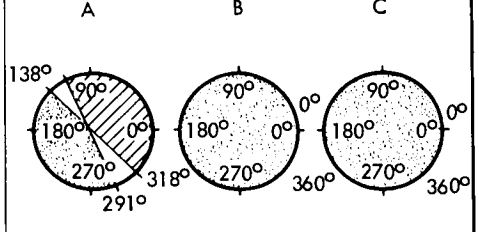

Figure 18. Configuration Summary

Table 6. Characteristic Velocities - Lunar Equatorial Plan (100 percent of Month)

Flight Phase	Velocity (ft/sec)		
	A	B	C
TRANSLUNAR			
Midcourse	500	300	0
Orbit Injection	3121	3121	3121
Plane Change	610	610	610
Control Allowance (3%)	127	121	112
Total ΔV_1	4358	4152	3843
TRANSEARTH			
Timing Orbit	250	250	250
Rendezvous	300	300	300
Transearth Injection	3930	3930	3930
Midcourse	500	500	500
Control Allowance	130	130	130
Total ΔV_2	5130	5130	5130

For a fixed transearth injected weight, the large variation in service module propellant and lunar excursion module design weight is evident (Figure 19) as the service module characteristic velocity requirements change (Table 7).

The effect of the universal service module design sized for the case shown in Figure 19 on the translunar injected weight for the direct or earth orbit rendezvous concept is illustrated in Figure 20.

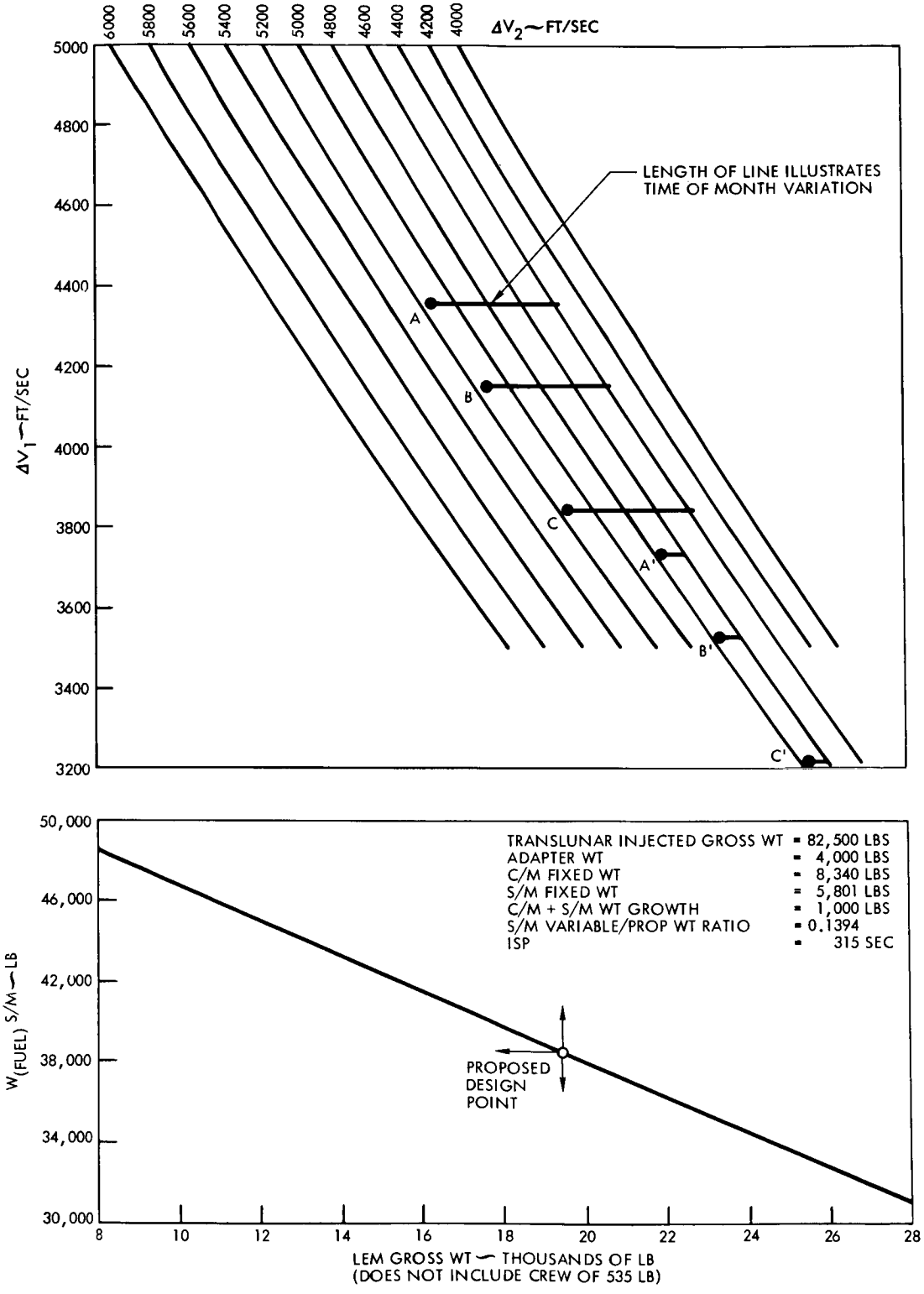

Figure 19. Lunar Excursion Module and Service Module Performance Trade-Off

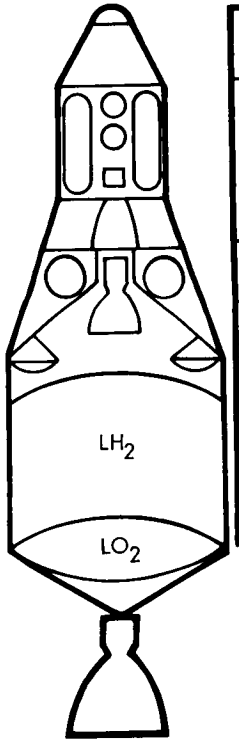

	STAGE	TOTAL
C/M	8,340	8,340
S/M NO. 2 FUEL	36,630	
S/M NO. 2	47,910	56,250
WEIGHT GROWTH	1,000	57,250
S/M NO. 1 FUEL	9,260	
S/M NO. 1	17,480	74,730
LBM SYSTEM	PUMP FED	$\nu_\beta = 0.88$
LBM FUEL	86,550	
LBM	98,350	173,080

CHARACTERISTIC VELOCITY (FT SEC)

TRANSEARTH: S/M NO. 2	
LUNAR BOOST	5,980
TRANSEARTH INJECTION	3,355
MIDCOURSE	500
CONTROL ALLOWANCE	500
TOTAL	10,335
LUNAR LANDING: LSM NO. 1	
INITIAL DESCENT RETRO	501
TRANSLATION & LANDING	715
CONTROL ALLOWANCE	122
TOTAL	1,338
TRANSLUNAR: LBM	
MIDCOURSE	300
ORBIT INJECTION	3,121
PLANE CHANGE	259
ORBIT TRANSFER	123
ORBITAL RETRO	5,330
CONTROL ALLOWANCE	274
TOTAL	9,407

Figure 20. Weights and ΔV's for Direct Lunar Landing

Table 7. Minimum Characteristic Velocities (100 percent of Month)

Flight Phase	ΔV (ft/sec)		
	A	B	C
TRANSLUNAR			
Midcourse	500	300	0
Orbit Injection	3123	3123	3123
Control Allowance (3%)	109	103	93
Total ΔV_1	3732	3526	3216
TRANSEARTH			
Timing Orbit	250	250	250
Rendezvous	300	300	300
Transearth Injection	3571	3571	3571
Midcourse	500	500	500
Control Allowance	139	139	139
Total ΔV_2	4760	4760	4760

Lunar-Landing Mission Launch Dates

Launch dates which were determined for the Apollo lunar-landing mission for the years 1965 and 1966 permit the following:

1. Launch from Cape Canaveral at least six hours before sunset and within range safety limits

2. Lunar landing at the Sea of Tranquility 2-1/2 to 3-1/2 days after launch and 3-1/2 days after lunar dawn (45-degree lighting)

3. San Antonio approach within the permissible entry corridor approximately 65 hours after lunar take-off

4. Landing at San Antonio at least three hours before local sunset.

Seven permissible launch dates for 1965 and six launch dates for 1966

resulted, beginning in June of each year and occurring at approximately one-month intervals. The most favorable launch date is 20 September 1966. This date corresponds to near-maximum negative declination of the moon at encounter.

Terminal Range Control

A steering scheme was developed for controlling the lateral and longitudinal ranges during the atmospheric entry phase of the Apollo mission. This scheme was included in the trajectory program. The method is based on an approximate closed form range prediction solution. Since the method does not depend upon reference trajectory or trajectory integration techniques, it is applicable to most entry conditions. Thus far, emphasis has been on lunar return entries and successful trajectories were obtained throughout the corridor. Representative terminal longitudinal range errors of 13 and 23 nautical miles have been obtained for commanded ranges of 3000 and 6000 nautical miles respectively. Terminal lateral range errors have been less than 5 nautical miles for three bank angle reversals.

Ballistic Entry From Lunar Missions

The overall objective of this study was the examination of the ballistic (zero vertical lift) entry maneuver as a possible back-up flight mode for entry from lunar missions. Basic objectives attained were the establishment of guidance (corridor) requirements for successful entry, determination of touchdown (range) dispersions, and evaluation of effects of atmospheric density variation on corridor requirements.

For the single-pass entry with 12 g maximum-load limit, the allowable corridor was 9 nautical miles and the touchdown dispersion exceeded 2500 nautical miles. A 50-percent deviation in atmospheric density (extreme) reduced the allowable corridor to approximately 4 nautical miles.

An attempt to increase the ballistic entry corridor by relaxing the overshoot limit led to an examination of the characteristics of multipass entry trajectories—deceleration by means of a series of multiple passes through the sensible atmosphere. Extended entry times and extreme range dispersions of these multipass entries considerably overshadow any benefit obtained by expanding the permissible entry corridor. However, the reduced heating rates and reduced total heat load might make this type of entry attractive if the heat shield of the command module were damaged prior to entry (provided the life support systems could function throughout the extrended duration entry).

Saturn C-1 and Service Module Earth-Orbited Payload

Revised C-1 launch-vehicle weights reduced the earth-orbited payloads presented in the April Quarterly Status Report. New trajectories and

performance capabilities were determined based upon the S-I and S-IV stage weights published in MSFC document IN-M-R&VE-VA62-2, "Saturn C-1 Launch Vehicle Design Criteria for Apollo Contractor." Table 8 presents the revised earth-orbited weights for a 100-nautical mile orbit.

Table 8. Earth-Orbited Weights for a 100-Nautical-Mile Orbit

Launch Case	C-1 Only Payload (Lb)	C-1 + Service Module Payload (Lb)
Nominal	20,957	24,033
S-I Engine Out	18,151	21,358
S-IV Engine Out	18,625	20,961

Entry Design Trajectory Analyses

Entry trajectory parametric studies (lunar missions) were initiated as part of an over-all effort to define the final entry design trajectories upon which heat-shield analyses and other systems requirements will be based.

The primary parameters considered in these trajectory studies were the initial entry conditions (corridor), vehicle loading characteristics, and flight mode selection. The study evaluated the effect of these parameters on entry, heating, touchdown position, and entry range.

Restricting the initial entry maneuver to the maximum positive lift-to-drag (L/D) ratio of 0.5, the allowable corridor (single-pass, 10 g), and subsequent entry-trajectory performance parameters were obtained.

Heating characteristics, as a function of entry range and initial entry condition, were defined primarily by the maneuver or flight mode selected after initial entry (supercircular speed regime) and were defined, secondarily by the subcircular speed maneuver limits. In the supercircular speed regime, the heating parameters were bounded by the following flight modes:

1. Maneuvering to maintain constant altitude
2. Maneuvering from an altitude rate command based upon a referenced equilibrium glide line

Depending upon the desired range, both flight modes were terminated at the proper combination of velocity and bank-angle command. For long ranges, both modes resulted in some amount of controlled atmospheric exit. Thus, any errors accumulated during the exit portion of the flight must be corrected during the reentry or terminal maneuver. The range-correction capability during reentry (subcircular speed regime) was bounded by an L/D of 0.5 and an L/D limiting the deceleration to 10 g's. Nominally, the subcircular maneuver was based upon L/D = 0.35.

The trajectory-heating parameters associated with the described supercircular flight mode for the corridor boundaries are illustrated in Figure 21. As the integrated stagnation-point heating load was substantially increased for the referenced equilibrium glide mode, investigation was made to determine how guidance sensing elements were related to flight-mode selection. For this comparison, a nominal entry condition (σE = 6.4 degrees) and entry range values (in excess of 6000 nautical miles) were chosen. The results are summarized in Table 9.

Table 9. Entry Flight Mode Effects on Entry Range, Range Errors, and Heating Parameters

Entry Range (NM)	Flight Mode	1σ Value Terminal Range Errors (NM)	Terminal Correction Capability (NM)	Rep Stag PT Heat Load (Btu/ft^2 sec)	Total Exit Time (Sec)
6,200	Equilibrium reference	-1214/+501	±1000	163,000	140
	Constant altitude	-29/+17	± 500	110,000	920
10,000	Equilibrium reference	-3530/+255	± 950	163,000	1300
	Constant altitude	-129/+39	± 550	110,000	1950

Reference Transearth Trajectory: Lunar injection velocity 8800 fps 62-1/2-hour transit time 60-deg inclination earth-moon plane

Initial Entry Conditions: σ_E = -6.4 deg, V_E = 36,200 fps, h_E = 400,000 ft

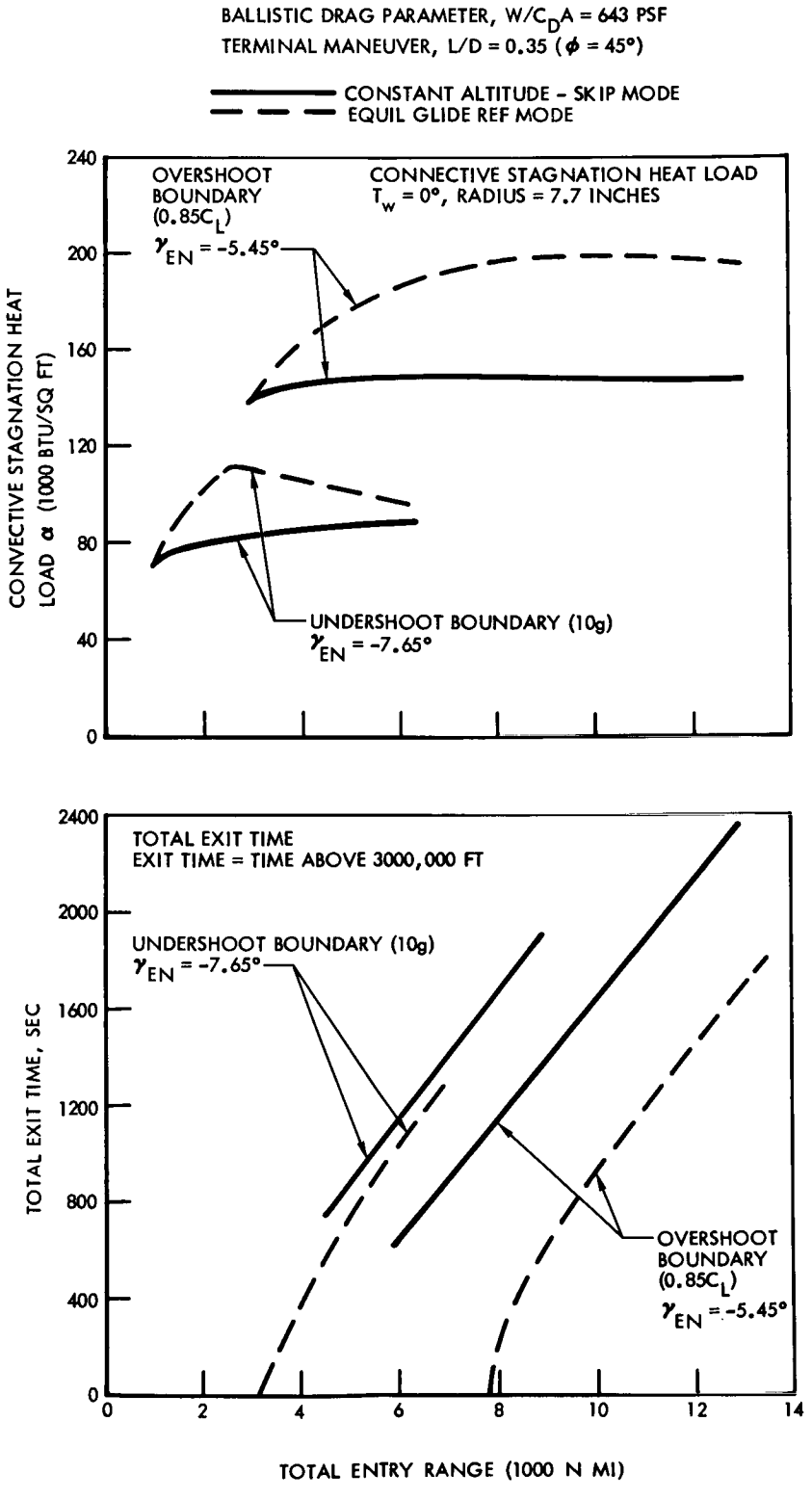

Figure 21. Effects of Entry Corridor and Flight Mode on Heating Parameters

At the exit point in each trajectory (greater than 300,000 feet), the accumulated errors were applied to each nominal trajectory to obtain the terminal-range errors shown. Perfect positive or negative correlation was assumed, depending upon the sign of the actual correlation. The terminal maneuver in all cases was determined by an L/D = 0.35. The terminal correction capability shown is based upon the subcircular maneuver limits previously described.

A transearth trajectory with a lunar injection velocity of 8800 feet per second, a time to perigee of 62.9 hours, and an entry plane inclination of 63 degrees to the plane of the moon's motion were used to estimate trajectory determination uncertainties prior to entry.

Measurements of the angle between a star and the moon or the earth were taken at 1-hour intervals and were processed by a method of maximum-likelihood data reduction procedure. The error in each observation was 10 arc seconds. A first correction of perigee radius, out-of-plane velocity, and time of arrival was made at 10 hours from injection; and a second maneuver, which satisfied the entry corridor limitations of ± 1.5 nautical miles (1σ), was executed at 40 hours. Sampling was continued from 40 to 62.5 hours.

Errors in the ability of the self-contained guidance system to estimate the perifocal-state vector were transformed from perigee to the nominal time of arrival at the entry interface. These inaccuracies, in turn, were used in an investigation of entry-trajectory dispersions, which included the influences of both initial-orbit determination errors and inertial measurement unit (IMU) tolerances. These were negligible in comparison with the propagated effects of the trajectory uncertainties at entry initiation. These data are based upon a near-optimum IMU orientation relative to the entry trajectory, which is approximately 45 degrees from initial horizontal.

AEROTHERMODYNAMICS

Entry Heating

The entry heating analysis used to specify heating rates and loads for the preliminary design of the Apollo command module and for the initial design of the heat shield has been revised. The revision is based upon knowledge obtained in the wind tunnel program, which was accomplished during the past quarter, and upon a more extensive formulation of the heat transfer theories involved. The changes will be discussed in the following four categories.

1. Stagnation Point Heating

The Fay and Riddell[1] method of predicting stagnation-point heating on a hemisphere was selected for predicting the entry face maximum heating rate. The prediction method used to determine heating rates for the heat shield procurement specification employed a radius equal to the corner radius of the command module.

Figure 22 shows a comparison of wind tunnel heating-rate distribution with the predicted heat rates. It is apparent, when one considers the wind tunnel test results that the shape entering at an angle of attack of 33 degrees does not conform with this method. In order to correct the theory, wind tunnel heating data were compared with the theory utilizing wind tunnel conditions. This process was performed with data obtained over the test Mach and Reynolds number range and was extended to obtain an effective radius for the actual flight conditions. Since the wind tunnel conditions were always in the ideal gas range and did not contain a radiation term, it was necessary to define the radiation by the gas condition in the region downstream of the entry shock surface and the volume of this "gas cap." Schlieren pictures of shock surfaces, such as those shown in Figure 23(bow shock at Mach number 6.04), were used together with a modification of Serbin's method [2] of predicting shock displacement to provide a high-speed digital computer formulation of the gas cap volume. Equilibrium radiation and the contribution of non-equilibrium radiation were incorporated into the program.

Through these modifications, the analyses provide a separate evaluation of the convective and radiative heat transfer at the stagnation point.

2. Entry Face Heating

Wind tunnel data provided the basis for indicating convective heating distributions over the entry face. Ratios of local heating

[1] Fay, J. A. and F. R. Riddell. "Theory of Stagnation Point Heat Transfer in Dissociated Air," Journal of Aeronautical Science, Vol. 25, No. 2 (Feb. 1958), 73-85.

[2] Serbin, H. "Supersonic Flow Around Blunt Bodies," Journal of the Aero-Space Sciences (Jan. 1959), 58-59.

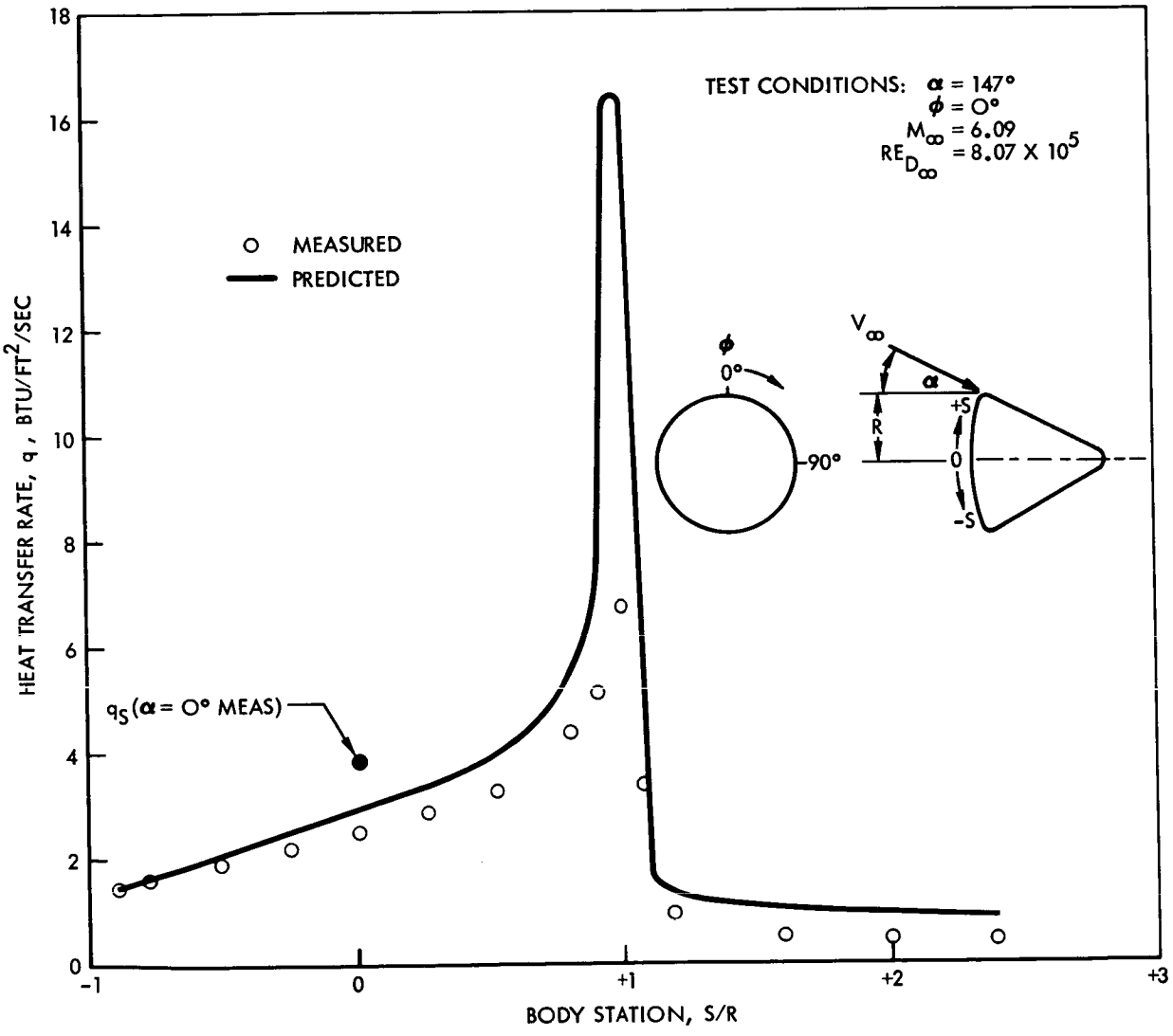

Figure 22. A Comparison of Predicted and Measured Convective Heat Transfer Rates on the JPL Test Model

CONFIDENTIAL

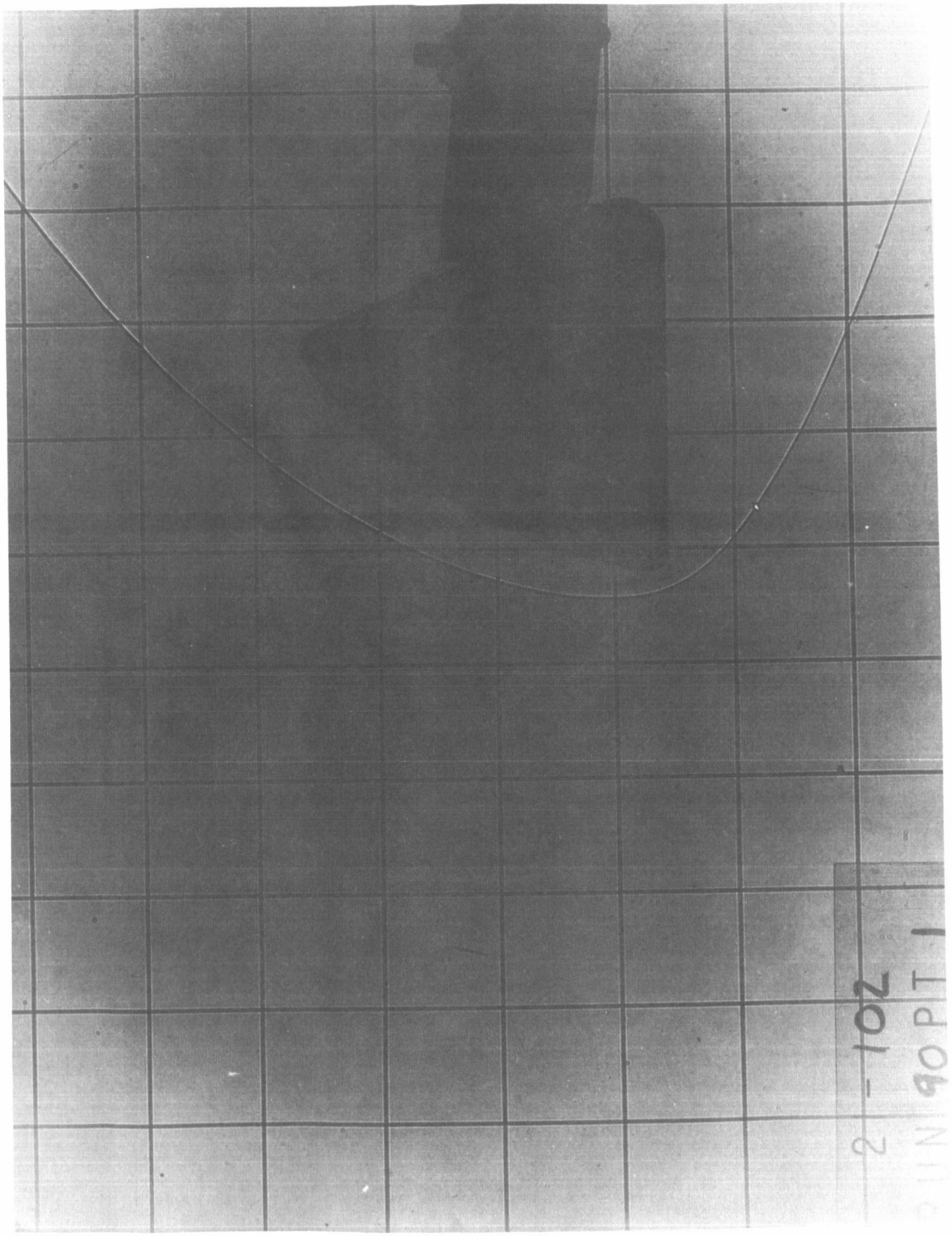

Figure 23. Bow Shock Wave at Mach Number 6.09—JPL Test

CONFIDENTIAL

rates to the maximum heating rate were developed from the data and inserted into the computer program.

The test for laminar or turbulent flow was based on a transition criterion of the Reynolds number of 200,000 calculated from local velocities, densities, viscosities, and distance from the stagnation point.

Where turbulent flow is indicated, the heat transfer will be determined from turbulent flow theory modified by the measured pressure distributions.

Radiative heating was calculated from the definition of the shock surface and the gas cap volume in a fashion similar to that used at the stagnation point.

3. Windward Conical Element Heating

Wind tunnel data essentially verified the method of calculating windward element heating. This method consisted of expanding the flow from the stagnation point, around the small corner, through the sonic point, to the tangent point of the corner and the windward element. From that point on, the heat transfer distribution was obtained from the laminar or turbulent flat-plate theory through use of the reference enthalpy method, wherever applicable, to account for the actual environment. As on the entry face, a Reynolds number transition criterion was used to test for turbulence, and the appropriate method of analysis was used.

Radiative heat transfer to the conical portion of the command module was neglected because the static temperature in the flow field for the major portion of the entry trajectory is below that for which appreciable radiation can be expected.

4. Conical Surface Heating

Wind tunnel heating rate distributions were used for predicting the remaining conical surface heating with the exception of the most leeward portion where model supports invalidated the data. In the most leeward area, heat-transfer rates approximately five times as great as those used in the heat shield specification analysis can be calculated if attached flow is assumed. These rates are unrealistically high because flow separation will occur;

however, heating rates approximately twice those used in the heat shield specification analysis were incorporated into the digital computer program to account for possible reverse flow.

The question of laminar, turbulent, or separated flow on the conical surface will be the object of a more intensive research in the next quarter. Since the whole conical surface is subjected to only 20 percent of the total heat load and the area in which separation may occur represents only about 3 percent, it has not received as intensive an experimental investigation as the entry-face region.

In summary, the entry heating analysis was modified through use of the most recent experimental information and theoretical approaches. Avco, in the role of verifying the heating rates predicted for the heat shield, has indicated that the modifications are in order.

Entry Heating Parametric Study

A series of 17 entry trajectories have been analyzed to determine heating loads by the preliminary design method for the purpose of determining the effect of trajectory on heat shield weight. The trajectories ranged from a 20 g circumlunar entry to an equilibrium glide path trajectory, which imposes the largest possible heat load within the control capabilities of the vehicle. These trajectories are summarized in Table 10.

Ascent Heating

Ascent heating for C-1 and C-5 configurations has been computed by incorporating wind tunnel data showing the effect of the launch escape tower. By assumption of a 4-degree variation in attitude during launch, heating rates of approximately twice those of the preliminary design can be realized on the aft portion of the conical forebody of the command module because of impingement of the launch escape motor bow shock wave. However, the shielding effect of the LES reduces the heating on the forward portion of the conical forebody. These data are discussed in the discussion of wind tunnel test results.

Heating rates to the command module surface by the launch escape motor during abort at altitudes above 35,000 feet have been estimated as having a value of 80 Btu per square foot per second at the apex of the cone and reducing linearly to 30 Btuper square foot per second at the maximum diameter of the command module. These rates will be verified with a future test of launch escape rocket exhaust impingement.

Table 10. Summary of Entry Heating Parameters

Trajectory Number	Entry Velocity (ft/sec)	Entry Altitude (ft)	Entry Angle (deg)	Angle of Attack (deg)	Range (n m)	Duration of Entry (sec)	Max g Load	Stag Pt Max Heat Flux (BTU/ft^3-sec)		Stag Pt Heat Load (BTU/ft^2)	
								T_w = 500°R	T_w = 5000°R	T_w = 500°R	T_w = 5000°R
1	36,080	400,000	-5.3°	33°	5,440	1525	2	467.69	408.16	141,086	114,601
2	36,080	400,000	-7.4°	33°	3,510	1100	10	871.21	759.19	96,333	76,230
3	36,080	400,000	-7.4°	33°	1,157	464	10	871.21	759.19	64,143	50,629
4	36,080	400,000	-10.0°	33°	644	316	20	1139.99	993.38	44,295	34,796
5	26,000	400,000	-6.75°	33°	400	114	20	420.6	336.62	17,338	13,047
6	26,000	400,000	-1.0°	33°	7,170	2000	1.8	95.53	74.46	84,697	65,037
10B	36,080	400,000	-6.4°	33°	5,938	1500	10.9	702.9	610.6	76,139	62,819
9	36,080	400,000	-6.4°	33°	2,622	810	5.8	618.0	535.96	105,009	76,325
10	36,080	400,000	-6.4°	33°	3,645	1080	5.8	603.4	522.56	86,441	69,089
11	36,080	400,000	-6.4°	33°	5,329	1500	5.8	602.9	521.24	83,108	66,532
12	36,080	400,000	-6.4°	33°	6,534	1800	5.8	652.3	566.76	86,504	69,606
13	36,080	400,000	-6.4°	33°	9,540	2600	5.8	611.7	530.35	84,684	67,735
14	36,200	400,000	-5.34°	33°	11,271	2900	1.9	504.9	440.6	202,000	165,599
15	36,200	400,000	-7.65°	33°	4,922	1450	10.0	975.3	845.1	104,954	86,543
16	36,200	400,000	-7.65°	33°	8,257	320	10.0	981.7	850.7	61,884	50,138
17	36,200	400,000	-6.4°	33°	6,263	1560	11.2	791.8 297.9	680.0 234.0	89,769	74,149

NOTES

a) Trajectory 4 has been withdrawn from design considerations because of the severe thermal environment the command module would experience during reentry.

b) The entry analysis unit may have a new numerical designation for trajectory 10B.

c) Trajectories 10B, 9, 10, 11, 12, and 13 are of the skip out mode.

[redacted]

Reaction Control System (RCS) Rocket Heating

The heating rates of inoperative RCS rocket engines during entry have been estimated. A combination of the theoretical and the experimental approaches to the problem of surface discontinuities shows that heating rates at the secondary stagnation point on the trailing edge of a cavity in the surface, such as is found on the RCS engine, can be twice the heating on the undisturbed surface. The heating within the hole resulting from recirculation was considered to vary in the analysis in a manner consistent with turbulent flat-plate theory. Circumferentially, the heating was reduced to the undisturbed surface rate at a point 90 degrees forward of the trailing edge and maintained at the rate to the leading edge. A test program is being performed on a series of nozzle configurations in which the effect of nozzle fairing radius, nozzle exit angle, boundary layer depth, and nozzle alignments will be investigated for Mach number 3.0 flow by using a thin-skin heat transfer model.

The heating rate of the service module surface by the firing of the RCS motors has been estimated from rocket plume data. Heating rates of about 11 Btu per square foot per second may be expected. Since very few test data are available to aid in firing under space conditions, a test will be run to determine the plume configuration and the resulting heat transfer under simulated space conditions.

HEAT TRANSFER ANALYSIS

Launch Escape System (LES)

Boost-heating studies were completed of the LES nose cone tower-jettison-motor casing and skirt. The analyses considered no thermal protection and no rocket firing. The maximum expected temperature for the various components are presented in the following listing:

Component	Thickness (inches)	Temperature (F)
Nose cone	0.08	1800
Tower jettison motor	0.155	264
LES rocket casing	0.219	140
Skirt	0.188	561

As a result of this study, the design of the LES components has changed. The nose-cone thickness in the area of the stagnation point has been increased from 0.08 inches to 0.18 inches, and the skirt is now coated with a thermal-protection material. Studies are in progress to account for the design changes and the effect of rocket firings and to determine thermal-protection requirements.

In the event of an abort during boost the LES tower will be subjected to both aerodynamic and rocket exhaust heating. A multislab, one dimensional, transient heat-flow analysis, with ablation of the outer slab, was used to predict the thickness requirements for each of two ablative materials for a given back-face temperature. Preliminary estimates for the case of no-particle impingement from the escape rocket exhaust are shown in Figure 24.

The effect of particle impingement on the ablation rates of ablative materials is unknown. Therefore a testing program has been initiated from which sufficient data should be obtained to predict the required weight of ablative material more accurately.

Command Module

The maximum heat input to the command module antenna dome during the boost and reentry phases is shown in Figures 25, 26, and 27. The heat input to the dome when the abort rockets are fired during the boost phase was not considered. During reentry, the maximum heating rate and total heat input at the tangent point (location 4 of Figure 25) will decrease

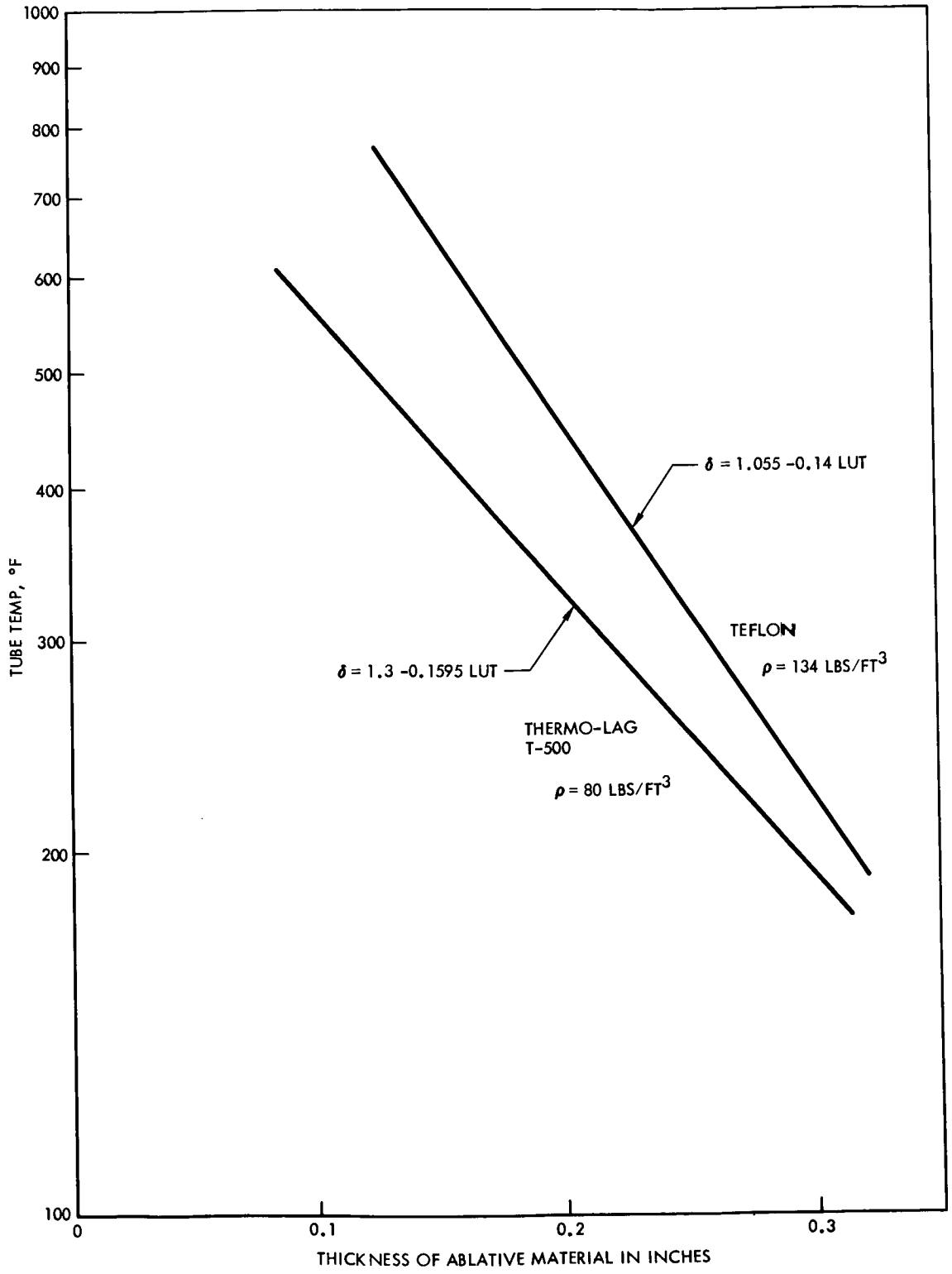

Figure 24. A Preliminary Estimate of Escape Tower Truss Member Temperature as Function of Ablative Thickness for No-Exhaust Particle Impingement

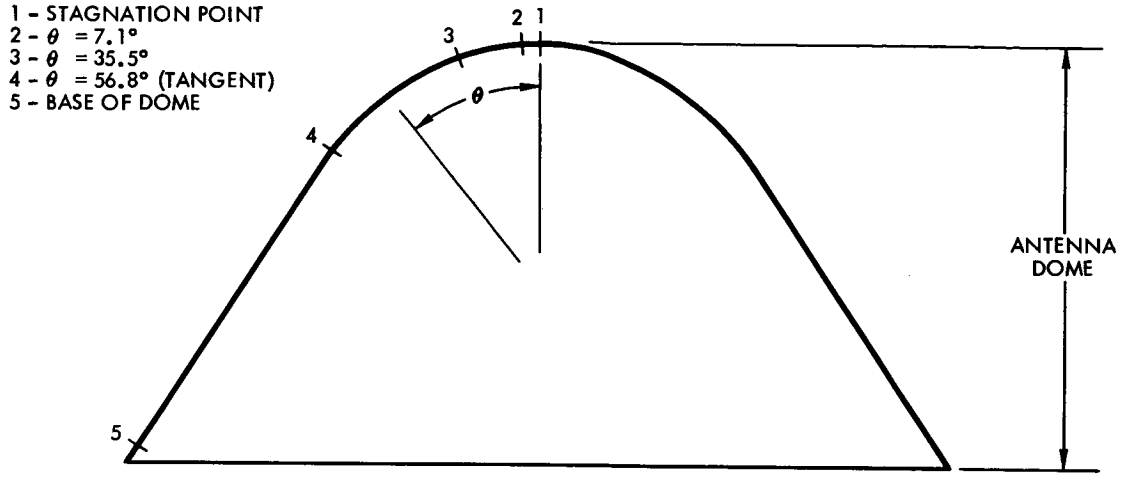

MAXIMUM HEATING RATE DURING THE BOOST PHASE

LOCATION	HEATING RATE (BTU/FT^2 - SEC)	DURATION (SEC)	BOOST TIME (SEC)
1	4.5	5	150
2	2.4	10	110
3	5.0	10	110
4	3.5	10	110
5	2.6	10	110

NOTE: $q_{\textcircled{1}}$ AT 110 SEC = 2.6 BTU/FT^2 - SEC

TOTAL HEAT INPUT DURING THE BOOST PHASE

LOCATION	HEAT INPUT BTU/FT^2
1	218
2	131
3	262
4	195
5	165

Figure 25. Heating of Antenna Dome During Boost Trajectory

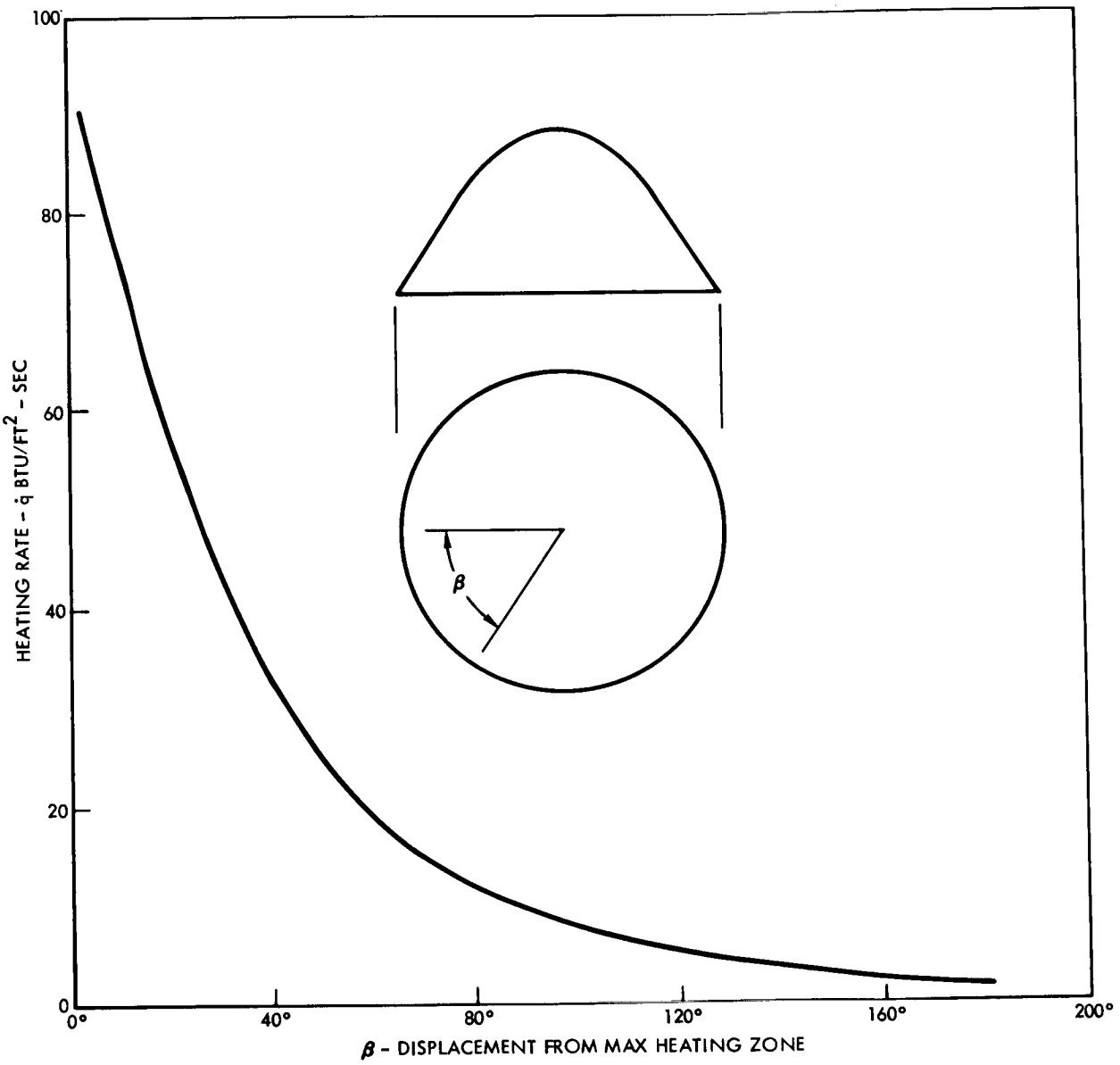

Figure 26. Maximum Heating Rate at Base of Antenna Dome—60 Seconds After Start of Reentry

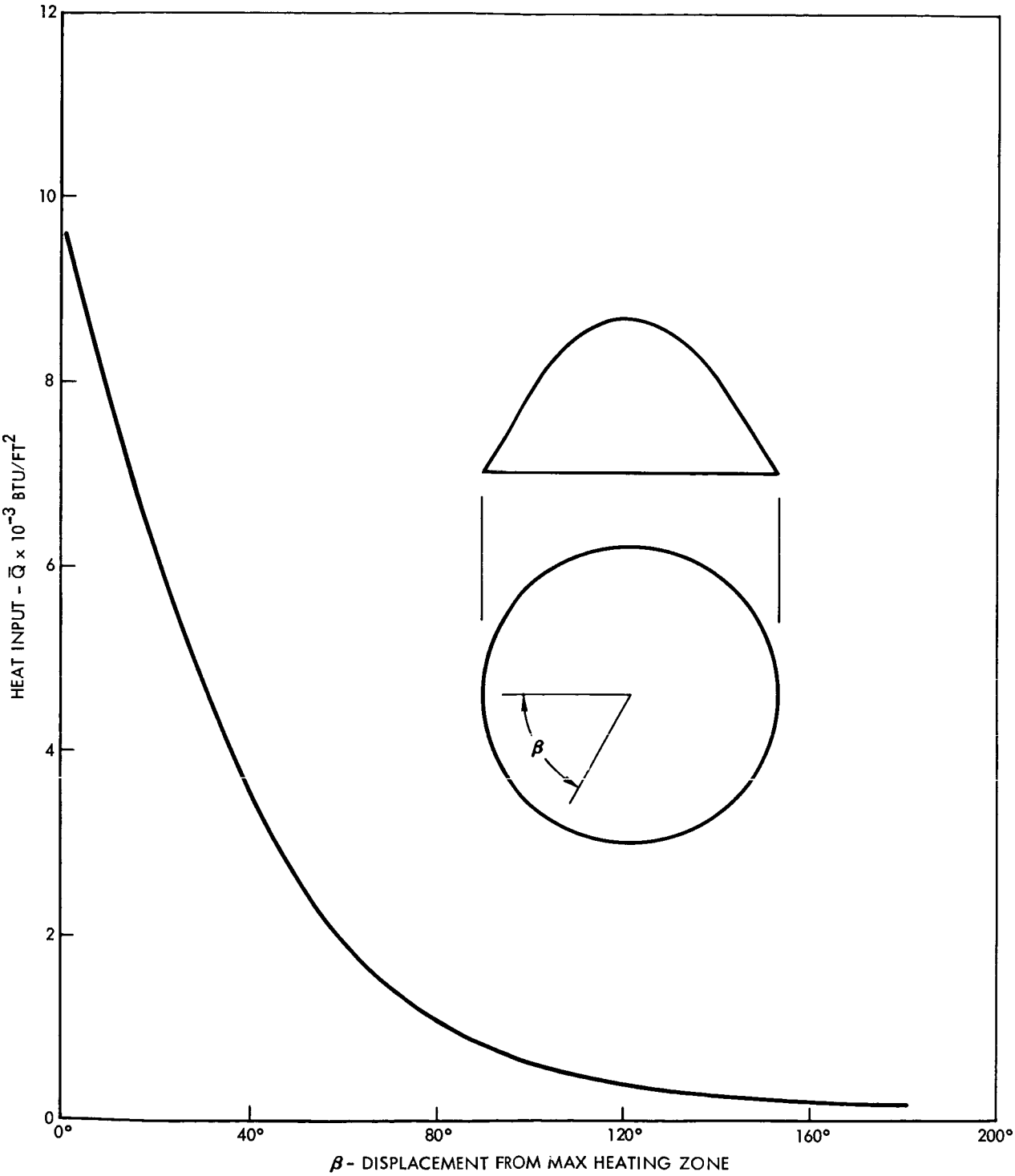

Figure 27. Total Heat Input at Base of Antenna Dome During Reentry

approximately 15 percent from the values determined at the base if the base of the dome. During reentry, the maximum temperature on the dome is near the base. This temperature is expected to vary from 3112 F (for an emissivity of 0.4) to 2590 F (for an emissivity of 0.8). These temperatures were determined for radiation equilibrium considering a 20-percent surface temperature decrease due to the material thermal conductivity.

The following materials will be evaluated for the antenna dome:

1. Silicone laminate reinforced with quartz fabric
2. Teflon reinforced with ceramic fibers
3. Phenolic laminate reinforced with E-glass fabric
4. Fused silica

Preliminary predictions of the command module heat loads and temperatures were made for several normal and abnormal space operational conditions. A transient two-dimensional heat transfer analysis of a simplified model was used for these calculations. The solar, lunar, and earth heat transfer rates to the command module were determined from a three-dimensional analysis as discussed in SID-62-313. The following conditions were assumed for both the normal and abnormal cases:

1. The command module is composed of twelve longitudinal conical segments.
2. No heat is transferred circumferentially about the command module (i.e., each conical segment may be considered independently of the others).
3. The temperature on the inside surface of the command module structure is approximately equal to the cabin environmental temperature of 75 F.
4. The apex of the command module is directed at the sun during the translunar flight.
5. The longitudinal axis of the command module is parallel to the lunar surface during lunar-orbit flight.
6. During the lunar-stay mission, the command module is located at the equatorial plane in a vertical position.

7. The surface of the command module is coated with a paint (white silicon with 30-percent ZnS pigment by volume) having an absorptivity of 0.35 and emissivity of 0.75.

The calculated surface temperatures and internal heat loads for normal operational conditions with the command module cabin maintained at 75 F are shown in Table 11.

Table 11. Cabin Wall Temperature Due to Pressure Failure

Mission	Hours After Pressure Failure	Cabin Wall Temp (F)
Translunar	24 (apparent steady-state)	45 to 60
Lunar stay subsolar (day)	18 (apparent steady-state)	100 to 120
Lunar night	12	10 to 30
Lunar night	24	-20 to -40

Service Module

A parametric study of the temperature history of the service module structure and components was initiated. On the basic structural configuration used in the study is a two-dimensional model upon which can be superimposed representations of detailed design modifications can be imposed, so that the thermal role of service module components can be determined. A sketch of this configuration is shown in Figure 28.

The component thermal properties utilized in the analysis are those found in the literature, with the exception of the absorptivity and emissivity of aluminum. These properties were assumed to be 0.3 and 0.4 respectively. In addition, two other assumptions were made.

1. The service module is shielded from the sun by the command module during all translunar flights.

2. All heat loss from the service module is by radiation from the outer surface (i.e., radiator deployment was not considered).

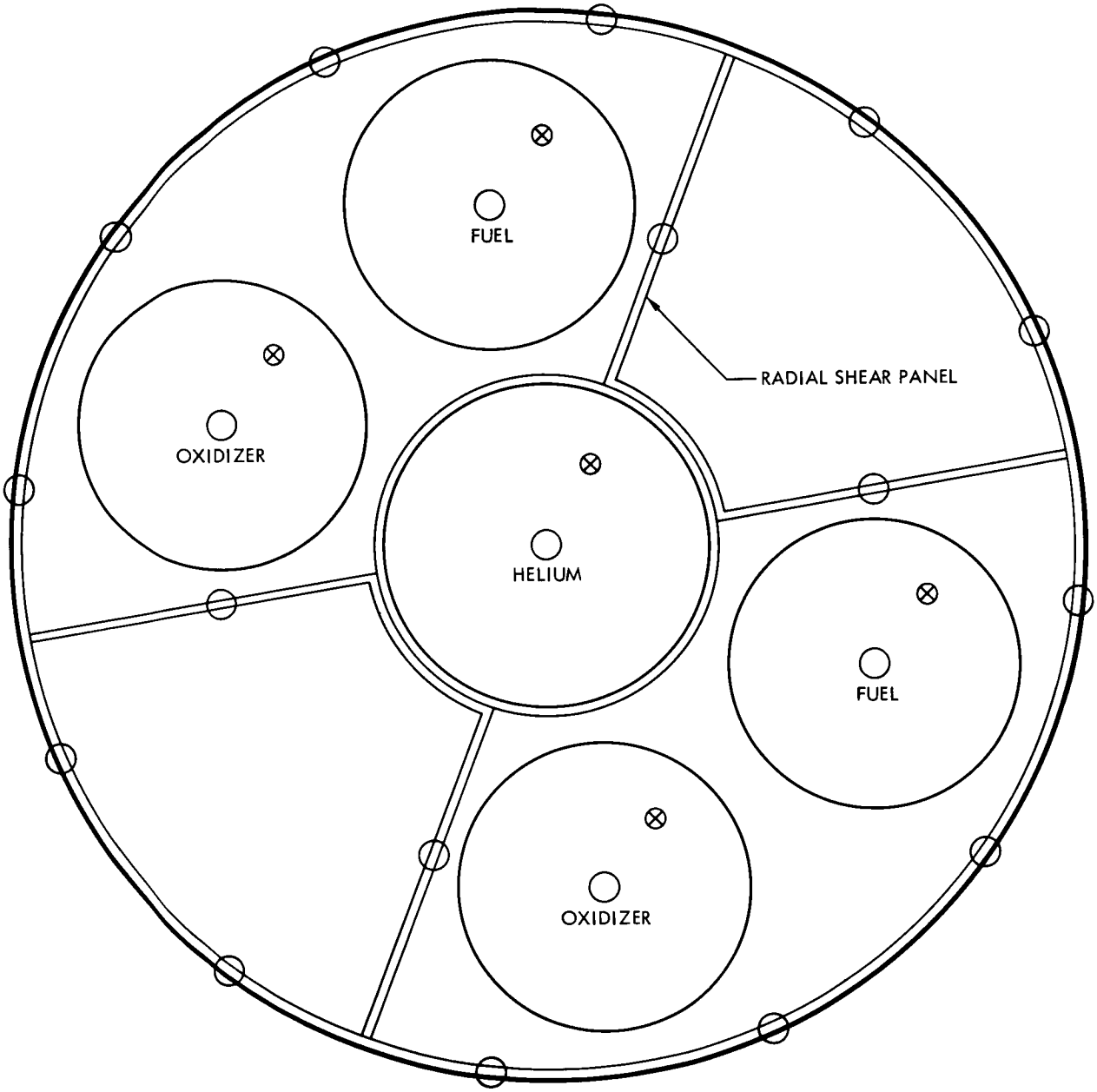

Figure 28. Schematic Diagram of Service Module Components

For purposes of analysis the Apollo mission was divided into the following five phases:

1. Translunar
2. Lunar orbit, entry
3. Lunar stay (day or night)
4. Lunar orbit, exit
5. Transearth phases

The initial component temperature history study was made for the translunar and lunar night missions. The primary objective of this study was to determine component temperatures for the different thicknesses of superinsulation materials applied to the external surface of the propellant tanks. The results of this study are shown in Tables 12, 13, 14, and 15.

Table 12. Minimum Expected Temperatures (F) for Various Insulation Thicknesses* (Translunar Mission)

Insulation Thickness (inches)	External Surface	Temperature (F)			
		Fuel	Oxidizer	Helium	Radial Shear Panel
0	-64	52	48	20	2
0.1	-69	56	51	14	-5
0.2	-73	59	55	10	-10
0.4	-77	63	60	5	-16
0.6	-80	65	62	2	-19
0.8	-83	67	64	1	-22

*Insulation, K = 3×10^{-5} Btu/hr-ft-°F

Table 13. Minimum Expected Temperatures (F) for Various Insulation Thicknesses* (Lunar Night Mission)

Insulation Thickness (inches)	External Surface	Temperature (F)			
		Fuel	Oxidizer	Helium	Radial Shear Panel
0	-89	18	12	-15	-31
0.1	-93	22	13	-21	-37
0.2	-97	27	18	-25	-41
0.4	-103	36	26	-33	-49
0.6	-107	41	32	-39	-55
0.8	-111	46	37	-44	-60

*Insulation, K = 3×10^{-5} Btu/hr-ft-°F

Table 14. Minimum Expected Temperatures (F) for Various Insulation Thicknesses* (Translunar Mission)

Insulation Thickness (inches)	External Surface	Temperature (F)			
		Fuel	Oxidizer	Helium	Radial Shear Panel
0	-64	52	48	20	2
0.1	-89	70	70	-7	-32
0.2	-90	70	70	-8	-33
0.4	-90	70	70	-8	-34
0.6	-90	70	70	-8	-34
0.8	-90	70	70	-8	-34

*Insulation, K = 3×10^{-5} Btu/hr-ft-°F

Table 15. Minimum Expected Temperatures (F) for Various Insulation Thicknesses* (Lunar Night Mission)

Insulation Thickness (inches)	External Surface	Temperature (F)			
		Fuel	Oxidizer	Helium	Radial Shear Panel
0	-89	18	12	-15	-31
0.1	-139	70	70	-78	-97
0.2	-142	70	70	-82	-101
0.4	-144	70	70	-84	-104
0.6	-145	70	70	-85	-104
0.8	-145	70	70	-85	-104

*Insulation, K = 3×10^{-5} Btu/hr-ft-°F

ENVIRONMENTAL CONTROL SYSTEMS (ECS) ANALYSIS

Crew Support

A pressure drop versus flow analysis for the waste management system was conducted to determine air flow through the storage areas, vacuum cleaner requirements, and exhaust blower requirements.

Ventilation of the storage areas for food, personal hygiene equipment, and refuse is provided by the suction pressure produced by the suit circuit compressor of the ECS. It was assumed that there should be a minimum of 10 air changes per hour with a 75-percent occupancy of the storage volumes. Figure 29 shows the flow rate through each area when a 1/4-inch-outer-diameter line is connected to the ECS return system. The flows shown exceed the assumed requirements.

As shown in Figure 29, the exhaust blower must satisfy the requirements of fecal system, urine system and vacuum cleaner. Since the combined fecal and urinal requires 3.25 cubic feet per minute, and the vacuum cleaner requires 5.0 cubic feet of air per minute, the exhaust blower capacity is established by the vacuum cleaner.

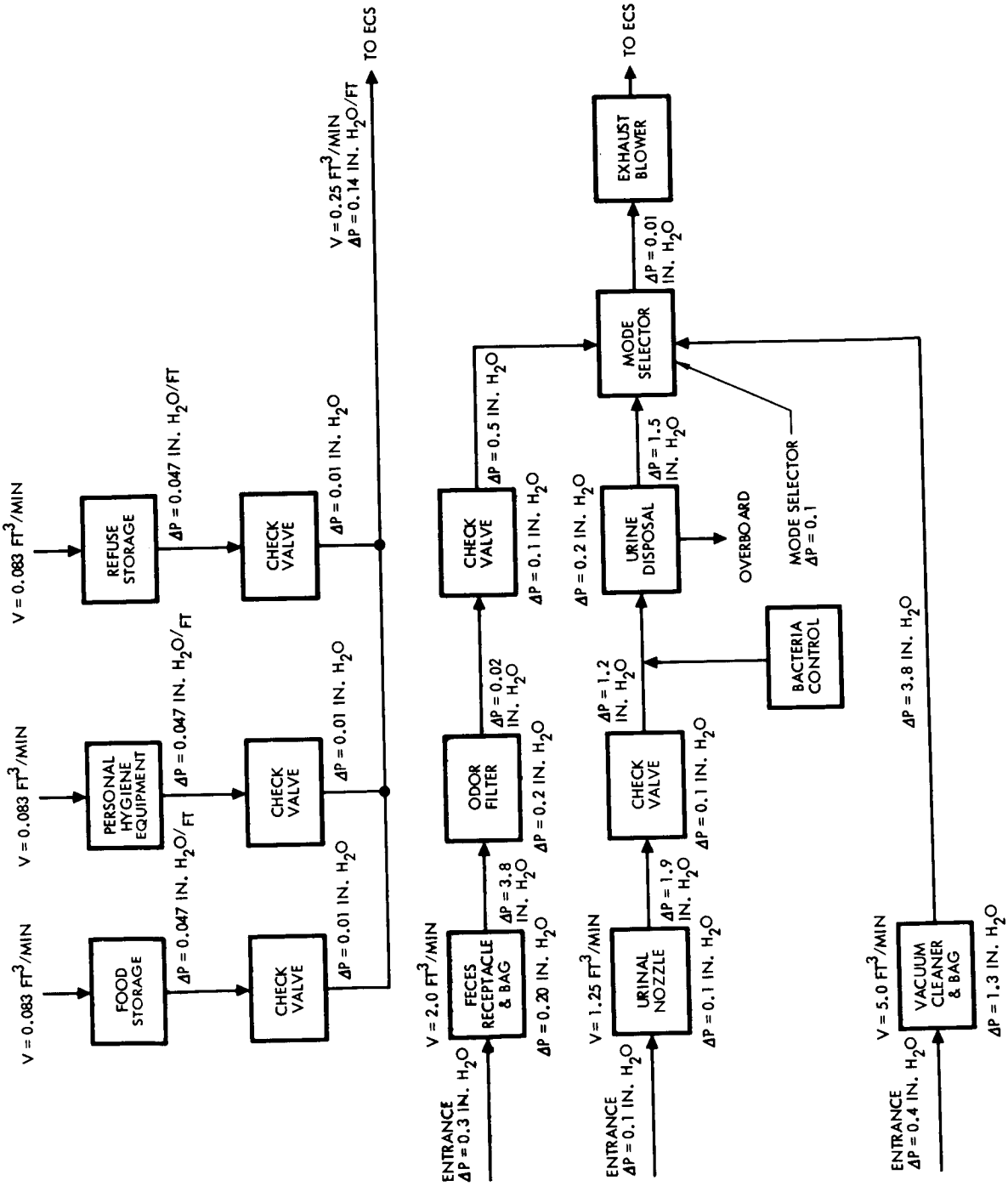

Figure 29. Flow Diagram

Storage of fecal material at the normal compartment pressure could cause a release of gases into the compartment if the storage bags rupture under an emergency condition of compartment decompression.

Volume of gases produced as a result of the decomposition of stored organic waste was estimated from data reproduced from "Sewage Treatment" by Imhoff and Fair. This analysis indicated that a plastic bag of 10 mils thickness would contain the calculated volume of gas during decompression.

Temperature (F)	50	59	68	77	86
Gas produced daily as percentage of gas remaining to be produced at beginning of day.	4.3	6.0	8.4	11.7	16.4
Ultimate gas production in liters per kilogram of volatile matter	450	530	510	710	760

The cooling water used on the lunar-landing mission (Figure 29) was calculated based on maintaining 200 pounds per hour glycol flow rate to the electrical load at 70 F and to the suit circuit at 45 F. For emergency conditions, the suit circuit heat load was taken to be 2900 Btu per hour; and the increased condensate produced was assumed to be offset by increased potable water consumed.

Both lunar landing and lunar orbit plots (Figures 30 and 31) were based on normal operation of three fuel cells.

Unmanned Spacecraft

The internal cooling analysis of the unmanned test vehicles was influenced by the mission concepts, test site, limitations, and boost vehicle requirements. The pad abort and maximum q vehicles (boilerplate 6, 12, 20, and 21), will be launched at the White Sands Missile Range with limited facilities. Due to the blast area of the solid propellants for the LES and Little Joe, an equipment-free area of 200 feet radius from the vehicle is required. This restricts use of GSE cooling. A 2-hour combined closeout and holdout period is necessary without GSE attached. Internal systems are required to operate through the landing phase.

Figure 32 compares internal temperatures immediately prior to launch to MIL-E-5400 temperature limits with no cooling supplied during the closeout and holdout period.

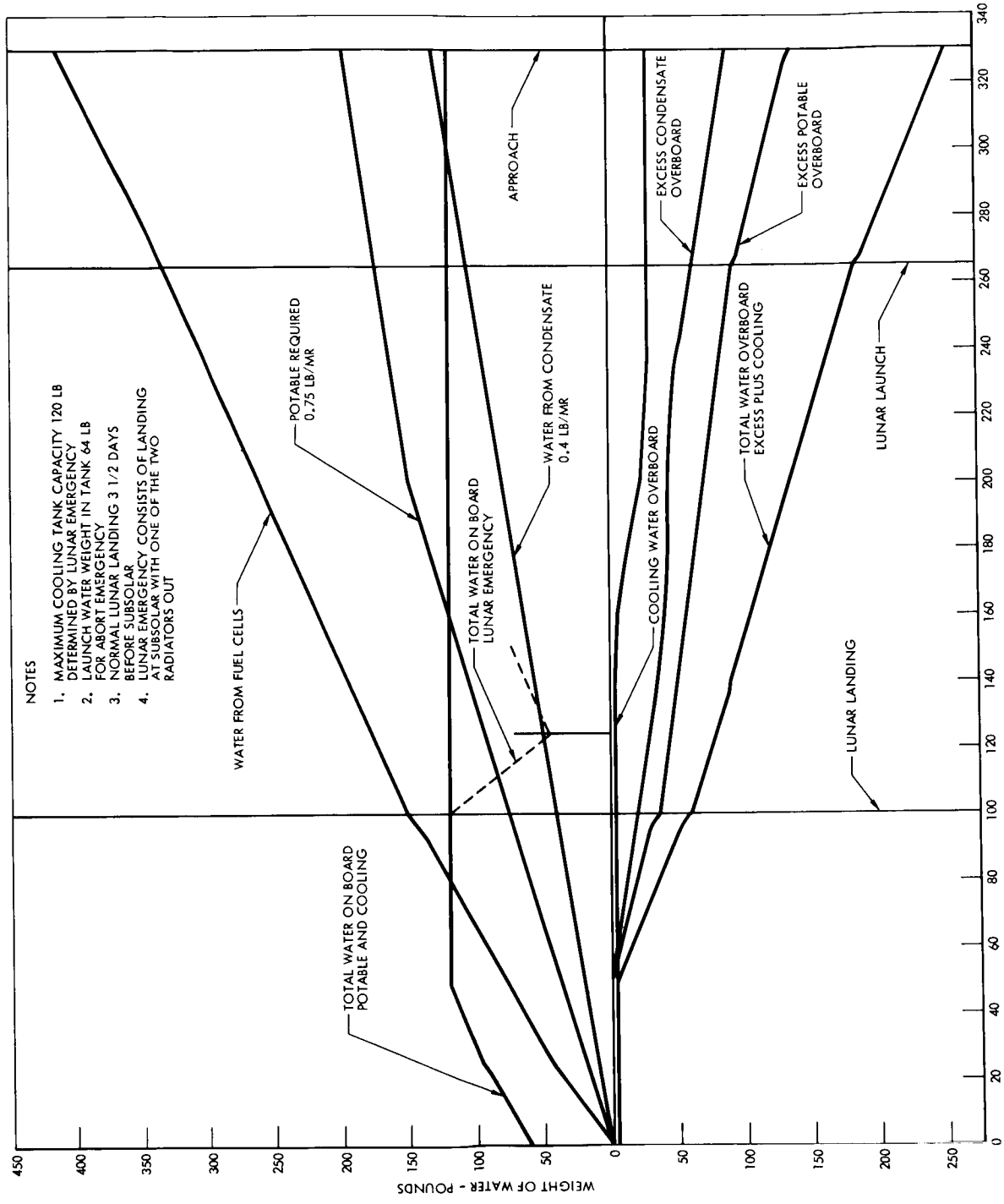

Figure 30. Water Quantity Time History—Lunar Landing Mission

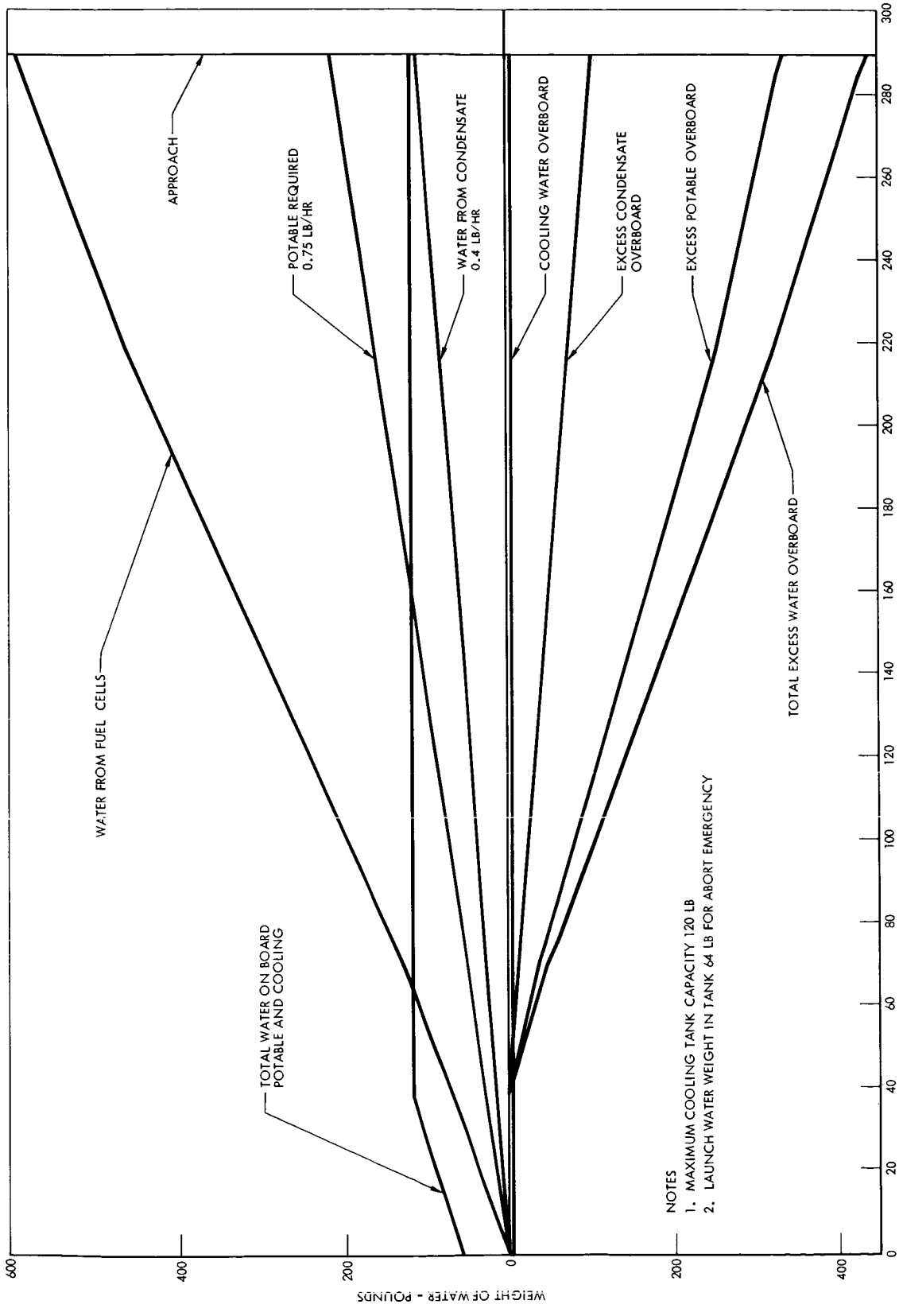

Figure 31. Water Quantity Time History—Lunar Orbit Mission

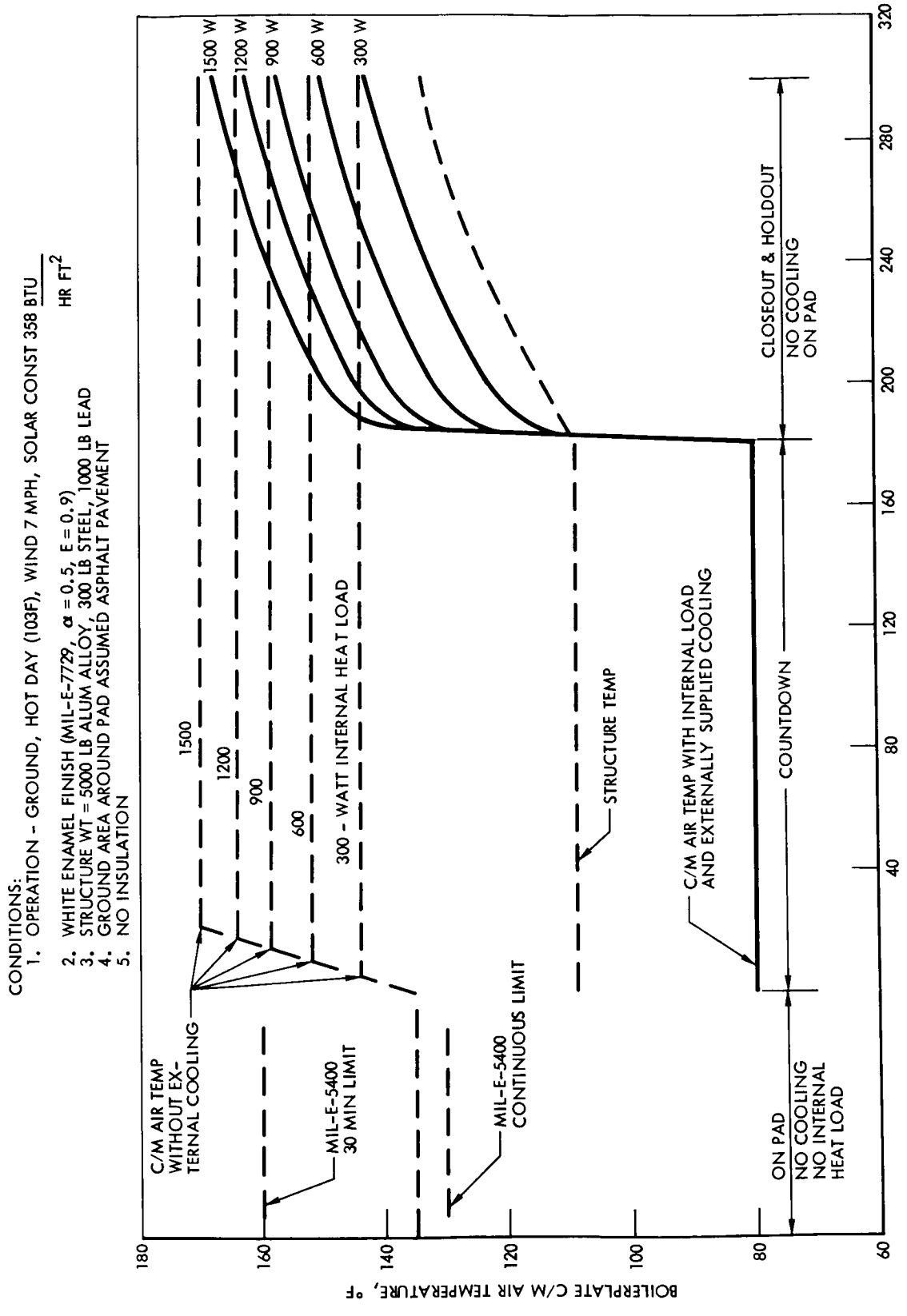

Figure 32. Boilerplate Internal Temperatures During Prelaunch

Based on the data presented in Figure 32, it was concluded that an on-board cooling system would be required. Cooling concepts investigated are summarized in Table 13. The system described schematically in Figure 33 was determined to best satisfy the basic mission concepts and objectives.

The proposed system, using precooled glycol as a heat sink, will maintain internal temperatures below 160 F throughout the closeout, holdout, and flight phases. Overall system weight is estimated at 400 pounds including insulation for a cooling capacity of 2000 watts.

Orbital boilerplate 13, 15, 16, and 18 will be launched at the AMR facilities using the C-1 booster. Since operational concepts of the orbital vehicles vary considerably from the pad abort and maximum q vehicles and are scheduled at a later time, only preliminary studies have been made.

Atmospheric Composition and Control

A computer program has been prepared to assist in the analysis of suit circuit system performance under steady-state conditions. By supplying metabolic loads, cabin pressure, temperature, number of crew in suit circuit, desired flow, and desired suit inlet temperatures as inputs, the program computes flow rate, pressure drop, humidity, and temperature at the inlet and outlet of each major component. It also computes fan power, load on the liquid coolant loop (or water boiler), amount of water separated, metabolic oxygen requirements and carbon dioxide production. Check runs have been made to prove the program. The hand-calculated flow charts, (shown in Figure 34, Sheets 1 through 6) show basic system parameters throughout the suit circuit. These charts do not reflect latest compressor performance, which will increase the flow rate at the 3.5 psia and 14.7 psia conditions. The increased flow rates do not appreciably effect the temperatures, pressures, and humidities shown. The revised performance of the suit circuit compressor is shown in Figure 35, Sheets 1 and 2. The volumetric output varies with system pressure requiring higher torque at the greater densities. A built-in slippage results from the higher torque values providing for a small, light-weight unit. Power requirements vary with flow rate. The revised suit compressor performance will be incorporated in the computer program.

Figure 36 presents carbon dioxide production and oxygen consumption versus metabolic rate in Btu per minute for the metabolic rate range 400 to 800 Btu per minute.

A program has been started to control noxious gas production resulting from outgassing of structural materials. The procedure involved is as follows:

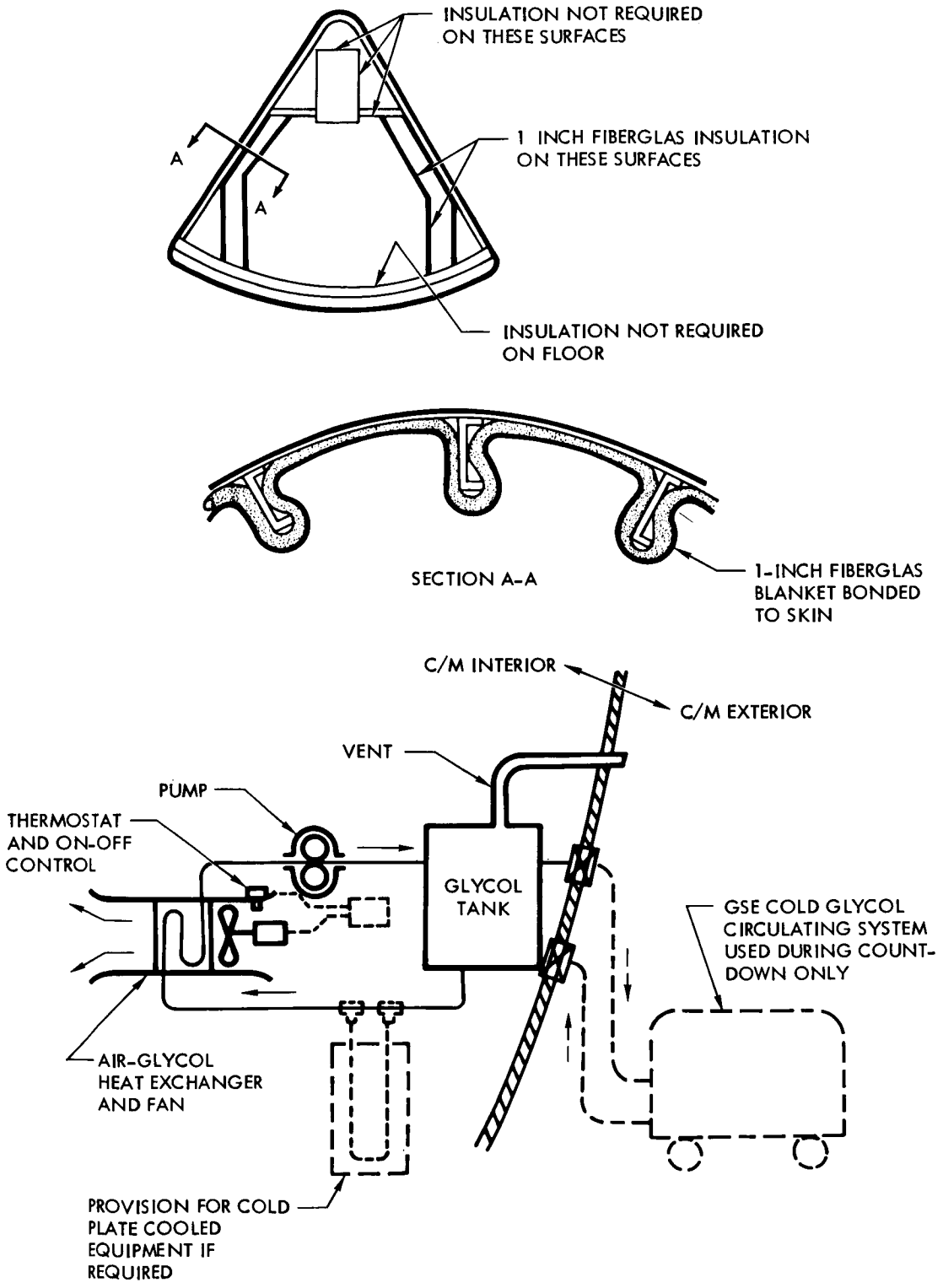

Figure 33. Cooling System for Unmanned Spacecraft

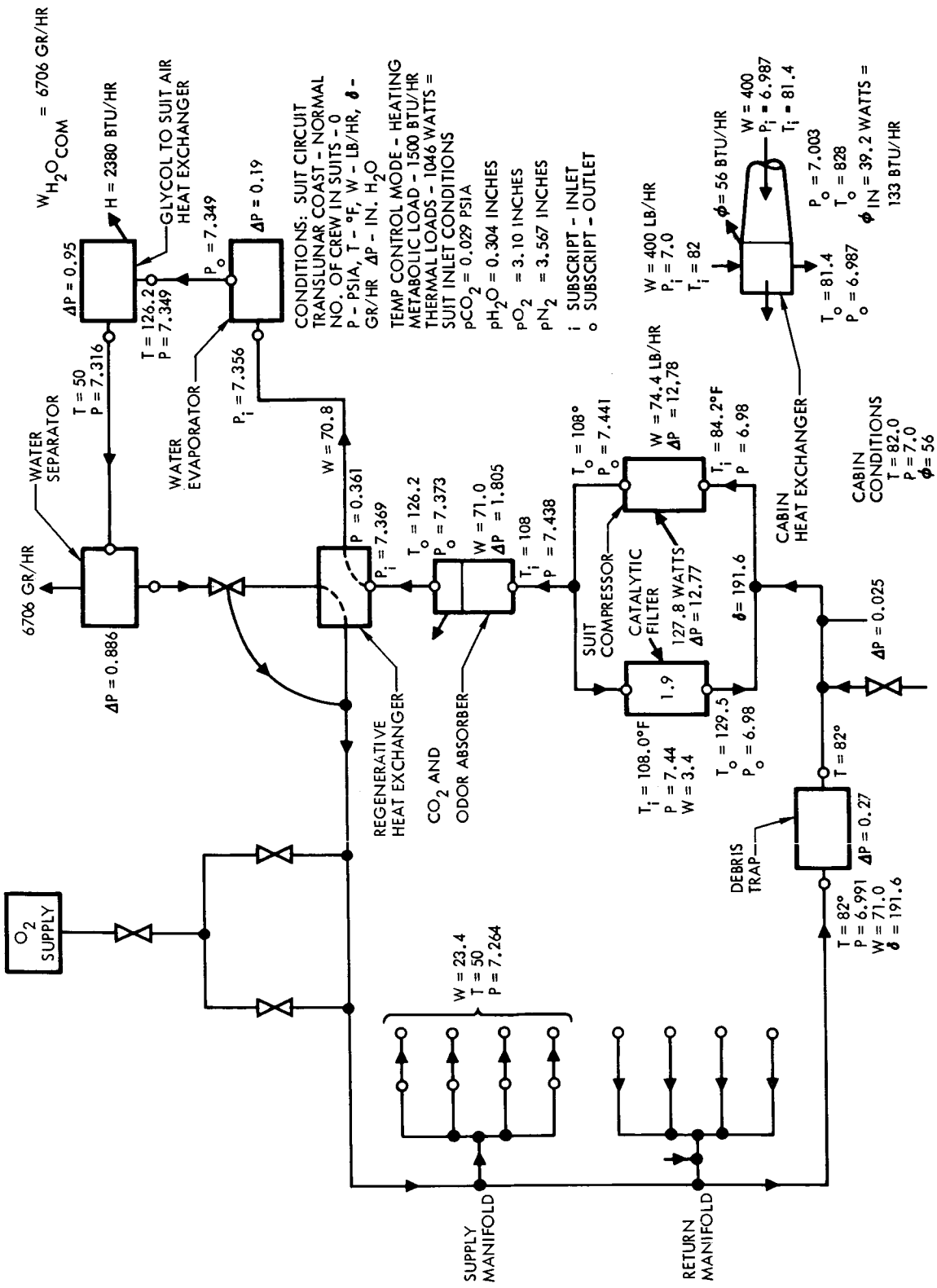

Figure 34. Suit Circuit Conditions (Sheet 1 of 6)

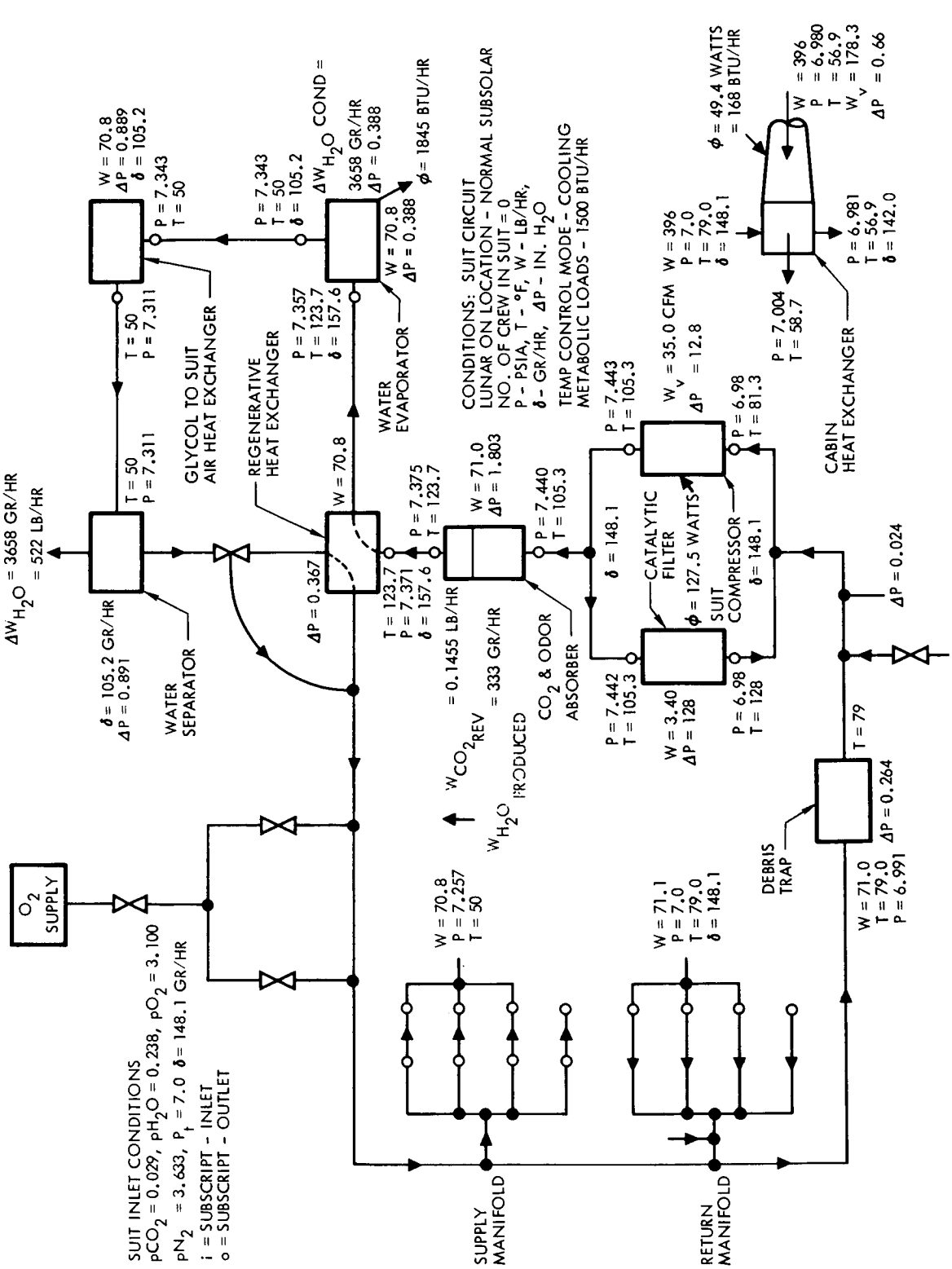

Figure 34. Suit Circuit Conditions (Sheet 2 of 6)

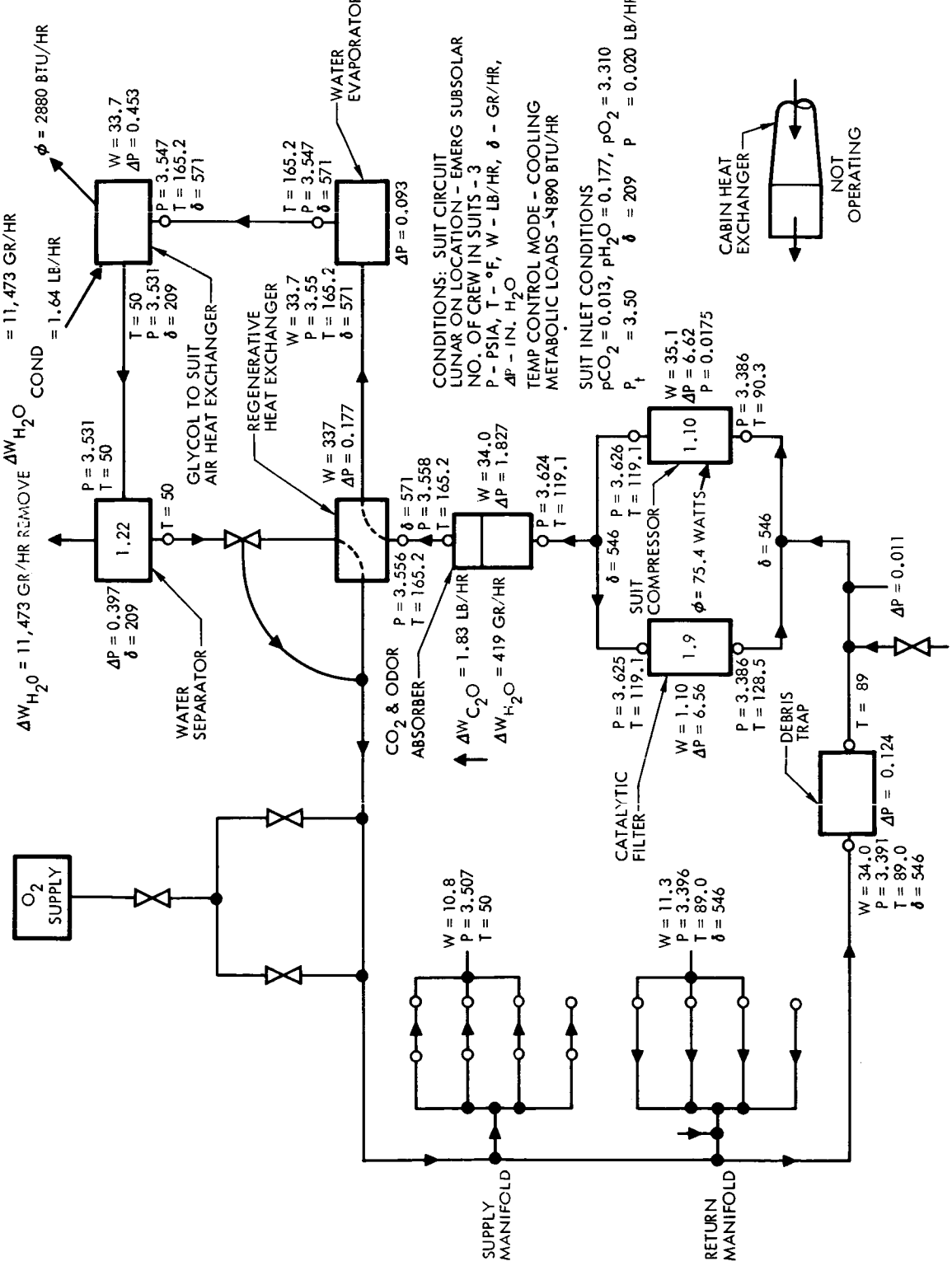

Figure 34. Suit Circuit Conditions (Sheet 3 of 6)

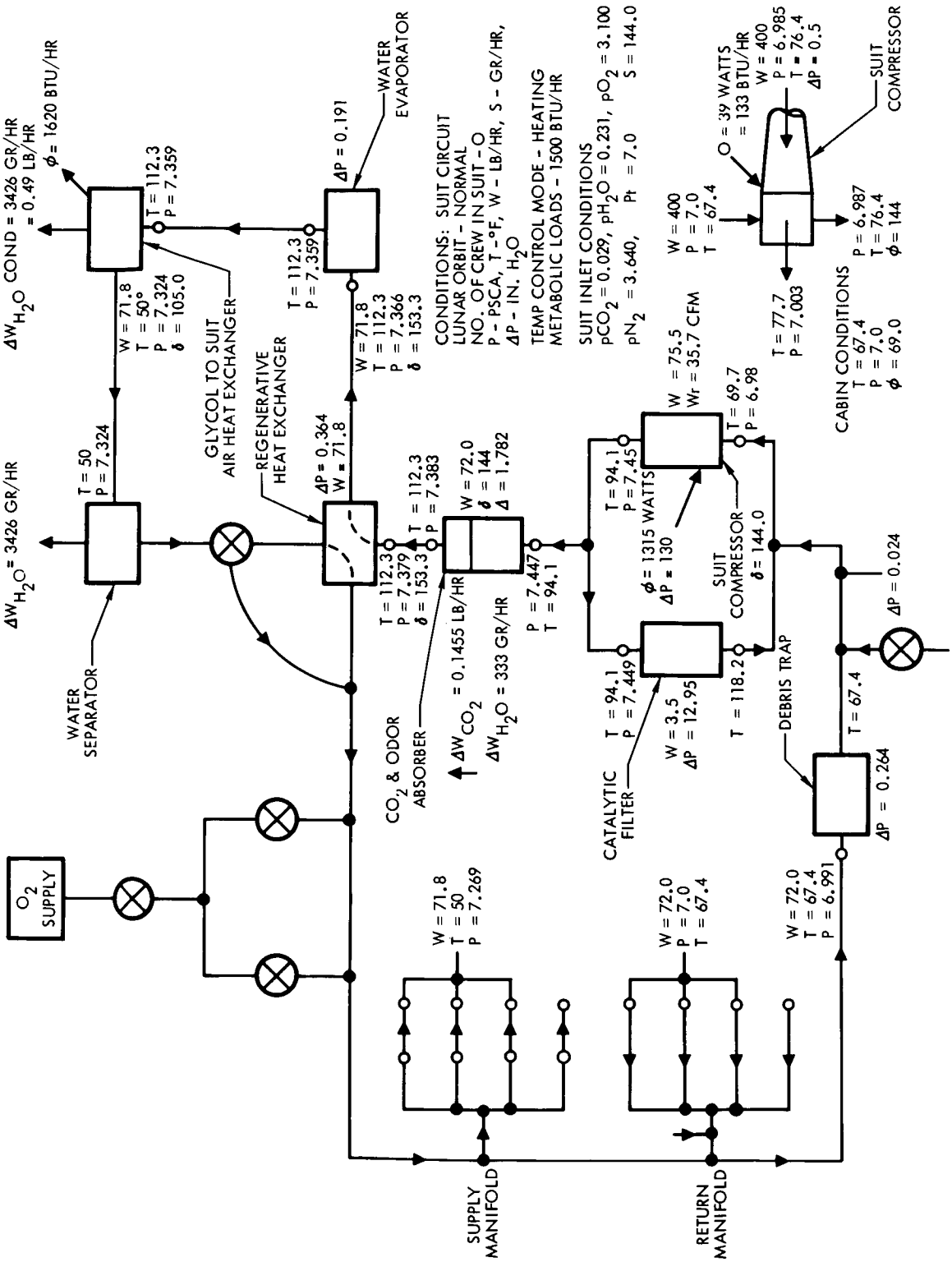

Figure 34. Suit Circuit Conditions (Sheet 4 of 6)

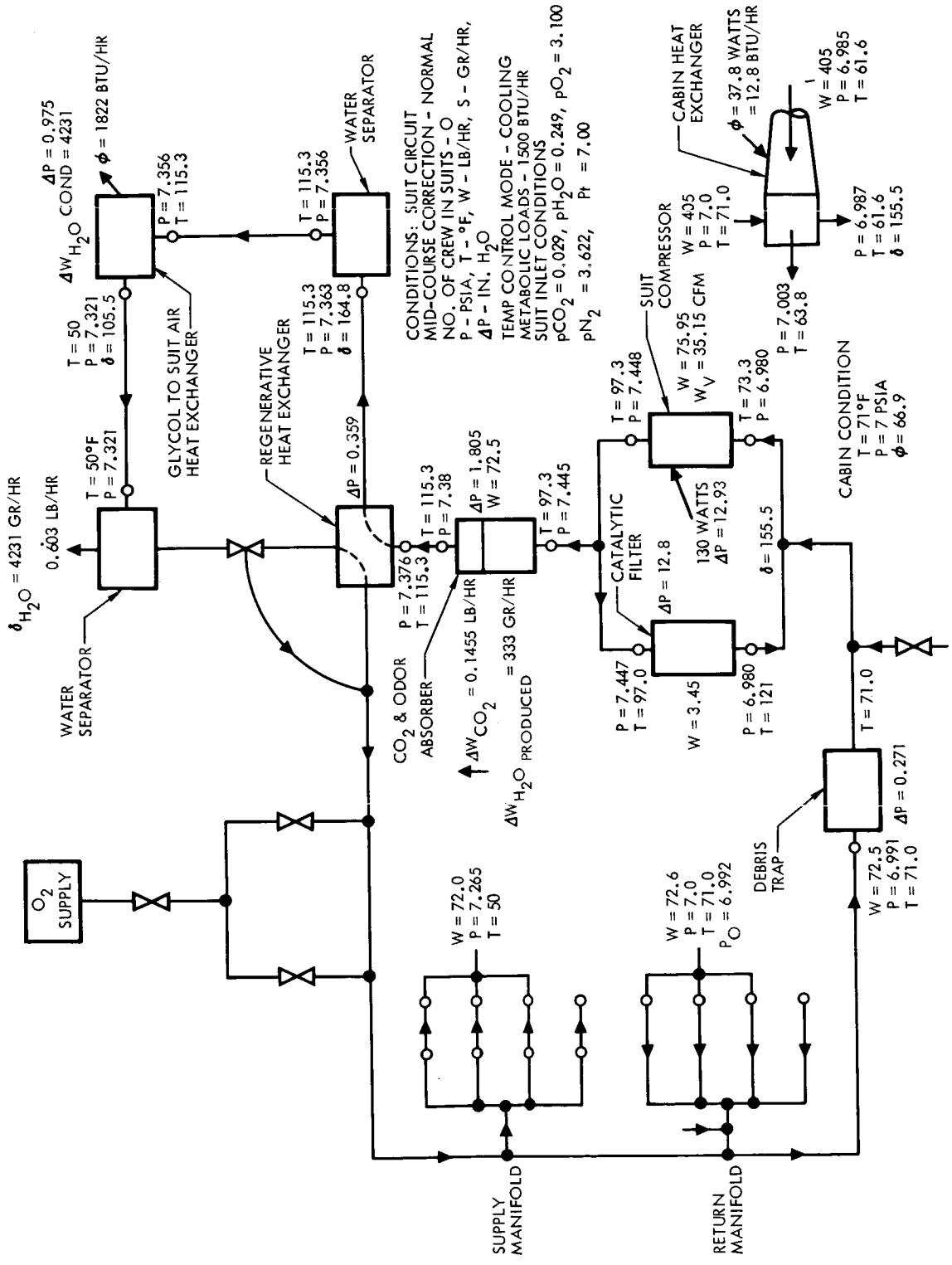

Figure 34. Suit Circuit Conditions (Sheet 5 of 6)

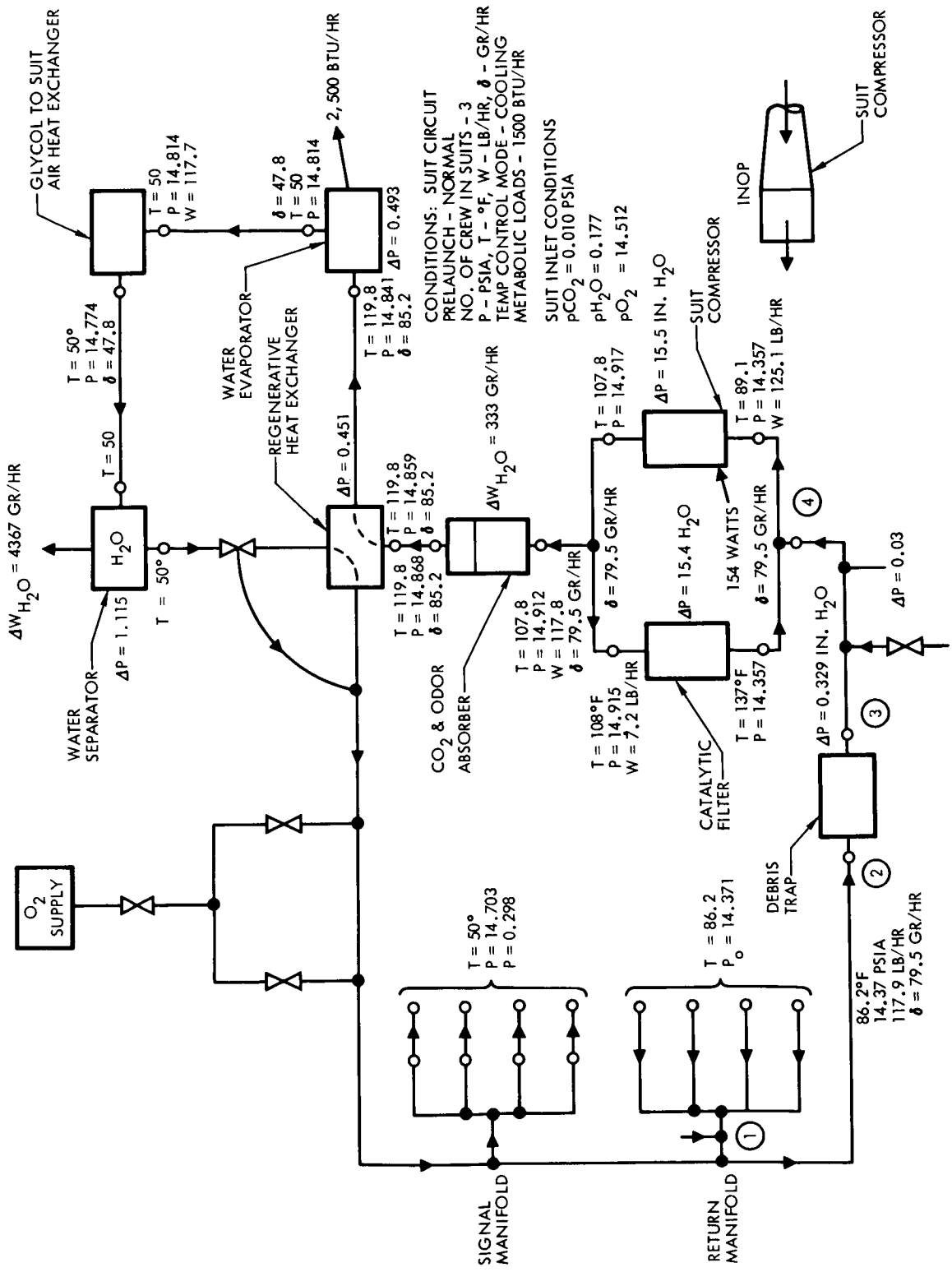

Figure 34. Suit Circuit Conditions (Sheet 6 of 6)

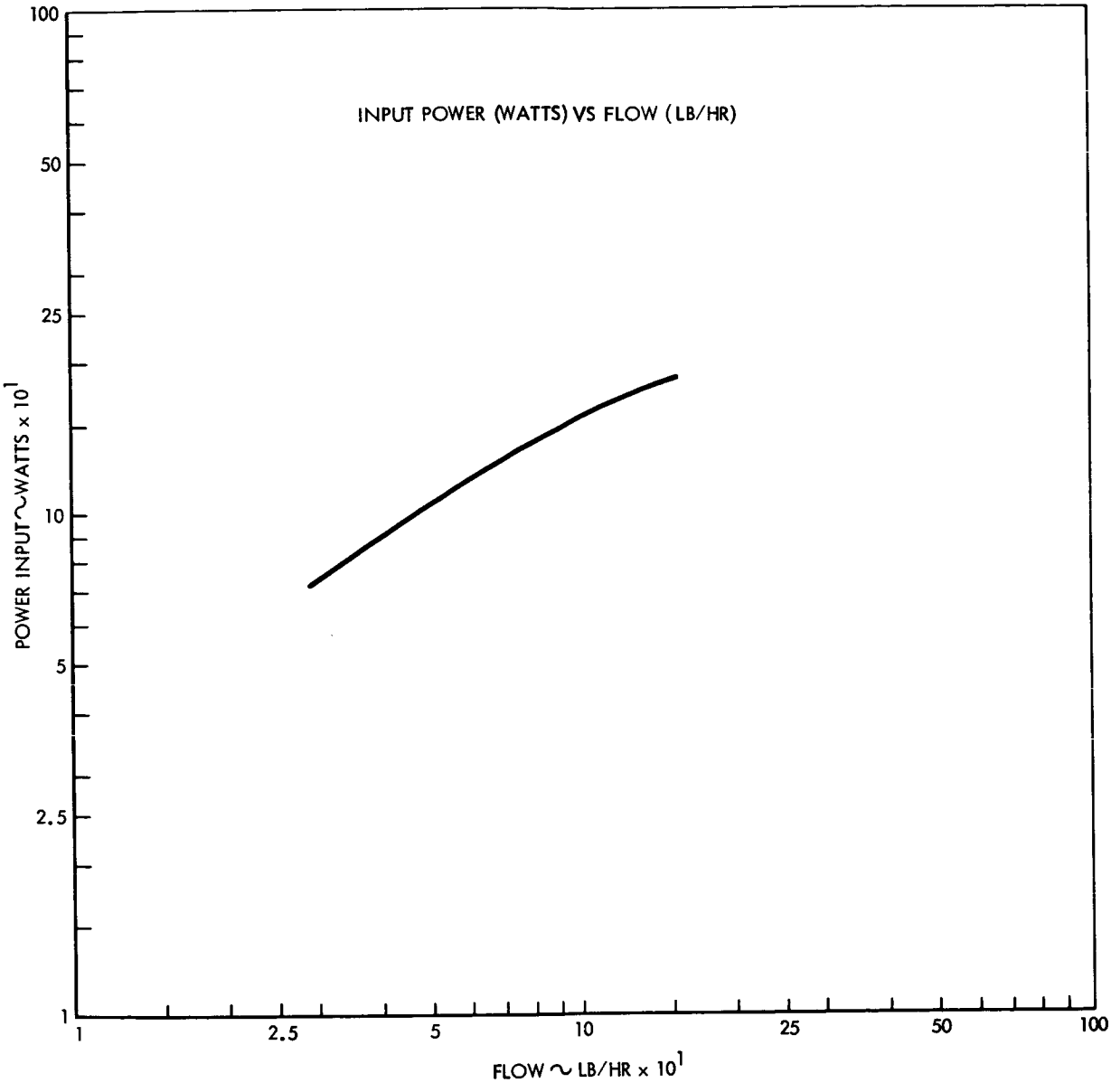

Figure 35. Pressure Suit Circuit Compressor (Sheet 1 of 2)

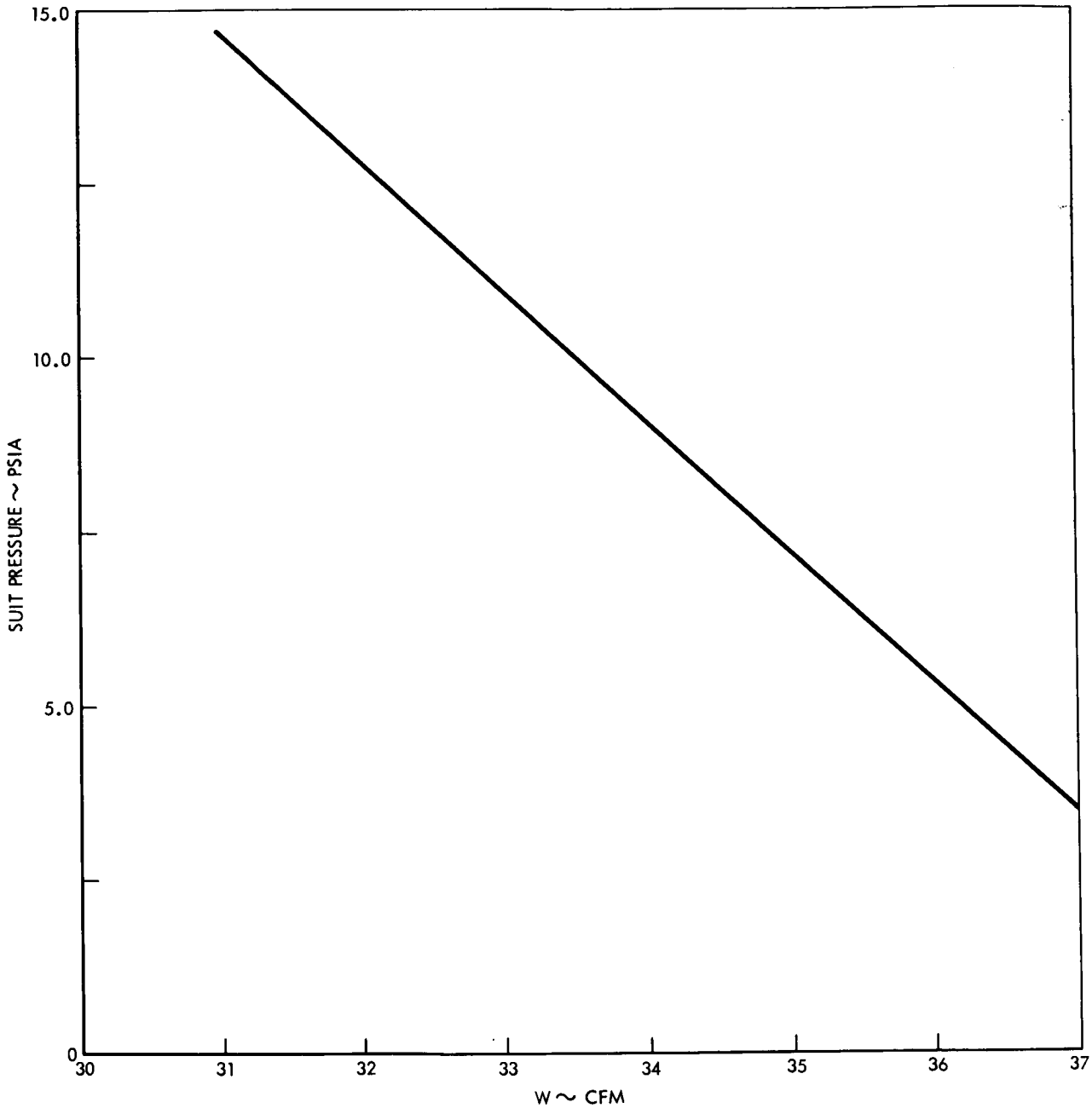

Figure 35. Pressure Suit Circuit Compressor (Sheet 2 of 2)

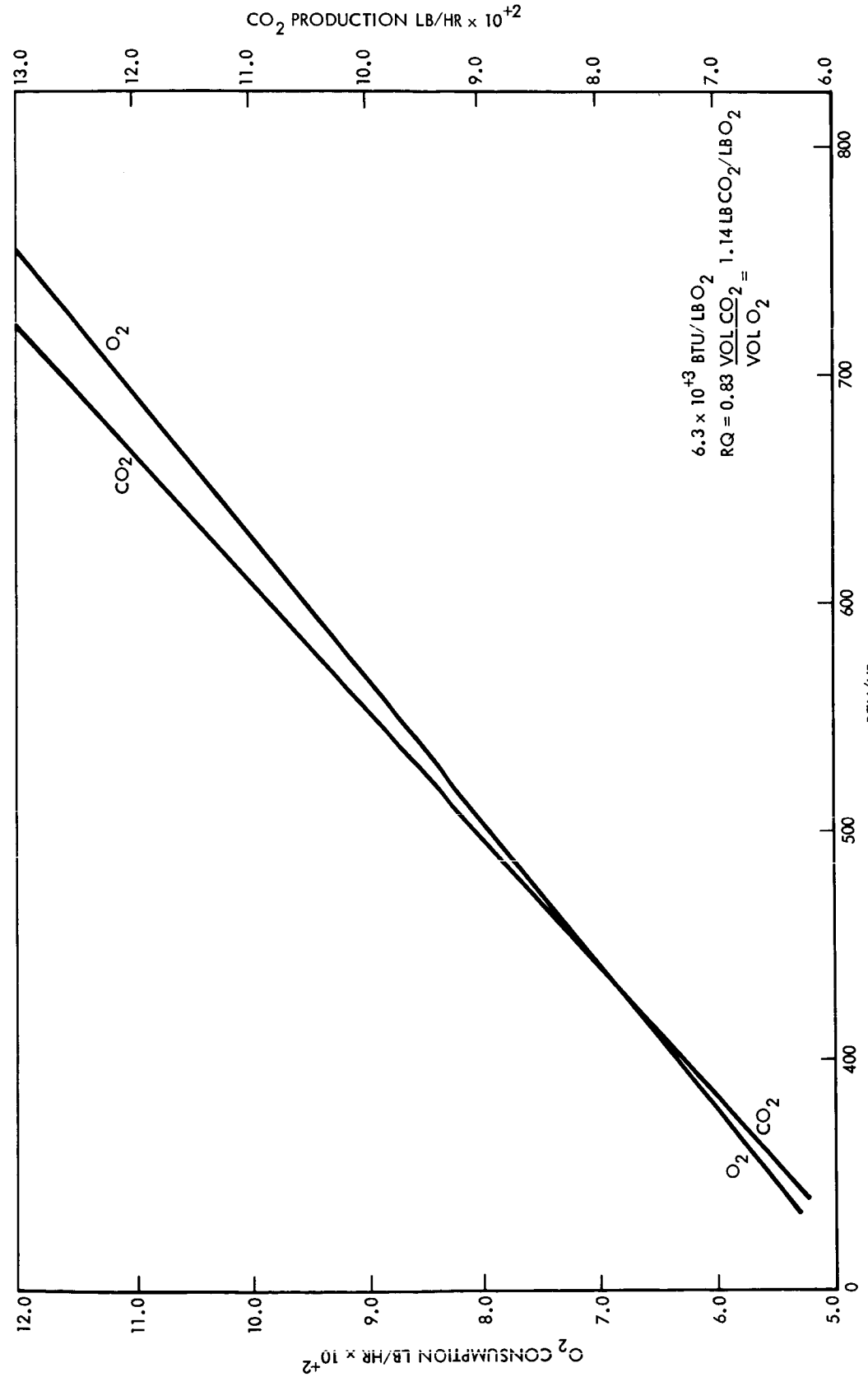

Figure 36. Metabolic Rate Versus O_2 Consumption, CO_2 Production

[redacted]

1. A list of materials to be used in the command module will be compiled from information supplied by Apollo design groups and will give expected composition and weight.

2. An analytical study to determine products of decomposition, outgassing ratio, and cabin concentration will be conducted. The study will consist of a literature search supplemented by a test program.

3. Ultimate cabin concentration for each gas that may be produced will be determined in the light of possible interrelation between outgasses, effect of the ECS units on outgassed products, and leakage rate control of contaminants.

4. Cabin concentration data will be supplied to Apollo life systems personnel who will determine toxic levels for each contaminant.

5. If a gas is found to exceed toxic level, the material producing the gas will be replaced by an alternate, nontoxic material or the ECS will be altered to control the toxic gas.

An analysis was conducted to determine the time required to depressurize and repressurize the air lock as a function of line size and valve effective orifice area. The results of the analysis are shown on Figure 37. The selected depressurizing time of 1 minute requires an 0.90-inch-diameter orifice. The selected repressurizing time of 2 minutes requires an 0.33-inch-diameter valve orifice. These selections were made to minimize air lock time for crew members and to be consistent with reasonable line and valve sizes.

An analysis was made to determine command module pressure and pressure decay rates for various leakage rates caused by structure failure and/or meteorite penetration. The results in Figure 38 are for the pressurization system in operation.

The normal oxygen and nitrogen inflow valves supply the cabin with gas at a maximum of 0.06 pounds per minute, which will maintain 7.0 psia cabin pressure with holes up to 0.11 inches in diameter. With holes greater than 0.11 inches in diameter, the cabin pressure decreases rapidly to 6.5 psia. At this condition a flood-flow valve opens permitting oxygen to enter the cabin at a rate of 0.7 pounds per minute. This rate of flow is maintained for any pressure below 6.5 psia.

With any hole greater than 0.37 inches in diameter, pressure decay will occur. The rate of decay is a function of the internal cabin volume, the orifice coefficient, and the size of hole. The rate of pressure decay for

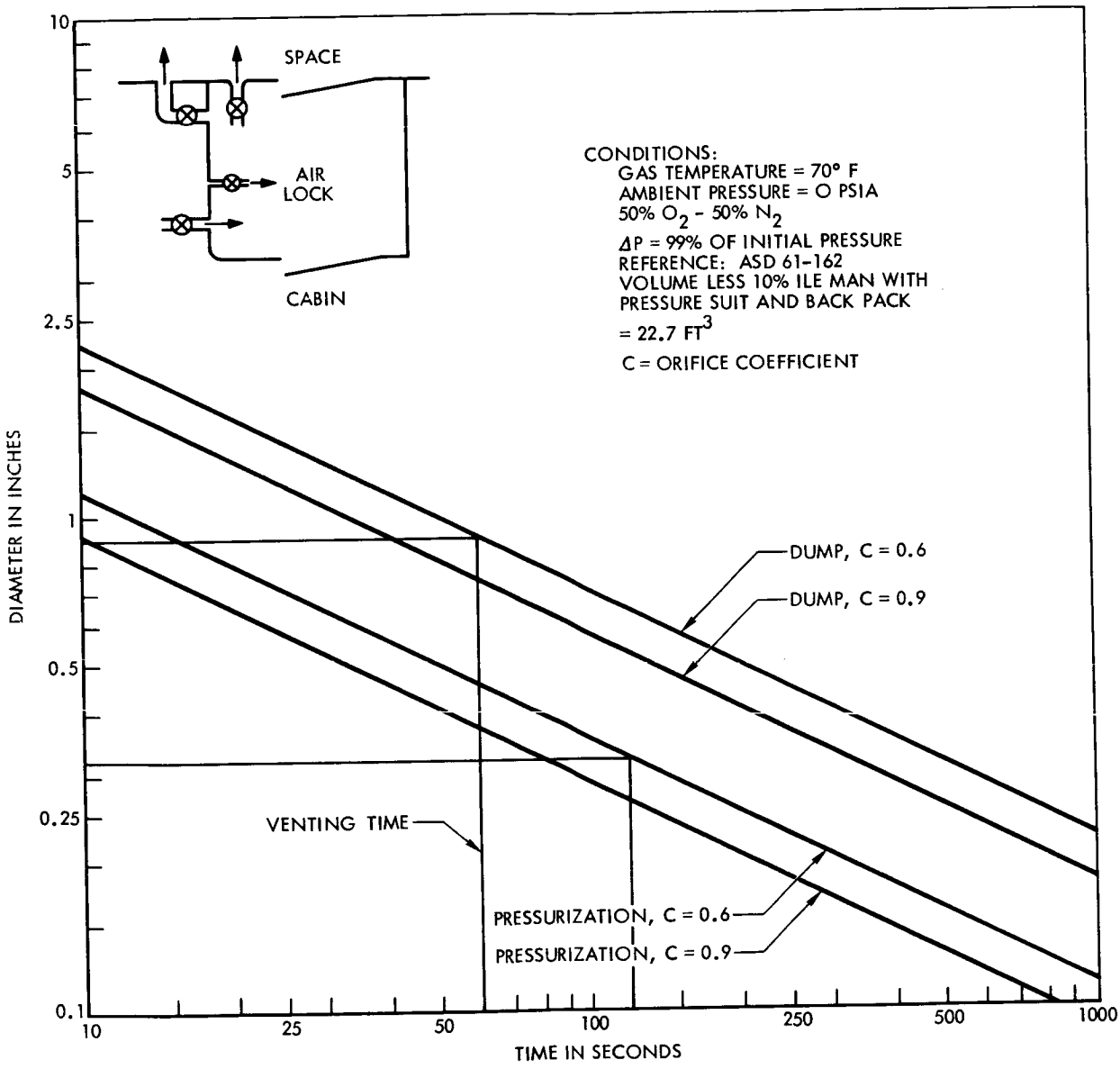

Figure 37. Air Lock Dump and Pressurization Time as a Function of Inlet or Outlet Diameter

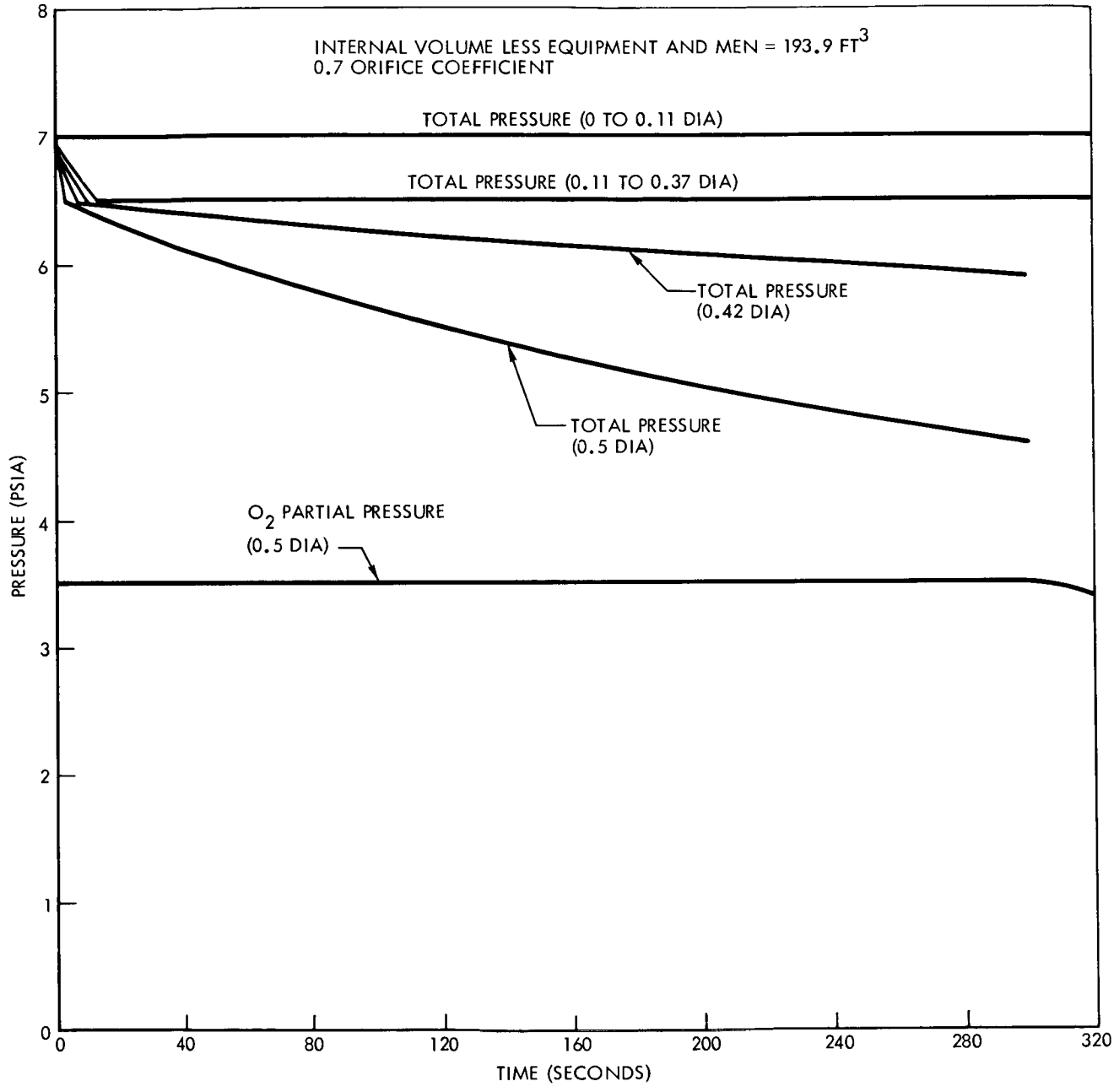

Figure 38. Command Module Pressure Decay for Various Hole Sizes

0.5-inch-diameter hole is such that the oxygen partial pressure will remain at 3.5 psia for a period of 5 minutes, when the flood-flow valve is open. With hole diameters between 0.37- and 0.5-inch, the total cabin pressure will decay at a slower rate, and oxygen partial pressure of 3.5 psia will be maintained for longer periods.

Equipment Cooling

Preliminary analysis established the physical requirements of the coldplate to be selected. The developed coldplate coolant passages are essentially a series of parallel passes running lengthwise.

The computer analysis consisted of solving for plate surface temperature using assumed values for fluid film heat transfer coefficients and fluid friction calculated from empirical expressions. Plate temperatures were obtained for several values of heat flux, coolant flow rates, and coolant temperature rises. Values were chosen to be as anticipated in the command module installation. See Figure 39 for preliminary results of this program.

The flow distribution, pressure drop, and coolant temperature levels applicable to the series-parallel circuit arrangement of coolant flow through the command module coldplates were obtained by analyses. The general type of coolant circuit involved is shown in Figure 40.

The pressure-drop data in the analyses are based on a value of hydraulic diameter equal to four times the cross-sectional area divided by the wetted perimeter. Recent pressure-drop tests on experimental coldplate have demonstrated that the general formula yields too conservative a value. Incorporating the values obtained from the test data, the pressure drop was recomputed to 1.25 psi. While the pressure drop at maximum flow is well within the design goal of 5 psi, excessive coolant temperatures have been noted. This has resulted because the temperature rise has been calculated using the maximum rather than the average power dissipation for every module.

The thermal resistance applicable to the interface between equipment bases and the coldplate surface has been obtained by tests of several materials and types of interfaces.

Test sample plates were 3 x 3 x 1/4-inch No. 6061 aluminum. Figure 41 is the schematic of the test setup used and shows the results obtained, and Figure 42 is a photograph of the test setup. Figure 43 shows a test sample in place with insulating blocks on top and bottom of the plates; external insulation and the bell jar have been removed to show the sample. Representative results of actual tests are shown in Figure 44.

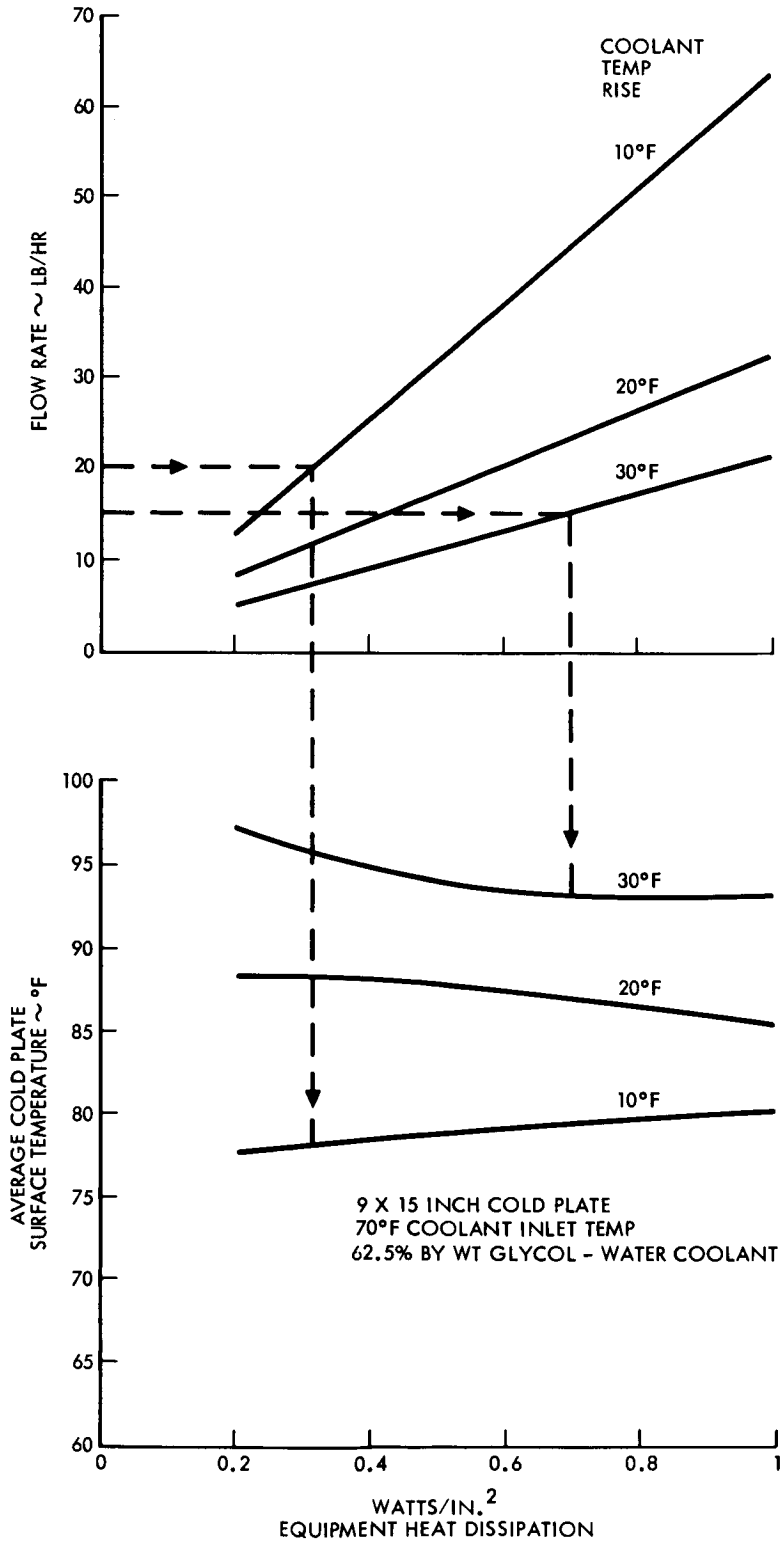

Figure 39. Single Coldplate Analysis—Surface Temperature

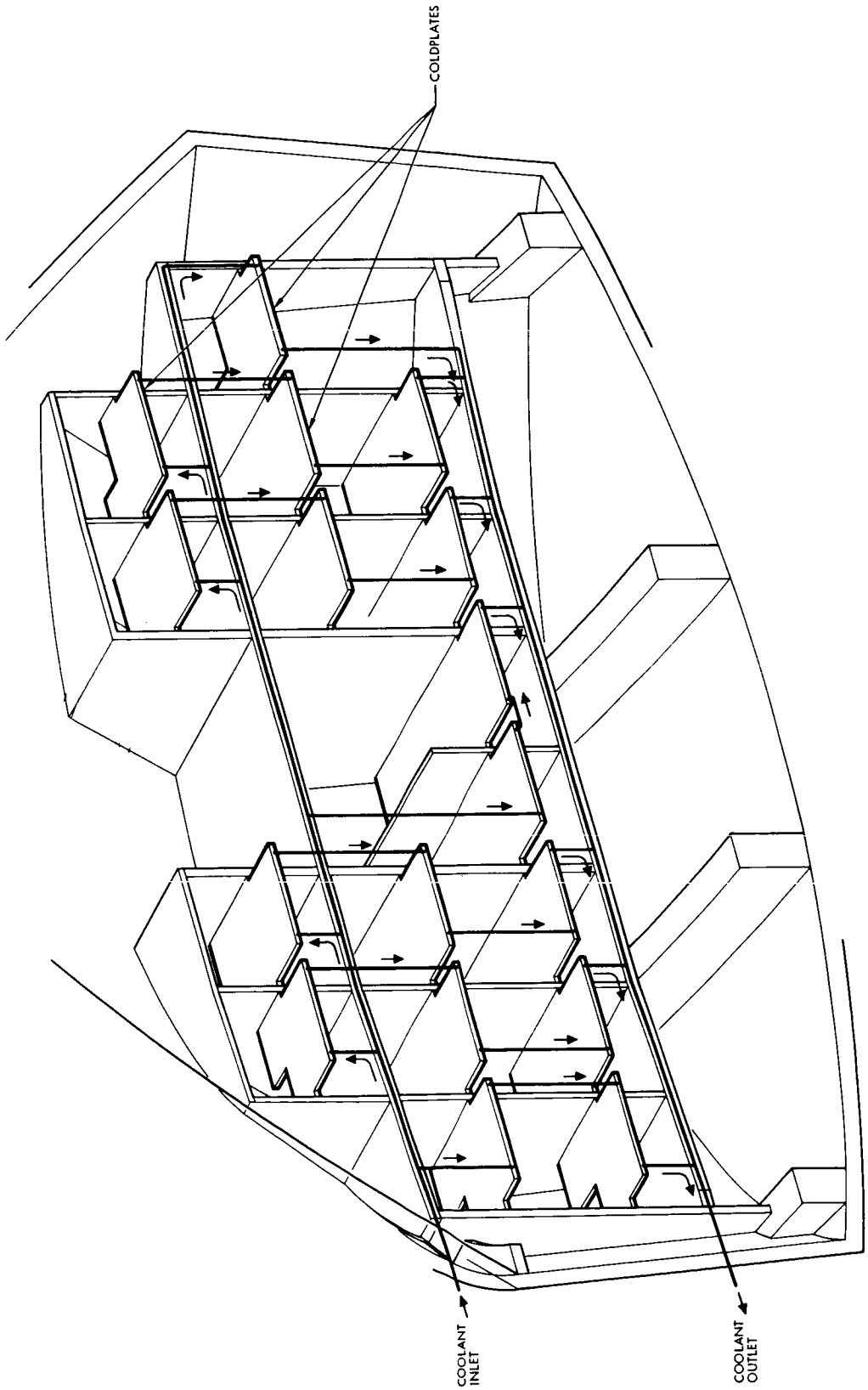

Figure 40. Coldplate Network

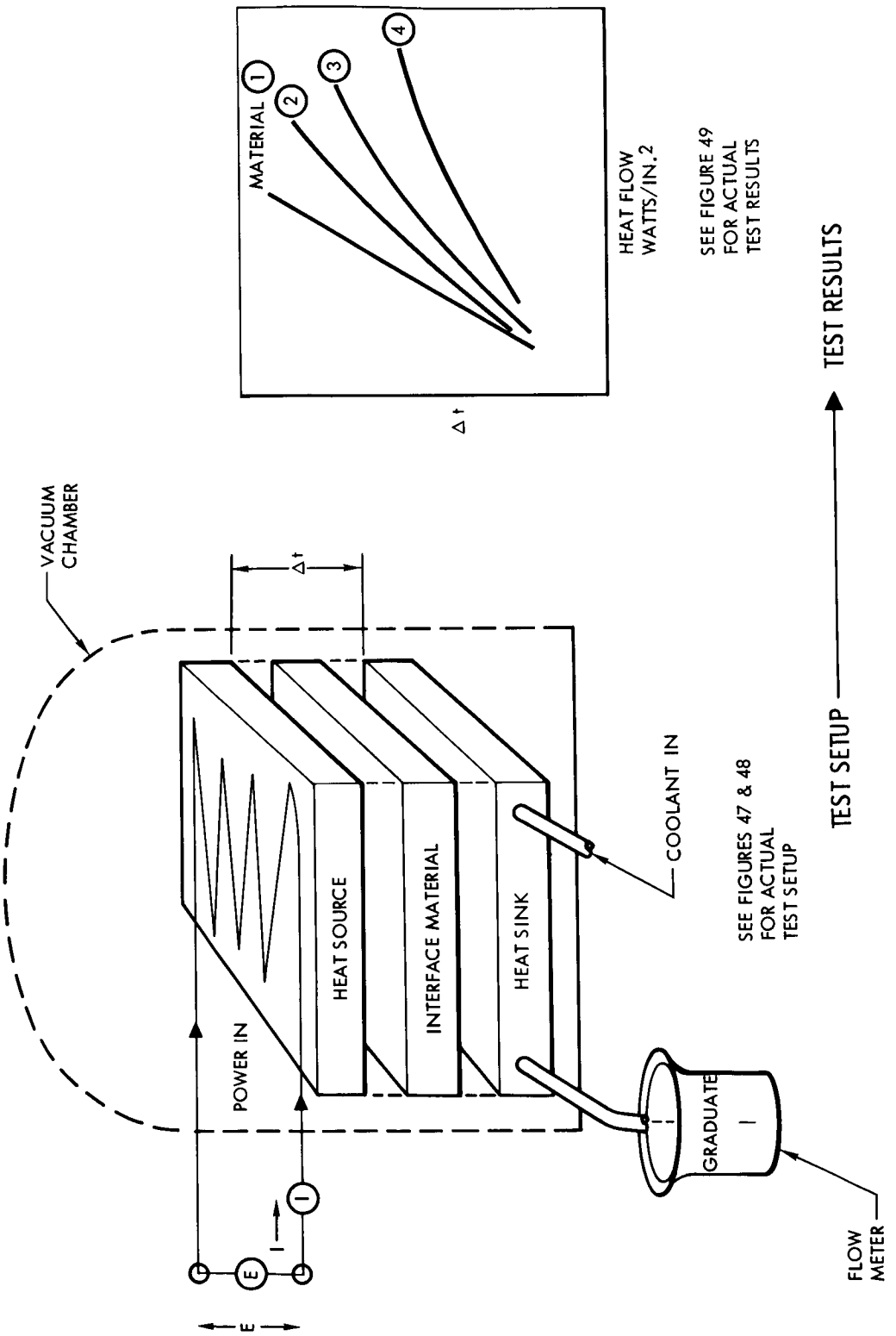

Figure 41. Coldplate Interface Conductance Test Setup—Schematic

CONFIDENTIAL

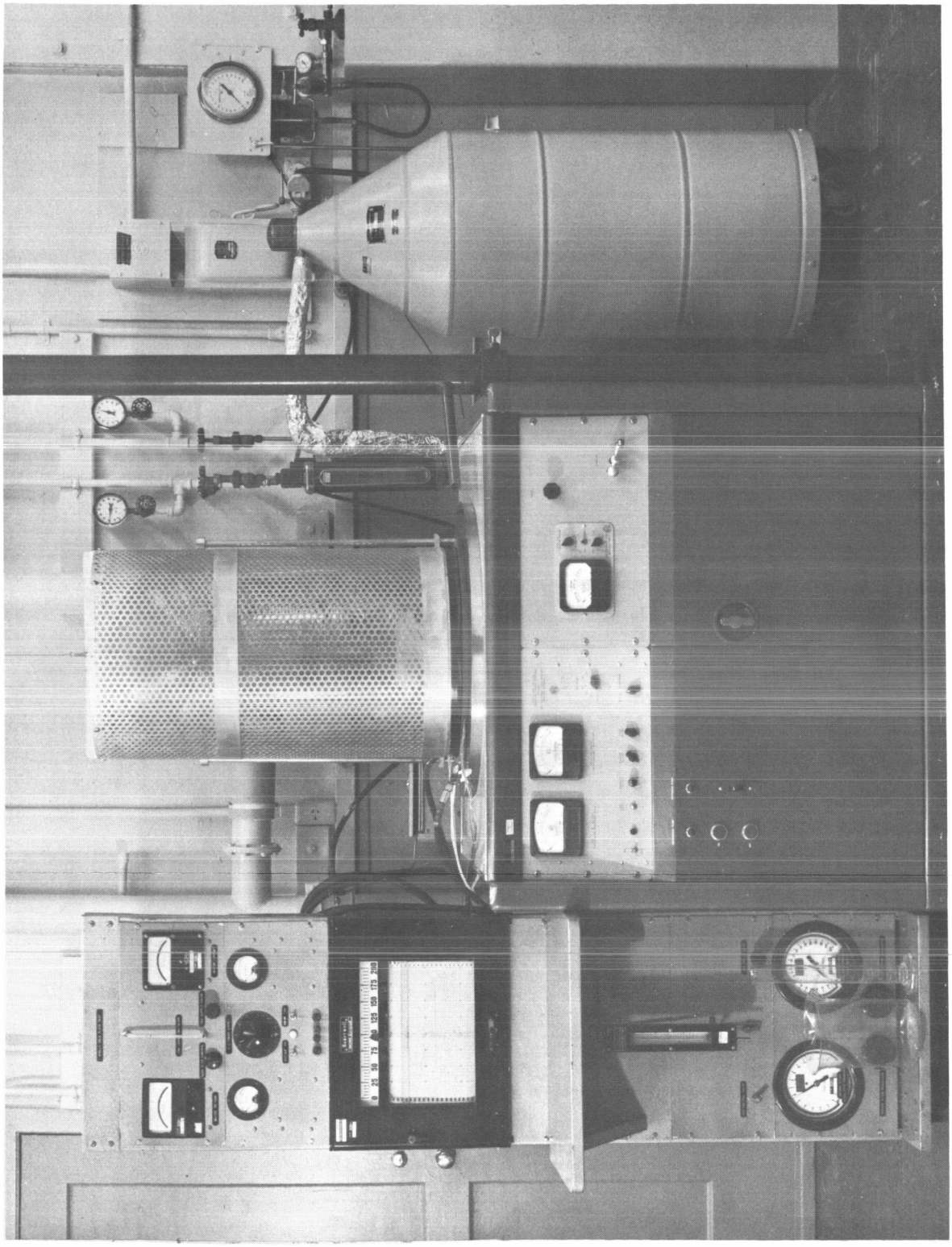

Figure 42. Coldplate Interface Conductance Test Setup—Photograph

CONFIDENTIAL

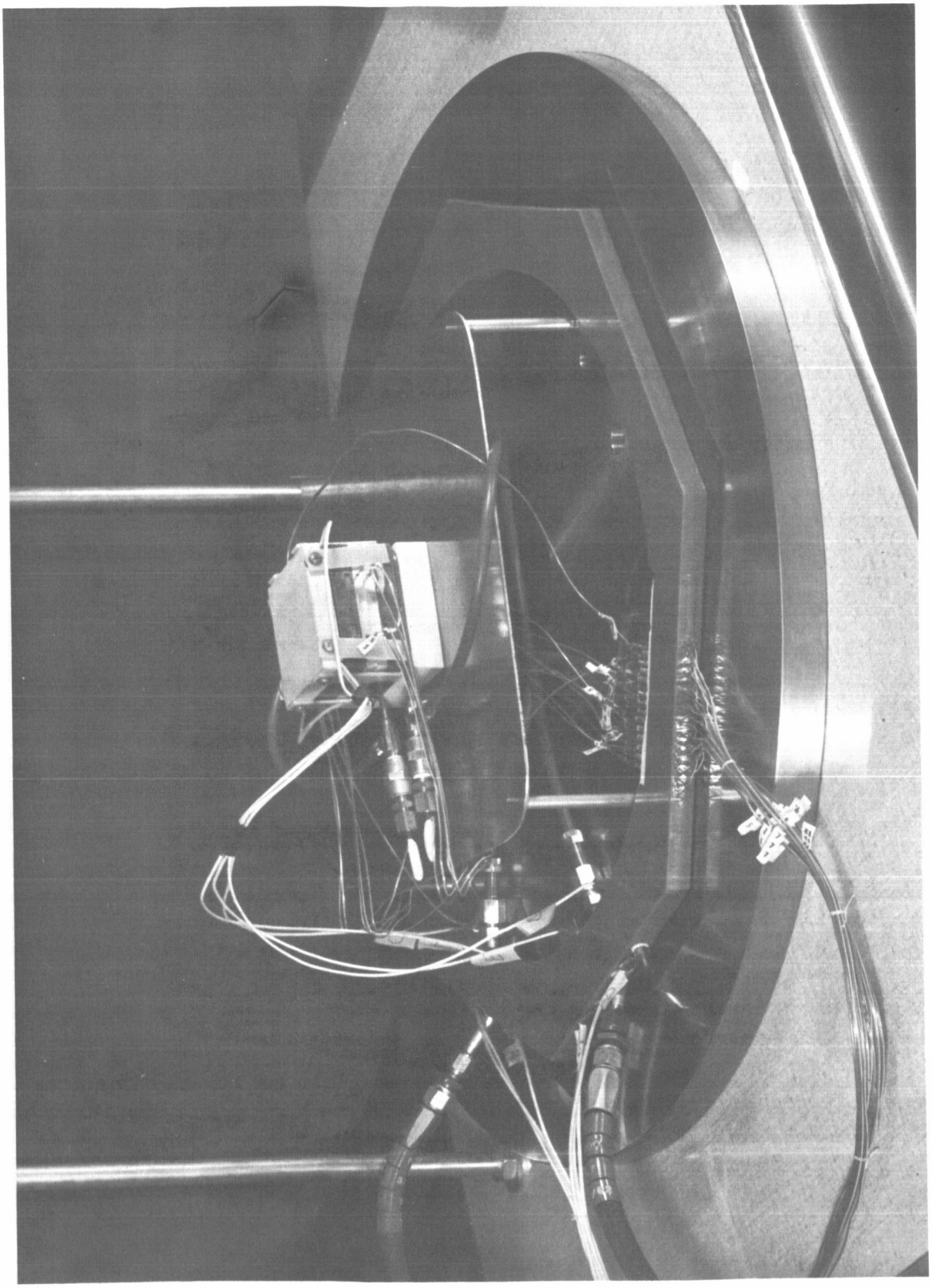

7005-81-56C

Figure 43. Test Sample in Place, Insulated Top and Bottom

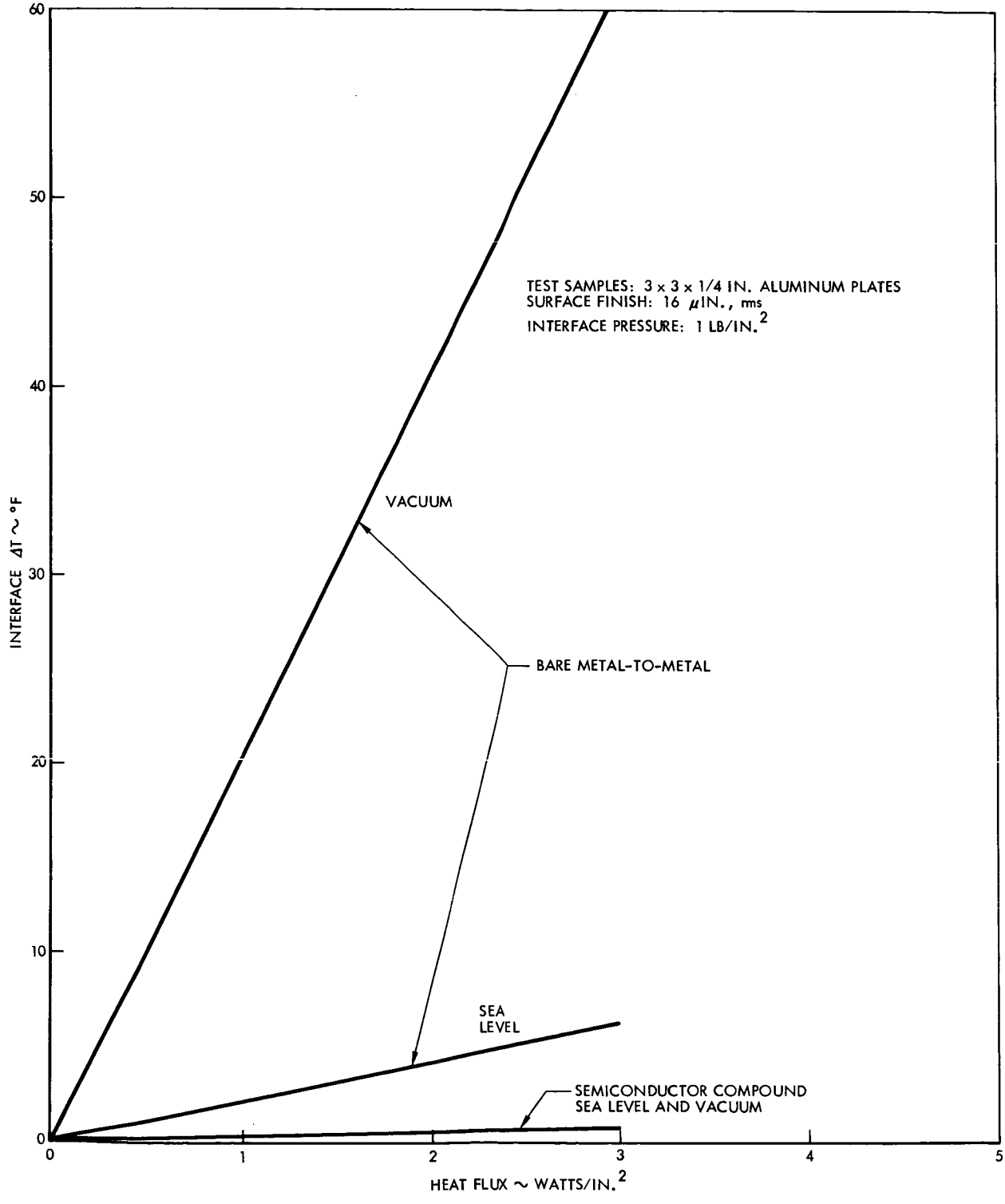

Figure 44. Equipment Base-To-Coldplate Interface Conductance Tests

The heat was distributed uniformly in the tests, and the interface mating pressure did not exceed 2 psi. Test ambient pressures were 14.7 psia and 1 x 10^{-5} mm Hg absolute.

NUCLEAR RADIATION AND SHIELDING

Information on nuclear radiation and shielding will be included in Apollo Nuclear Radiation Protection Systems, SID 62-831.

Bare metal-to-metal interfaces were tested with samples of various surface finishes and various degrees of flatness. Satisfactory conductance values were obtained at sea-level ambient pressures, but none of the surfaces was satisfactory in a vacuum. (See Figure 44.)

The second of two nonprototype coldplates tested appears satisfactory, and overall pressure drop tests have been run giving pressure drops near the expected results. This plate is now being prepared for further pressure drop testing and preliminary thermal testing at sea-level ambient pressure and in a vacuum. Two prototype cold plates are being prepared using chem-milling and adhesive bonding fabrication processes.

POWER SYSTEMS ANALYSIS

Fuel Cell

Data points for a constant volume process with heat addition and mass withdrawal were computed using thermodynamic property charts. Prelaunch warm-up power has been computed as a function of initial temperature. A transient heat transfer analysis was performed using the configuration and heater element data. Comparison of transient with steady-state heat fluxes indicated that power control would not be required for the initial warm-up period of 1 hour. Results of the analysis showed that approximately seven kilowatts will be required from the GSE power supply to heat the three-module assembly to its lower operating temperature of 300 F in 1 hour. At this load, all heating elements will operate at about 50 percent of maximum watt density and filament temperature.

Gas Storage Design Parameters

Tables 16 and 17 summarize important dimensional parameters for the super-critical gas storage subsystem. These data are based upon an assumed 15 percent ullage. Reducing the ullage will decrease the inner vessel diameter and power level for initial pressure buildup, but will impose more stringent insulation requirements. It now appears that the optimized system will use a smaller ullage, perhaps 3.0 percent.

CONFIDENTIAL

Table 16. Power Requirements for Gas Storage Tank Pressure Build-Up

Criteria	Fluid		
	Oxygen	Hydrogen	Nitrogen
Total current (amps)	90.0	8.70	9.52
Voltage	28	28	28
Total power (kw)	2.52	0.244	0.266
Time (min)	50	50	50

NOTE: This tabulation is based on the following:

1. 14-day mission with subsolar lunar landing
2. Pressure build-up period of 50 min
3. 50% safety factor for the environmental control system oxygen and nitrogen gas (50% excess gas)
4. Two tanks for each gas
5. 15% ullage
6. Heater size for one tank

Table 16 lists power requirements for the 50-minute duration of initial pressure buildup. Input power increases internal energy of the gases; requirements were computed with the aid of thermodynamic property charts.

Table 17 is a tabulation of inner and outer shell diameter, insulation thickness, ground standby time, and storage volumes for the spherical tanks selected. The hydrogen vessel is largest because of the low gas density compared to the other two gases. Although oxygen and nitrogen storage densities are similar to each other, the nitrogen vessel is approximately one-half the diameter of the oxygen container since a smaller mass is carried.

Table 18 presents gas flow data for three of the most likely gas storage system malfunctions. The mass flow rates listed represent gas vented to ambient through the system relief valves because of overpressurization. The most severe case occurs when a heater stays on. This danger can be minimized by providing a manual override on the tank pressure operated heater switch. Annular space vacuum loss in flight is not serious except as a result of inner vessel rupture, or if occurring while within earth or moon

CONFIDENTIAL

[redacted]

Table 17. Gas Storage Tank Dimensions

Consideration	Fluid		
	Oxygen	Hydrogen	Nitrogen
Inside diameter (in.)	25.6	28.9	13.7
Outside diameter (in.)	26.55	31.4	15.5
Insulation thickness (in.)	0.442	1.21	1.312
Ground standby time (hr, no topping)	64.5	60	60
Configuration	Sphere	Sphere	Sphere
Storage volume (ft^3, one tank)	5.3	7.25	0.77

NOTE: This tabulation is based on the following:

1. 14-day mission with subsolar lunar landing
2. NRC-1 National Research Corporation insulation with an applied vacuum of 10-5 mm Hg, k = 5.2 x 10-5 Btu/hr-ft-°R
3. 50% safety factor for the environmental control system oxygen and nitrogen gases (50% excess gas)
4. Two tanks for each gas
5. 15% ullage
6. Dimensions do not include valves and accessories
   The above is preliminary information and is subject to change upon finalization of mission profile and cryogenic system supplier selection.

atmosphere. The values listed under this category assume the annular space has become filled with tank gas.

Space Radiator

The ECS radiator heat rejection requirements were established during this report period. An analysis based on preliminary performance parameters and a subsolar lunar landing was completed. The radiator was sized assuming a random vehicle orientation (radially) on the lunar equator at the subsolar condition. The analysis indicated that a vertical radiator

[redacted]

Table 18. Gas Flow Data for Storage System Malfunctions

Condition	Fluid	
	Oxygen Flow (lb/hr)	Hydrogen Flow (lb/hr)
(1) Vacuum loss on earth (one tank)	47.2	6.45
(2) Heater stays on (one tank)	107	5.51
(3) Vacuum loss in flight (one tank)	35.0	14.9

Conditions:

1. Outer shell rupture.
2. Malfunction in pressure regulator causes the heaters to remain on.
3. Inner shell rupture, annulus gas filled, S/M pressure = 0

NOTE: This tabulation is based on the following:

1. 14-day mission with subsolar lunar landing.
2. 50% safety factor for the environmental control system oxygen and nitrogen gas. (50% excess gas)
3. Two tanks for each gas.
4. 15% ullage.
5. 2.52 kw heater for one oxygen tank, and 0.244 kw heater for one hydrogen tank.

panel could not be employed for the lunar-landing mission because the equilibrium temperature of this surface would exceed the highest tolerable radiator outlet temperatures for an extended period of time. Investigation of the use of a heat pump resulted in a configuration that was top heavy, complex, and required a great deal of electrical power. The present design assumes a horizontally deployed radiator for lunar surface operation.

Figure 45 shows the maximum and minimum heat rejection capabilities of the 118-square-foot radiator using by-pass and shut-off control of the four sections. The curves are based on a 14-earth-day, lunar-day environment.

Electrical Power System (EPS) Radiator

The EPS heat rejection system was analyzed, and the design criteria were established during the past quarter. The study indicated that a fixed

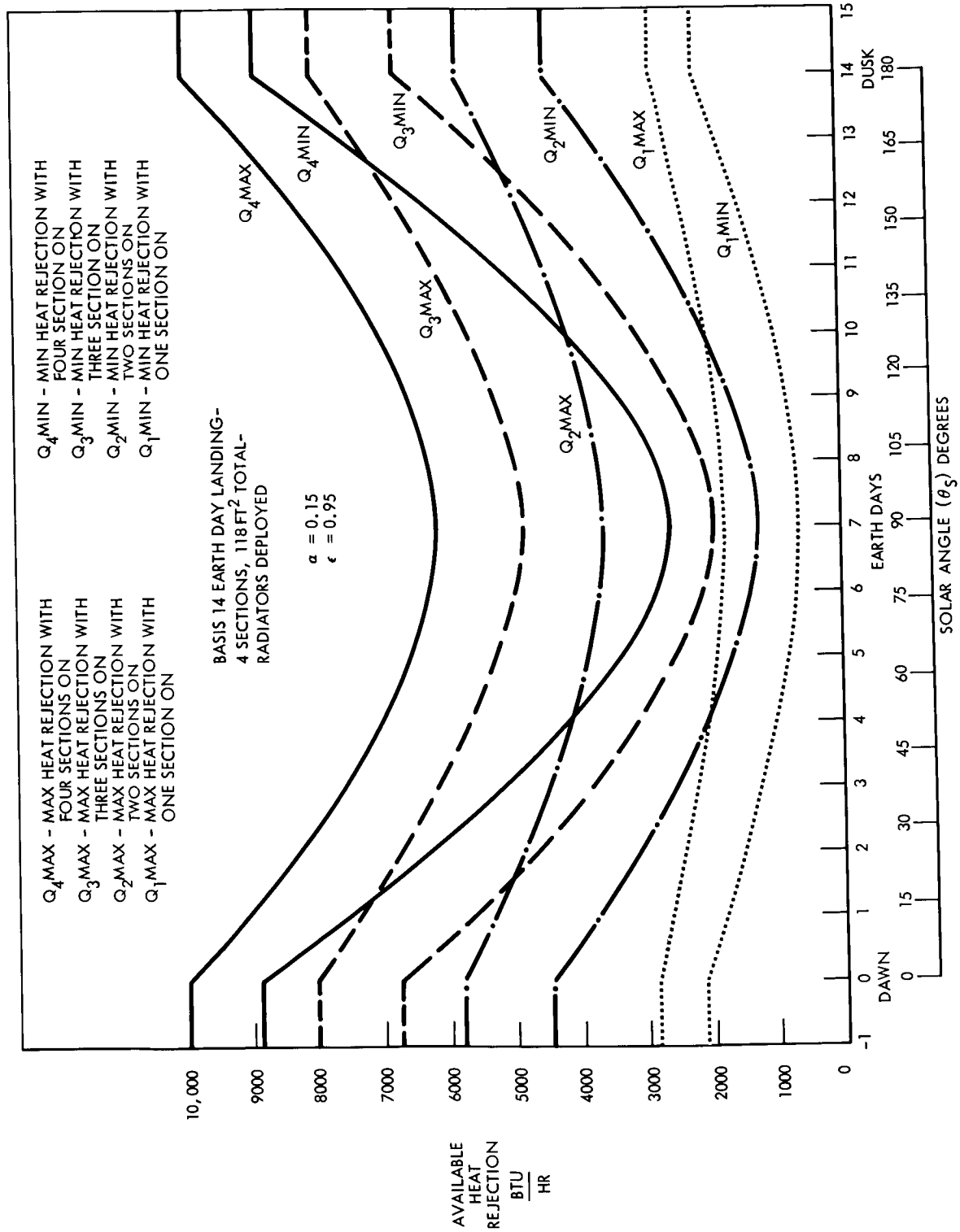

Figure 45. ECS Radiator—Rejection Capability Versus Time

54-square-foot vertical radiator could be employed on the lunar surface to dissipate the maximum thermal loads under the existing mission power requirements. The present configuration provides for 18 square feet of radiator in series with each of the three EPS fuel cells.

A computer program capable of handling the system transients will be employed to develop true characteristic curves. The portion of the curve tangent to the 100-percent q (maximum heat load) indicates that this is the design point where the most adverse environmental conditions exist. The actual characteristic curve will be a straight line at 100-percent q but will represent varying (inlet and outlet) radiator temperatures.

The radiator design is based on a radiator surface coating with optical properties for solar absorptivity (αs) equal to 0.27 and an emissivity of 0.85, which are the values that can presently be obtained. Any improvement in these optical properties would result in a reduction in area requirements.

Integrated Heat Rejection Systems

Investigations were conducted to analyze integrated ECS-EPS heat rejection systems. The requirements were to provide system capabilities for both lunar night and lunar day landings. Thermal requirements, design complexity, radiator area requirements, reliability, and system weight were considered. The two integrated systems considered were an integrated water-glycol loop with a single radiator system and independent radiators with the individual glycol loops united through an ECS to EPS heat exchanger.

The analysis indicated that the first approach would require a much heavier structural configuration of approximately 200 pounds to provide the required deployable radiator area. This would add complexity to the control systems, but would result in increased overall system reliability. Since reliability of either configuration exceeds the design requirements, the latter method of integrating the systems and providing the desired versatility was deemed more desirable.

If operation on the surface of the moon during lunar day is not required, the radiators can be nondeployable and the first method would become more desirable because of the elimination of the 300-pound panel.

Surface Properties

To optimize Apollo heat rejection systems, reliable temperature control coatings must be obtained for use on the space radiator surfaces. Optical properties of the coating must not degrade to unusable values in the space environment. A test program has, therefore, been initiated to investigate candidate surface coatings under simulated mission environments.

Tentative arrangements have been completed to employ Mercury and orbiting solar observatory (OSO) vehicles for evaluating candidate radiator coatings. The Mercury test will attempt to recover the test sample for comparison of the optical properties with preflight values. The Apollo ascent environment will be closely simulated by this test, and any degradation due to these effects will be evaluated. The OSO test will permit investigation of ultraviolet effects under space vacuum conditions. The results will be compared with the effects of the laboratory simulated environments. If the laboratory data correlate with those from orbiting vehicles, an accelerated evaluation program will be possible.

A parallel investigation has been initiated to determine the effects of nonspace environments on the temperature control surfaces. The degradation of optical properties due to contamination by fuels, oxidizers, launch area environments, and lubricants will be evaluated. Suggestions for the use of suitable protective coatings will be made. These studies will be coordinated with the groups responsible for fabrication and logistics.

DISCUSSION

The design requirement for a single cabin 1/2-inch-diameter puncture was taken from the NASA Apollo Work Statement, page 65. The system must be capable of maintaining a minimum cabin oxygen partial pressure of 3.1 psia for a period of 5 minutes (page 13 of the work statement). This is time is required either for the crew to don their space suits or to repair the puncture.

The conditions considered in the design requirement are as follows:

1. One-half inch diameter cabin puncture

2. Electrical power requirements of 2195 watts from one fuel cell module during emergency operations while in the retro phase prior to lunar landing

3. Electrical power requirements of 955 watts from one fuel cell module during emergency operation while on the lunar surface or coasting in space

4. Repressurizing cabin after puncture

	Response Time (Min to max flow)	Conditions	Lb/hr	Period of flow	dw/dt (lb/hr/sec)
Maximum Oxygen Flow	31.0 sec	1 & 2	39.28	5 min	1.36
Minimum Oxygen Flow	Does not apply	3	0.378	Long term	Does not apply
Maximum Hydrogen Flow	0.7 sec for 90% power increase	2	0.288	1.4 min	0.126
Minimum Hydrogen Flow	Does not apply	3	0.0947	Long term	Does not apply
Maximum Nitrogen Flow	3.5 min	4	3.70	1 hr	0.0175
Minimum Nitrogen Flow	Does not apply	3	0.045	Long term	Does not apply

Gas flow is cut off at the end of 5 minutes even if the puncture is not yet repaired. If the puncture cannot be repaired for a long period of time the cabin pressure eventually drops to 0.

CASE I

The weight penalty, considering repressurization from a cabin pressure of 0, is as follows:

Oxygen flow into cabin during the 5 minutes	2.78 lb
Oxygen repressurization	4.0
	6.78 lb
Nitrogen repressurization	3.51 lb

CASE II

If the puncture is repaired at the end of the 5-minute period the weight penalty is as follows:

Oxygen loss thru puncture during the 5 minutes	3.45 lb
Oxygen repressurization	0.67 lb
	4.12 lb
Nitrogen repressurization	2.09 lb

At the end of the 5 minute period, cabin pressures are as follows:

Oxygen partial pressure	3.1 psia
Nitrogen partial pressure	1.38 psia
Total Pressure	4.48 psia

Both cases are based on the following:

1. 14-day mission with subsolar lunar landing
2. Initial cabin atmosphere of 50 percent oxygen and 50 percent nitrogen by volume
3. A minimum total pressure of 3.5 psia and a minimum oxygen partial pressure of 3.1 psia
4. An initial total pressure of 6.8 psia and a cabin temperature of 75 F
5. Two tanks for each gas
6. 15 percent ullage
7. Cabin volume of 210.33 ft^3
8. A single one-half inch diameter puncture

Note: The maximum oxygen flow of 39.28 lb/hr considers a single cabin puncture and a maximum power requirement of 2195 watts occurring simultaneously during the retro phase prior to lunar landing.

PROPULSION SYSTEMS ANALYSIS

Propellant Systems

A method to determine properties of the helium pressurization system was programmed for high-speed computation. The mathematical model considers that ideal helium gas expands isentropically in the reservoir and that the ullage in the propellant tanks is maintained at a prescribed pressure. The complete gas system is considered as undergoing an adiabatic process with no heat transfer from the reservoir tanks or from the propellant to the gas.

In order to illustrate some of the salient features of this analysis, the 21,500-pound-thrust main engine propellant pressurization system was selected. The propellant flow rates were computed on the basis of a 2:1 oxidizer-to-fuel ratio with an I_{sp} of 315 seconds. Figure 46 illustrates a schematic of the pressurization system. In Figure 47, Sheet 1 depicts the reservoir mass in regard to time; Sheet 2 shows the increase of ullage mass with time; Sheet 3 shows the reservoir temperature as a function of time; and Sheet 4 shows the ullage temperature decrease with time.

Studies are continuing to ascertain the effect of helium gas nonidealities, heat transfer from the supply reservoir to the gas, heat transfer from the propellants to the ullage gas, and optimization of reservoir supply volume. Present indications are that an ideal gas analysis implies that the helium reserve is greater than necessary and indicates a real gas analysis necessary. Heat addition to the helium after leaving the helium tank and prior to entry into the propellant tanks is desirable to reduce weight of the pressurization system.

An analysis of the friction pressure drop in the propellant feed system of the service module main propulsion system was completed. The analysis was based on the series-connected propellant tanks. The results for the fuel and oxidizer lines are given in Figure 48. The selected line diameters were 2.5 inches for the fuel line and 3.25 inches for the oxidizer line. These values were selected for the 21,500-pound-thrust engine. These calculations do not account for a propellant utilization requirement that corrects mixture ratio for single component malfunction during a firing period to compensate.

Friction pressure drop analysis of the propellant feed system was accomplished using a four engine modular concept. Figure 49 illustrates the pressure drop as a function of line diameter for three propellant temperature levels. A 0.35-inch-diameter fuel line and a 0.40-inch-diameter oxidizer line were recommended.

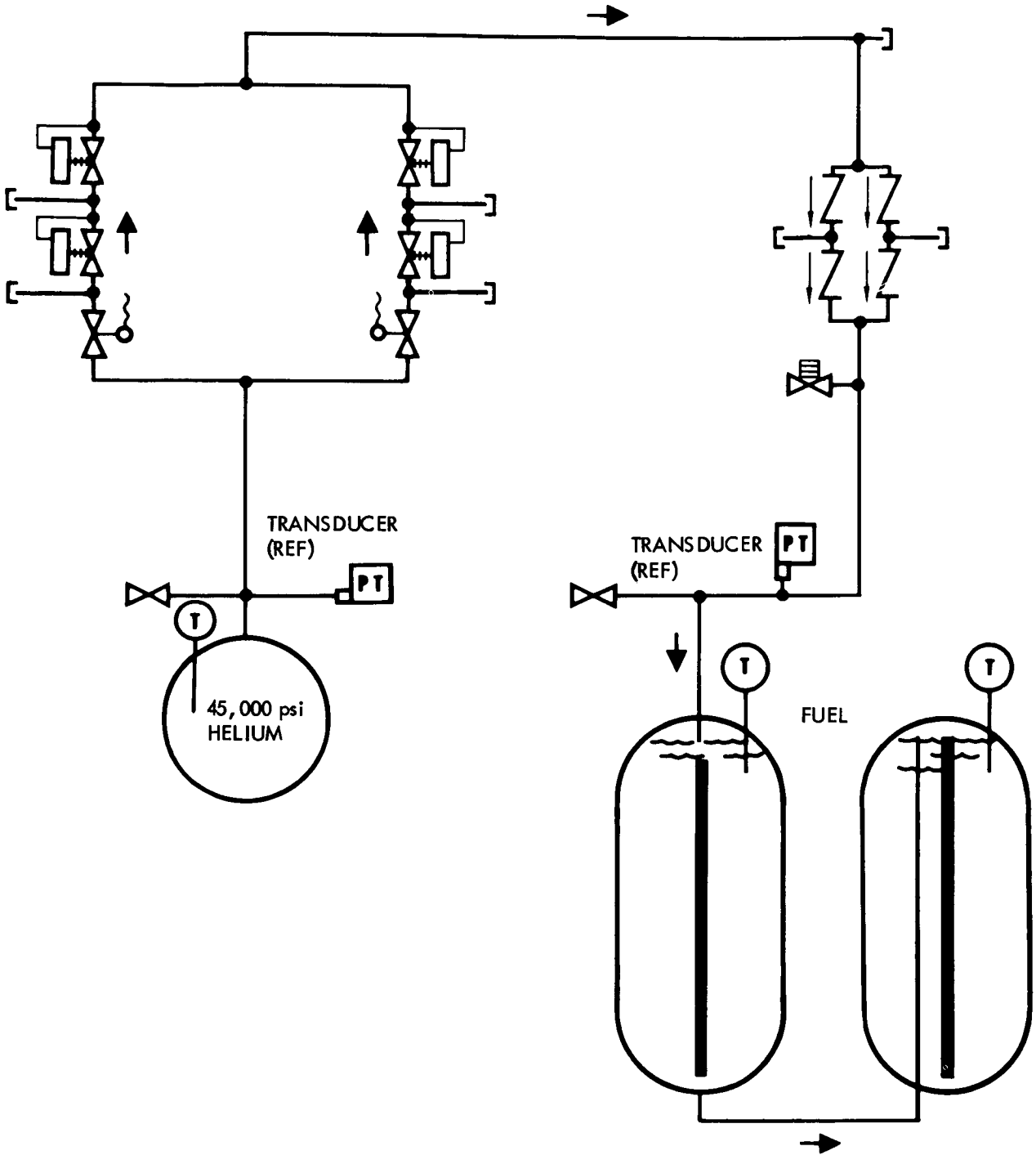

Figure 46. Service Propulsion Propellant Pressurization System

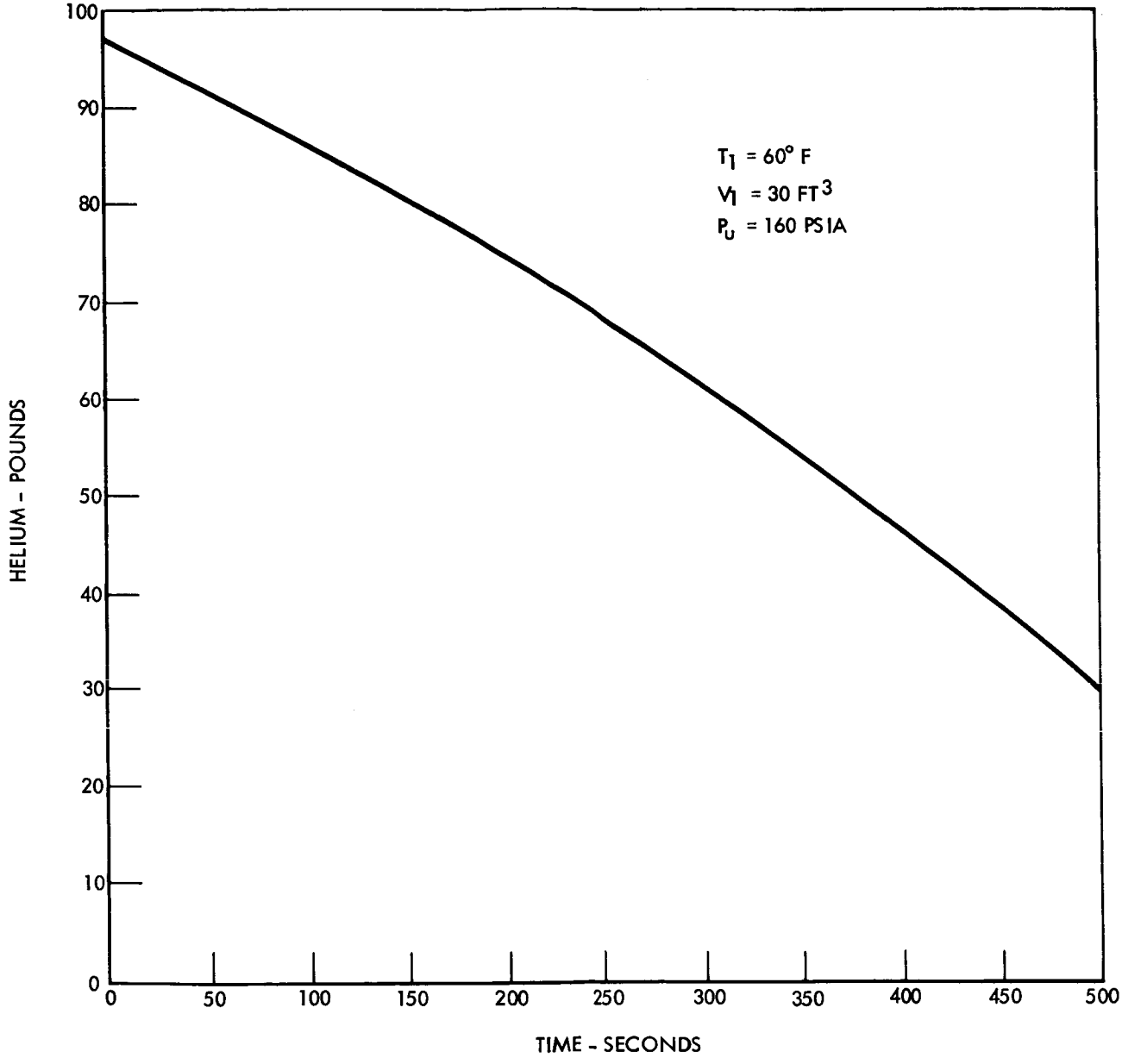

Figure 47. Service Module Main Propulsion System (Sheet 1 of 4)

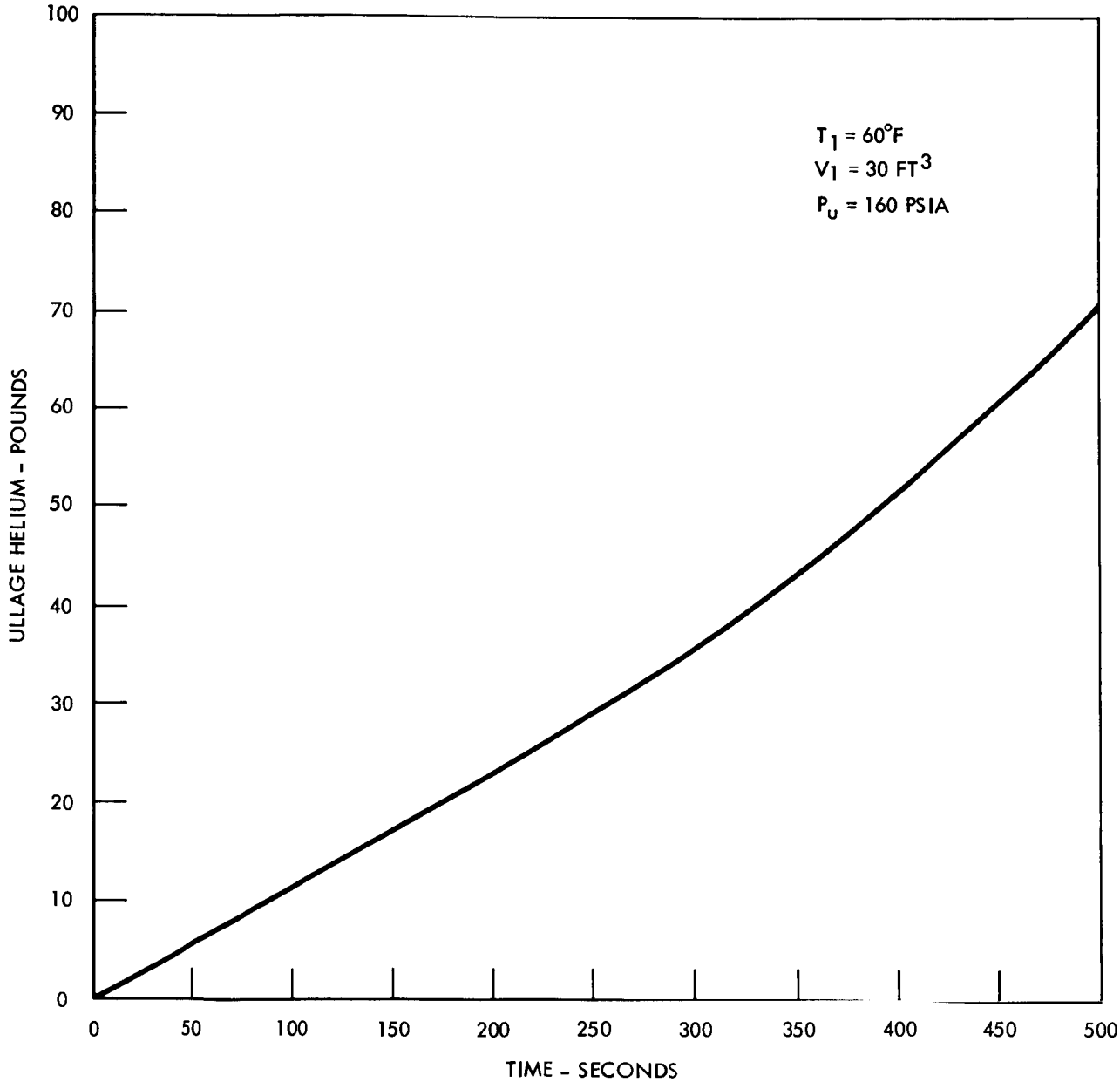

Figure 47. Service Module Main Propulsion System (Sheet 2 of 4)

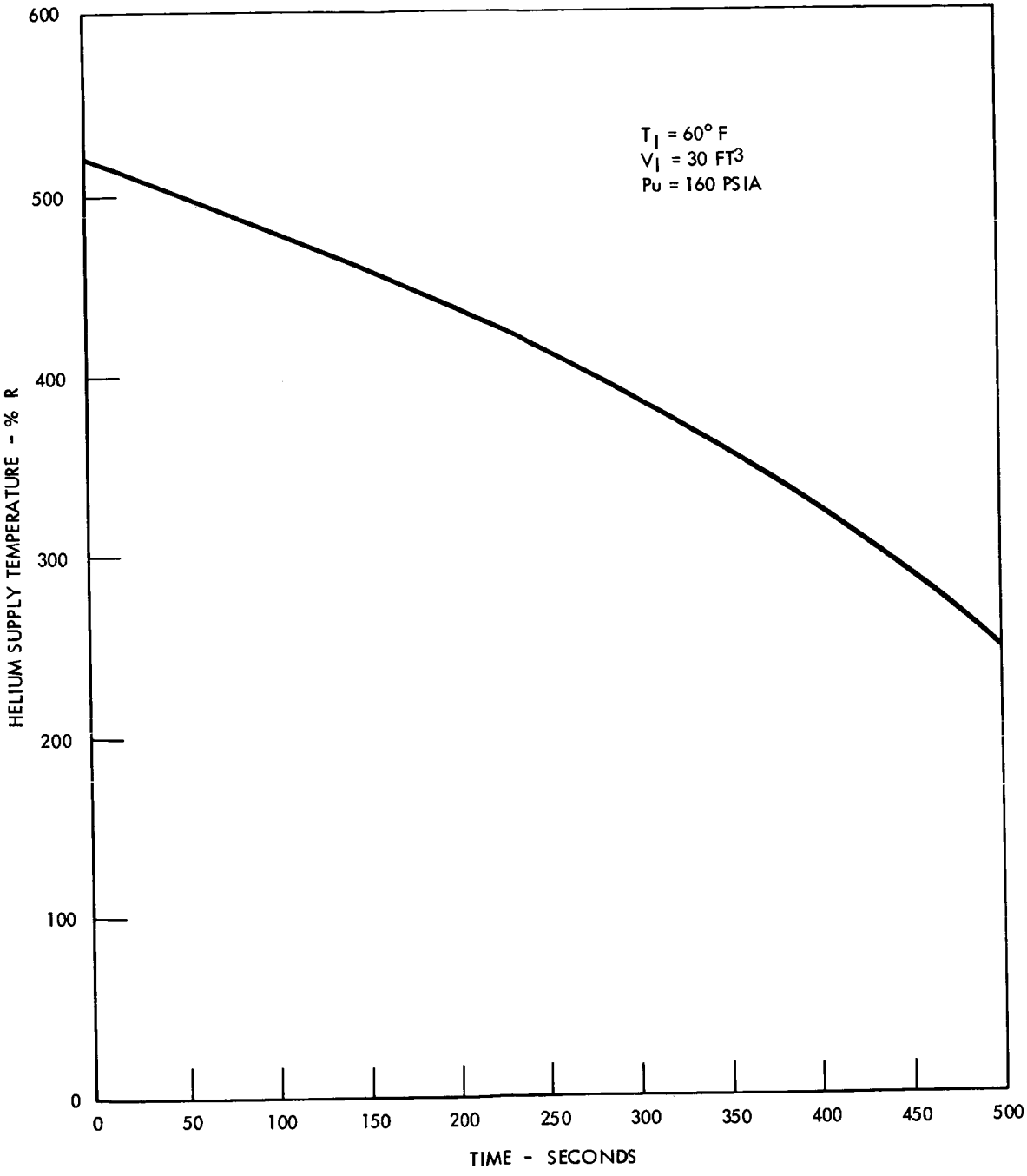

Figure 47. Service Module Main Propulsion System (Sheet 3 of 4)

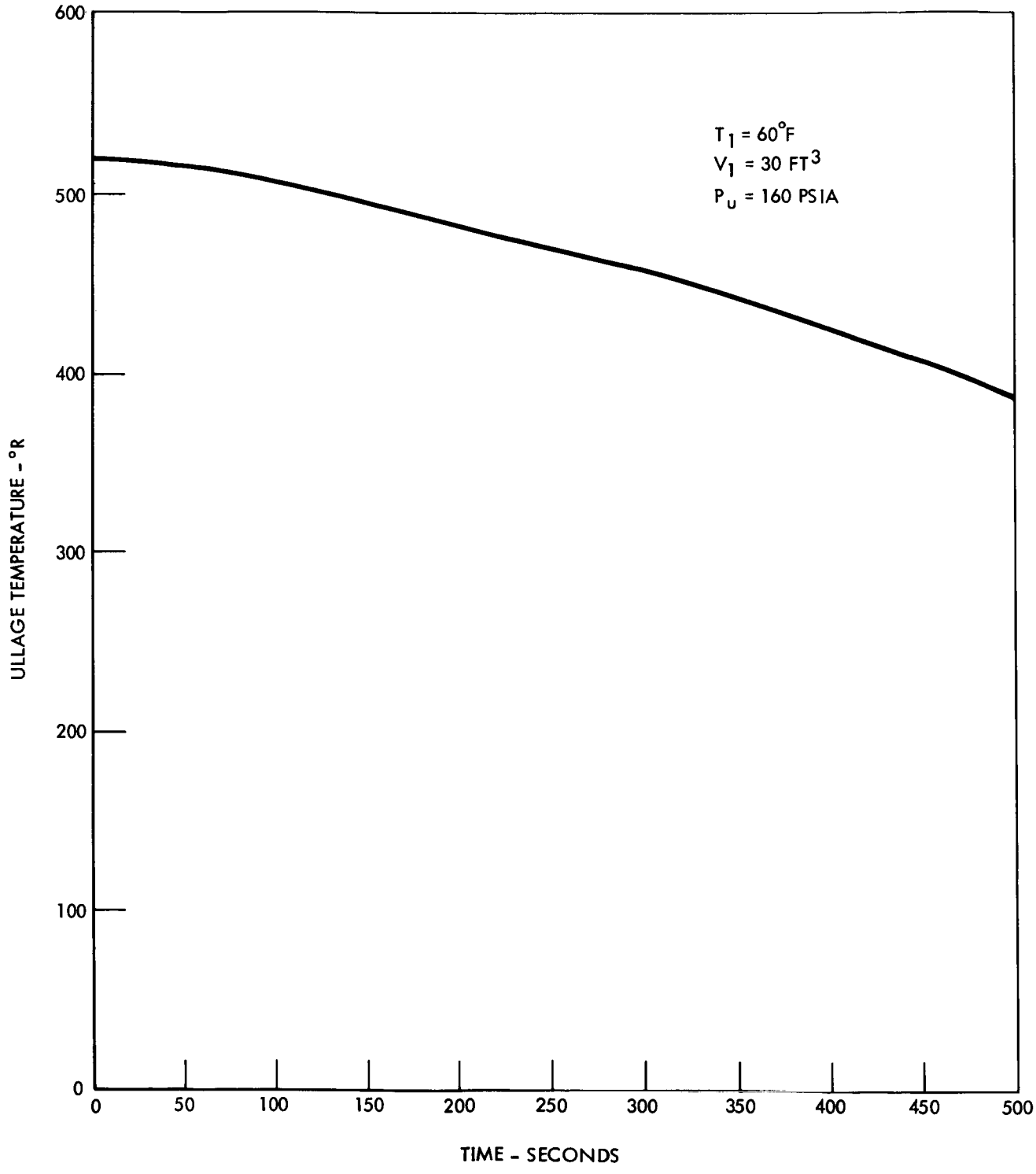

Figure 47. Service Module Main Propulsion System (Sheet 4 of 4)

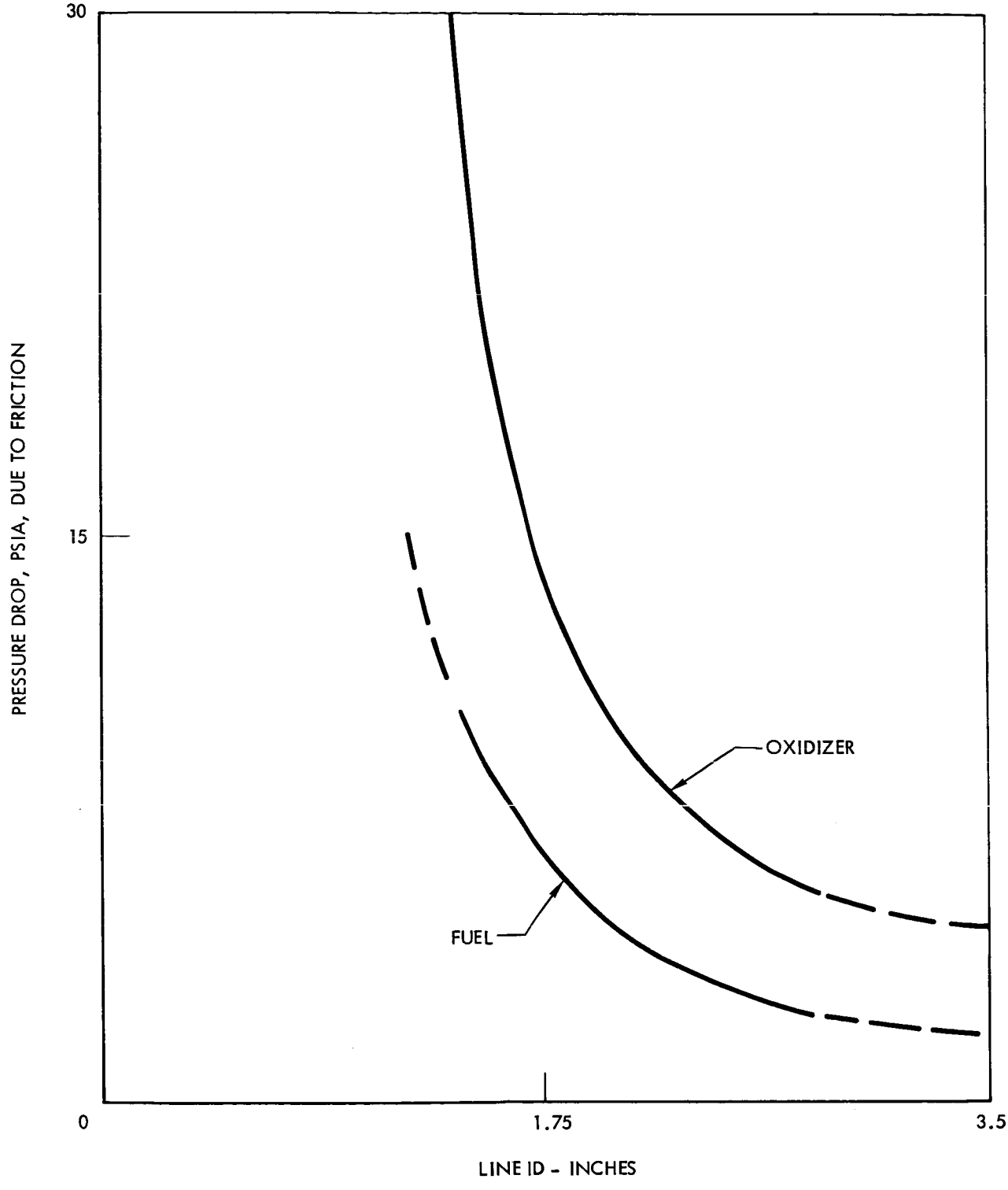

Figure 48. Service Module Main Propulsion System—Pressure Drop Versus Line Size

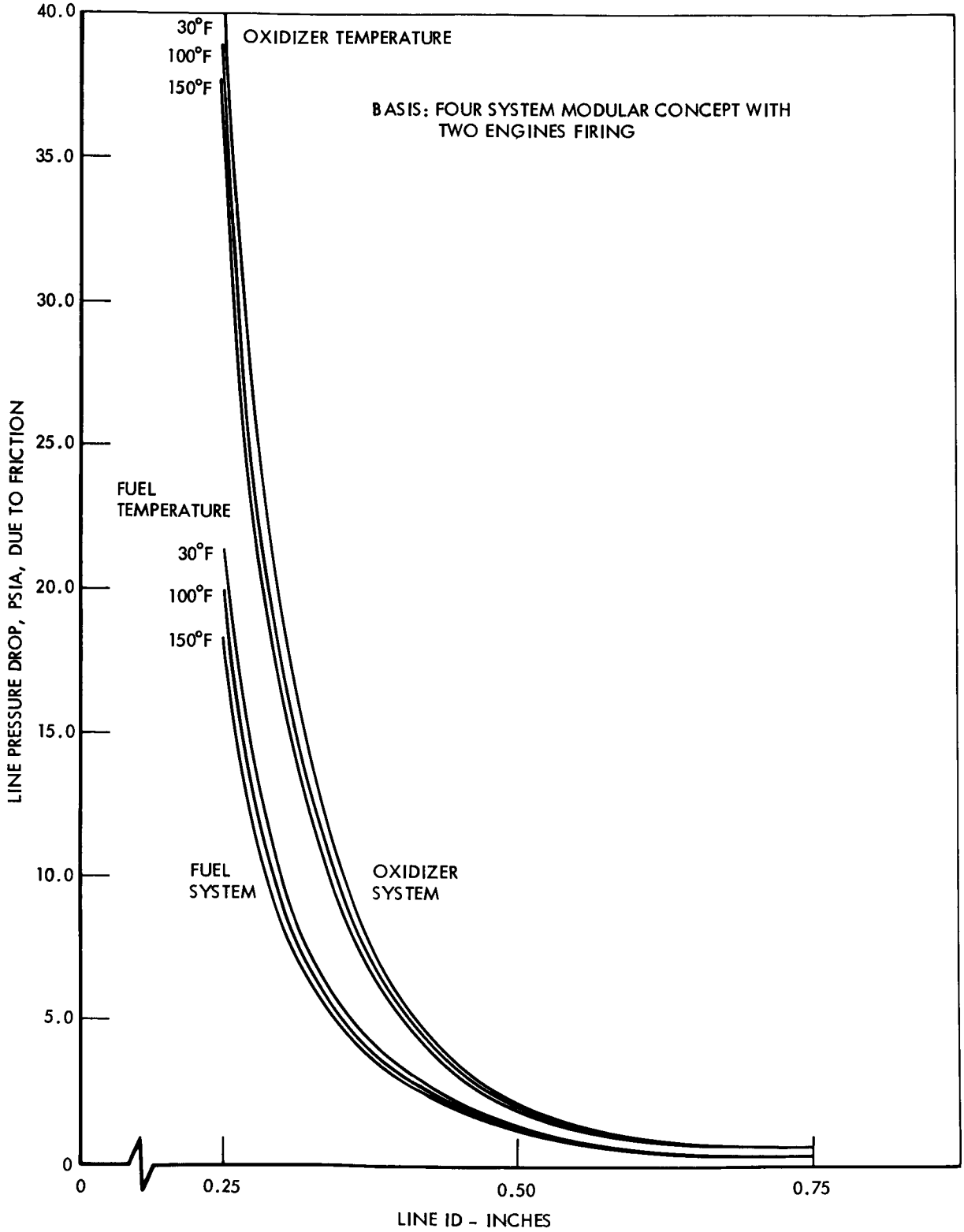

Figure 49. Service Module Reaction Control System—Pressure Drop in Propellant Lines

An analysis has been made of pressure drop for propellant feed system A of the command module RCS. The analysis was based upon maximum propellant flow at 60 F caused by simultaneous firing of three engines delivering 100 pounds of thrust each. Owing to the special layout of the propellant feed system, the maximum flow in either the oxidizer or the fuel feed system varies for the different sections and is dependent upon the geometrical relation between each engine and associated section. For instance, the flow through section DE of the oxidizer feed system, shown in Figure 50, will never be greater than that required to support the firing of the plus-yaw engine. The maximum flow through section CD, however, will be required to support the firing of the plus-yaw and the minus-pitch engines. A similar analysis was made for the maximum flow through each of the sections, and these maximum values are tabulated in Figure 50.

Figures 51 and 52 show the variation of pressure drop with line size for each of the sections. No recommendation of line size is made on the basis of these results because a further consideration of weight of the lines must be made.

The effect of a zero- or low-gravity level environment on Apollo propellants is being investigated. A literature survey has been partially completed; and the problems of propellant location in the tank, tank venting, and propellant closing during zero-gravity conditions due to main engine vectoring transients and attitude control transients are being considered. A zero-gravity status report was published with a number of solutions presented for the above problems.

A study, based on a simplified model of the service module main propulsion system, has been conducted to determine surge pressures at engine shutdown. A 20-foot length of unbranched metal pipe was assumed upstream of the shutoff valve for each of the propellant lines. The valve was considered to have a linear closing characteristic with time. The force in the line at shutdown was computed from the change of momentum of the propellant when brought from normal flow velocity to a complete stop in varying time increments from 0.1 to 0.8 seconds. The pressure was then obtained by dividing the force by the line cross-sectional area. Propellant flow velocities were based upon a 21,500-pound-thrust engine at a mixture ratio of 2. Line diameters are given in Figure 53. More detailed surge calculations being undertaken will consider the effects of actual valve shutdown characteristics, line branching, flexible hose, and compressibility of the propellants.

Rocket Engine Systems

Two preliminary analyses were made of the effects of reentry heating on the fuel temperature in the command module RCS engine cooling coils.

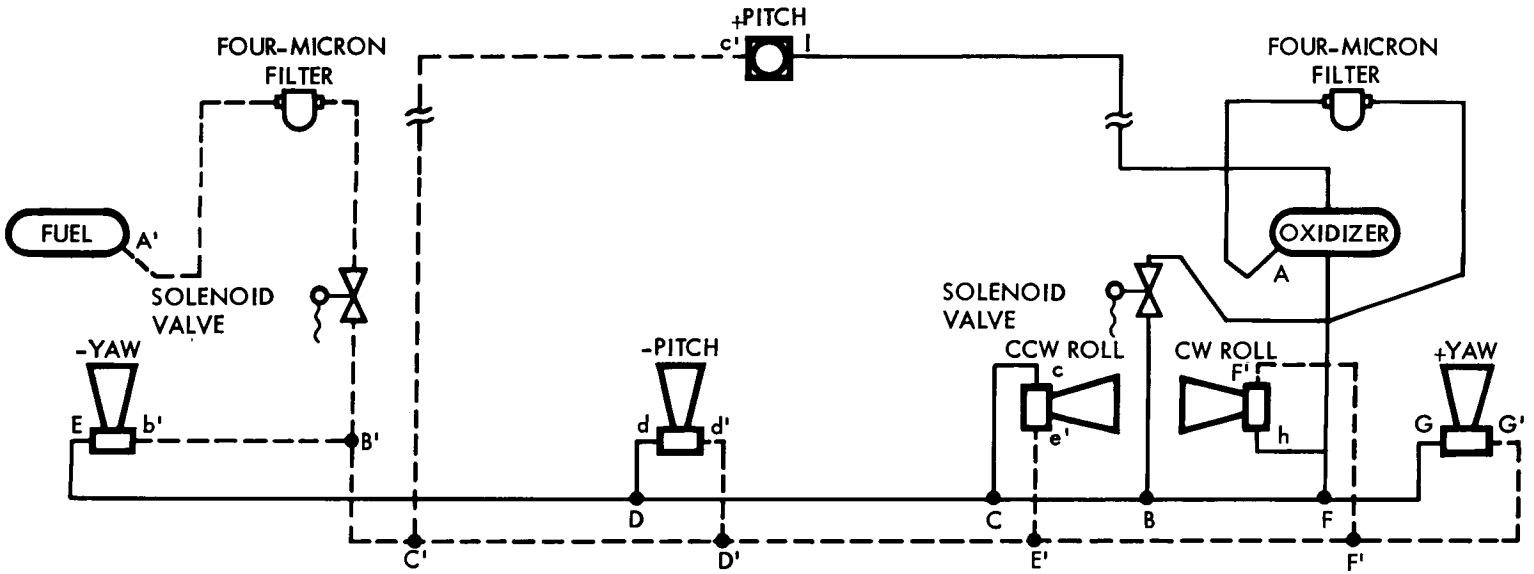

FUEL FEED SYSTEM
ENGINES FIRING TO REQUIRE MAX. FLOW

SECTION	THROUGH SECTION	MAX. FLOW LB/SEC
A'B'C'D'	+YAW, CW ROLL OR CCW ROLL, -PITCH	0.307
D'E'F'	+YAW, CW ROLL	0.205
B'b'	-YAW	0.102
C'c'	+PITCH	0.102
D'd'	-PITCH	0.102
E'e'	CCW ROLL	0.102
F'f'	CW ROLL	0.102
F'G'	+YAW	0.102

OXIDIZER FEED SYSTEM
ENGINES FIRING TO REQUIRE MAX. FLOW

SECTION	THROUGH SECTION	MAX. FLOW LB/SEC
ABC	-YAW, -PITCH, CCW ROLL	0.614
ABF	+YAW, +PITCH, CW ROLL	0.614
CD	-YAW, -PITCH	0.410
FH	+PITCH	0.410
DE	-YAW	0.205
Dd	-PITCH	0.205
Cc	CCW ROLL	0.205
Hh	CW ROLL	0.205
HI	+PITCH	0.205
FG	+YAW	0.205

Figure 50. Command Module Reaction Control System—System A Schematic

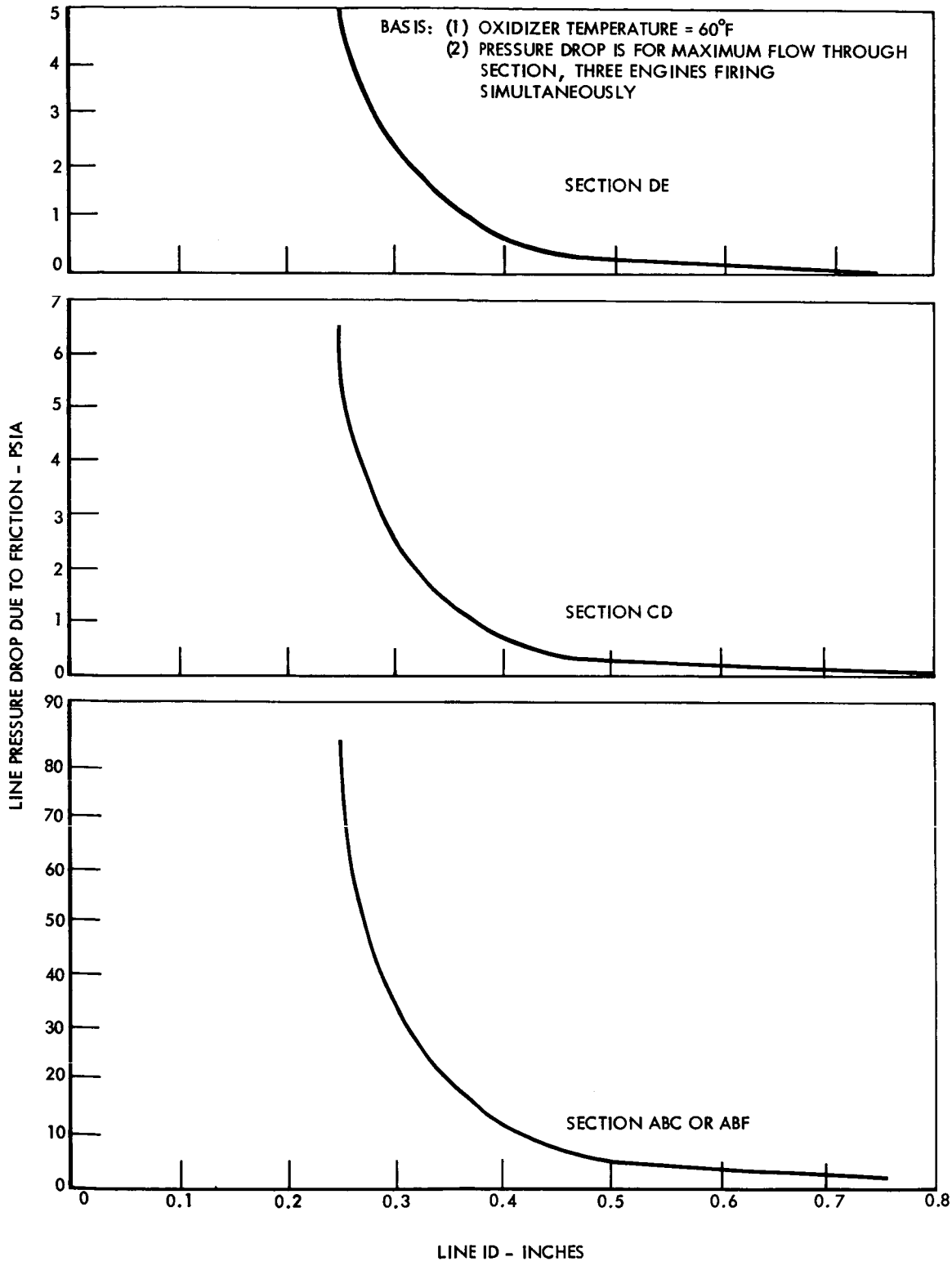

Figure 51. Command Module Reaction Control System—Pressure Drop in Oxidizer Feed System A (Sheet 1 of 2)

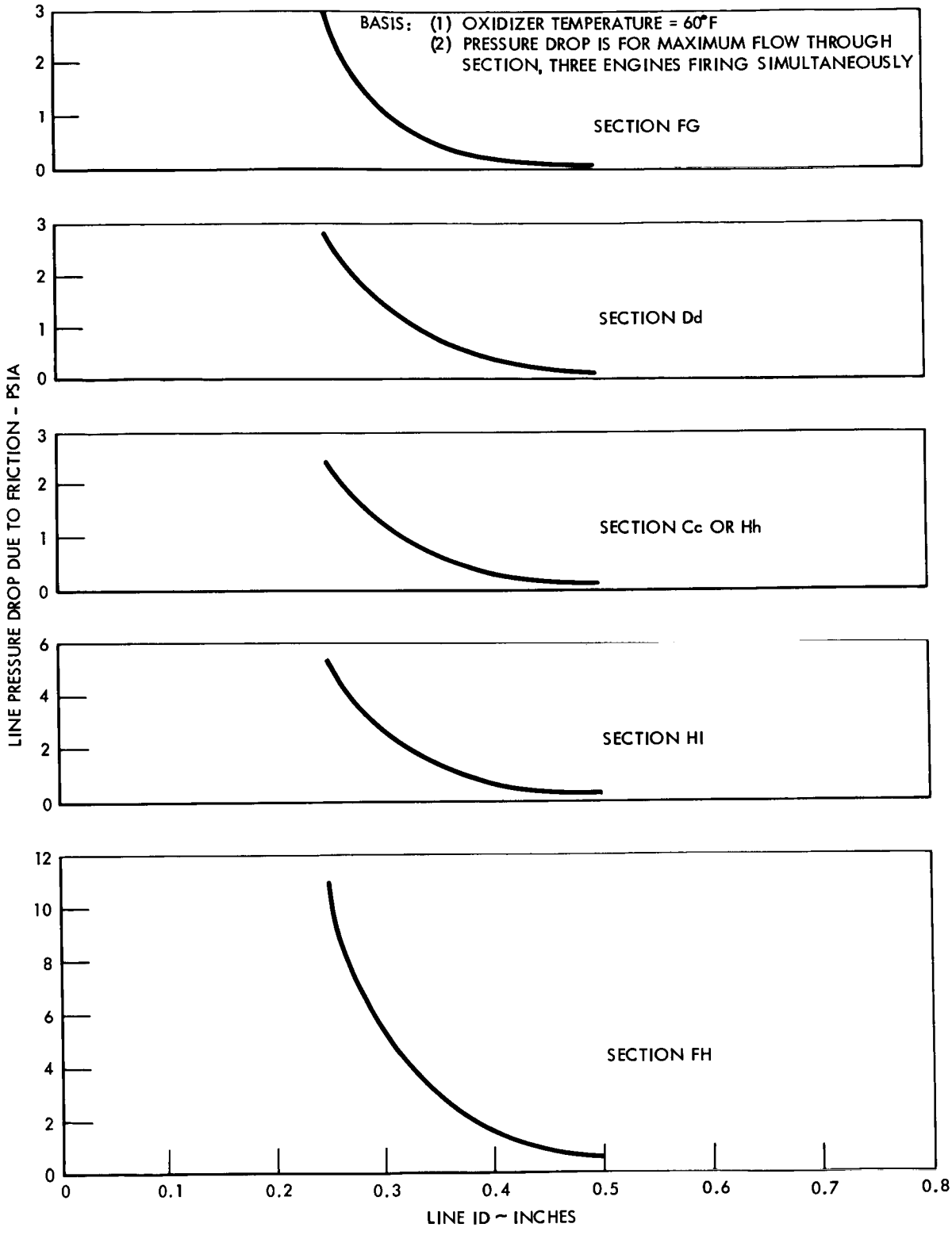

Figure 51. Command Module Reaction Control System—Pressure Drop in Oxidizer Feed System A (Sheet 2 of 2)

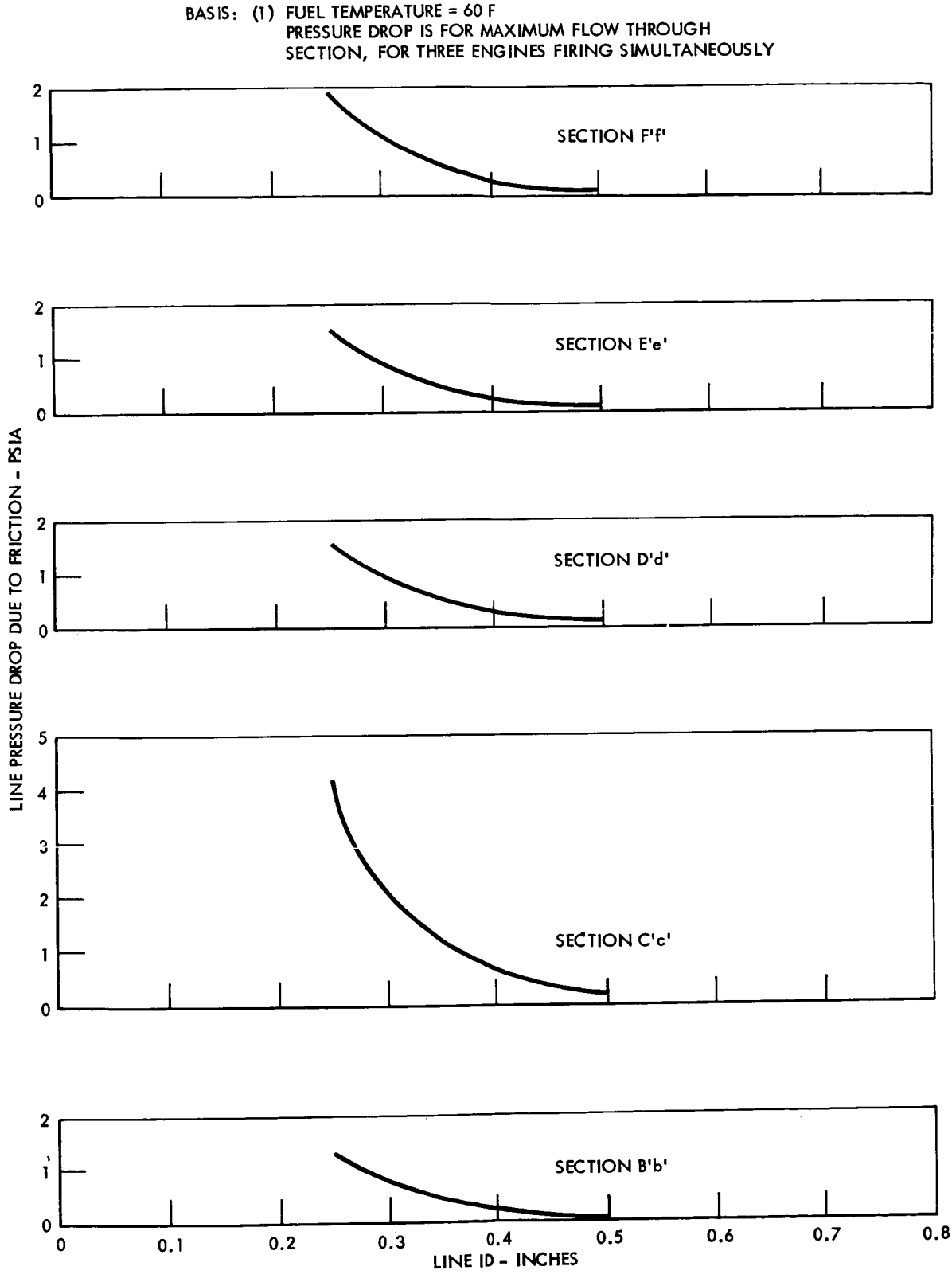

Figure 52. Command Module Reaction Control System—Pressure Drop in Fuel Feed System A (Sheet 1 of 2)

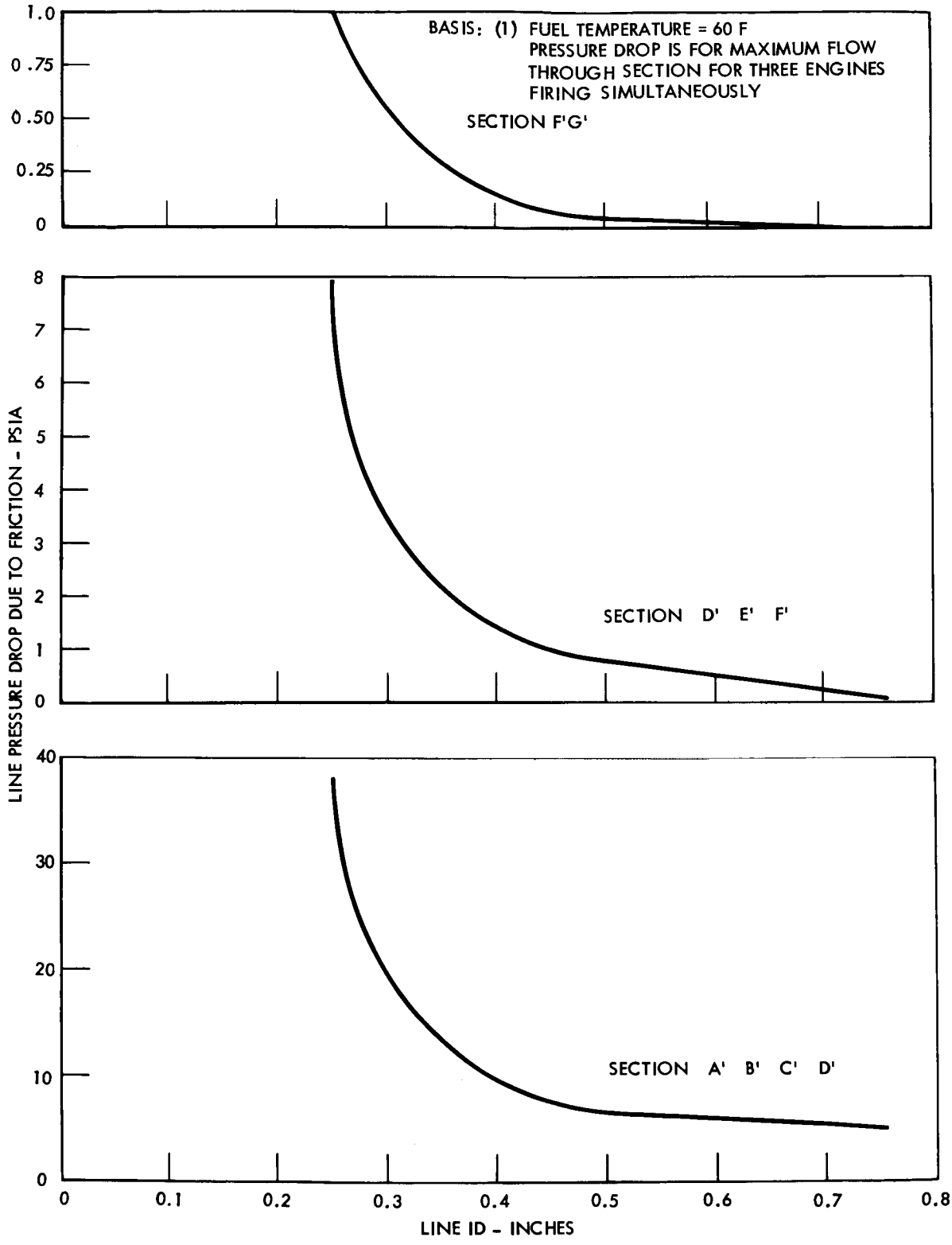

Figure 52. Command Module Reaction Control System—Pressure Drop in Fuel Feed System A (Sheet 2 of 2)

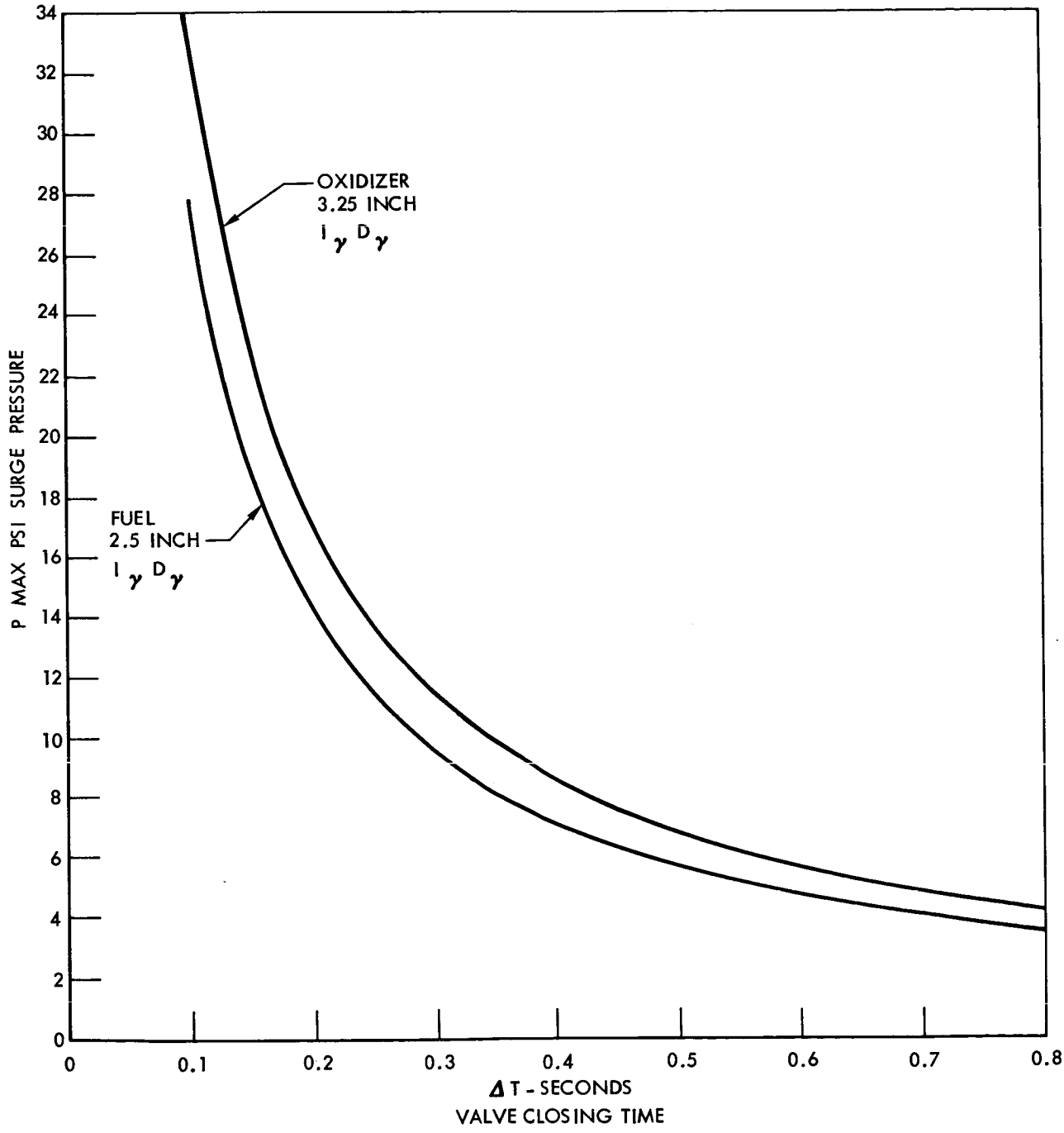

Figure 53. Predicted Surge Pressure

The best available reentry heating values for both the undershoot and overshoot cases were used in these analyses. Although it was necessary to make certain assumptions and a simplified method was used in the analyses, it was felt that the magnitude of the problem could be determined by this method.

The first analysis used only one-third the cooling coil mass as a heat sink (A of Figure 54). The second analysis used the chamber portion shown in Figure 54 and used all the cooling coils as a heat sink. The cooling coil temperatures were then calculated as a function of time. Using the first analysis for all RCS engines, the cooling coil temperature was calculated only for the most severe case (92-degree yaw) using the second approach. The estimated maximum temperatures for each engine location are given in Table 19.

Table 19. Maximum Fuel Temperatures Due to Reentry Heating

Engine	*Location (Deg)	Analysis 1 Cooling Coil Max Temp (F)	Analysis 2 Cooling Coil Max Temp (F)
Yaw	±92	967	485
Yaw	±100	882	
Roll	±110	475	
Roll	±154	638	
Pitch	-176	366	
Pitch	Parachute impingement	360	

*Location in degrees from stagnation point measured from the windward element of the command module (clockwise, positive, counter-clockwise, negative).

From the tabulated temperatures for the 92-degree-yaw engines, it is apparent that a fuel heating problem could exist since the fuel becomes explosive when fuel temperature exceeds approximately 500 F. A reliable maximum fuel temperature is 300 to 400 F.

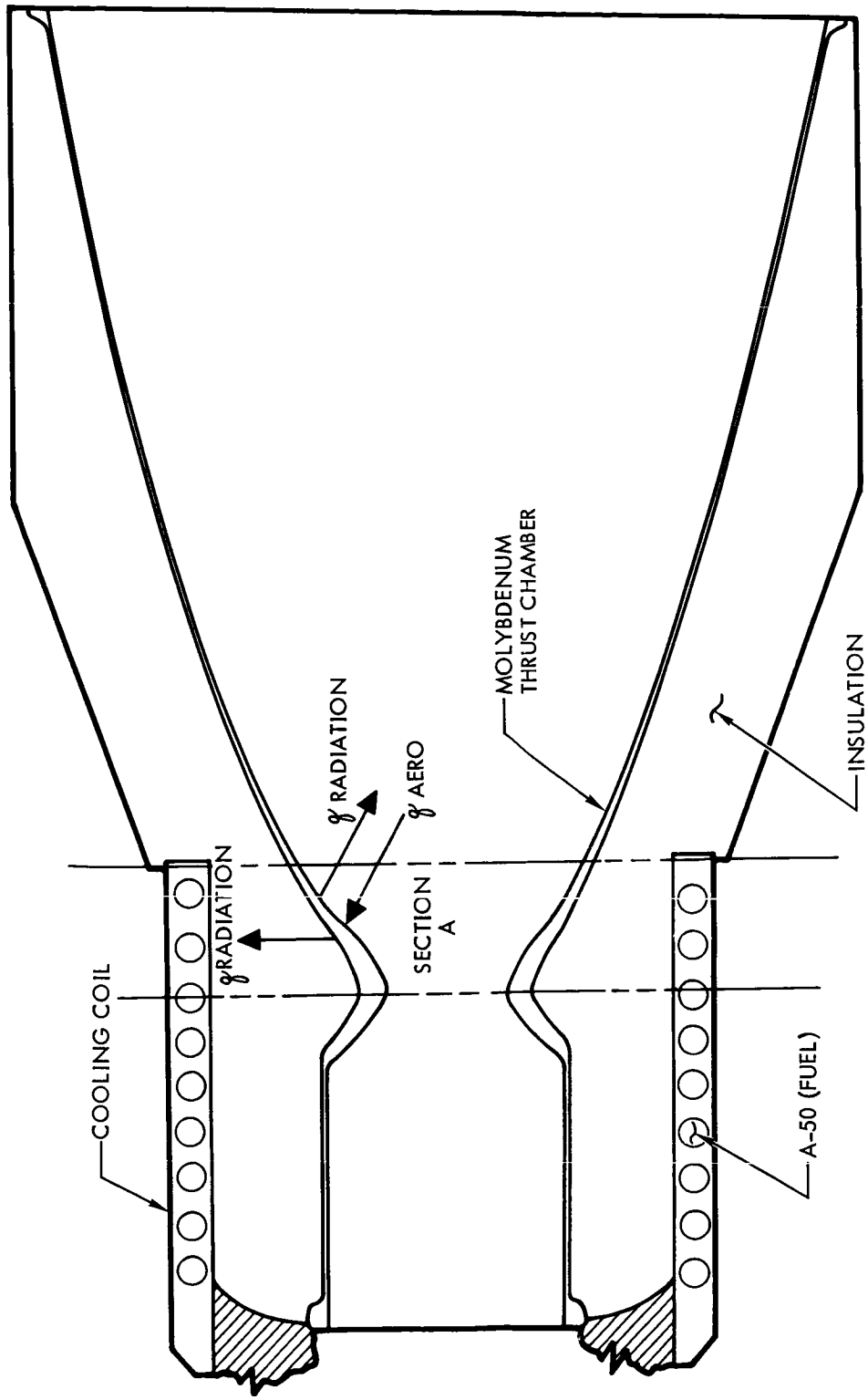

Figure 54. Command Module Reaction Control System Thrust Chamber

[redacted]

Analyses also indicated that a secondary problem may arise due to wall temperatures in the divergent section of the command module RCS engine nozzle. This section of the nozzle is insulated on the exterior and radiates to space through the nozzle exit. The buried installation of these engines in the command module greatly reduces the radiation view factor. This results in high wall temperatures in the divergent portion of the nozzle. Preliminary analysis of the roll engines indicated a temperature of 2860 F at a nozzle area ratio of 5 and a temperature of 2500 F at an area ratio of 40. The 2860 F temperature is slightly in excess of the suggested safe limit of 2800 F and seems to be excessive from a reliability viewpoint.

Because of a possible requirement for another low-thrust RCS engine on the service module, a preliminary study was made of the characteristics and performance associated with such engines. This study indicated that for a thrust level of 5 pounds a cold gas system may be preferable if the total impulse required is less than 1000 pounds per second. Two cold gas systems, nitrogen and helium, were considered in this study.

Preliminary estimates were made of the performance characteristics of the RCS engines during pulse operation. These performance characteristics included on-off signal width, specific impulse, variations between engines, total impulse, thrust rise and decay time, and valve opening times.

An analysis of an 0.085-scale model of the launch escape engine was initiated. This analysis included design calculations on the hydrogen peroxide catalyst pack and the perioxide injector. The silver screen catalyst pack is capable of a 96-percent reaction over a range of hydrogen peroxide flow rates of 6.9 to 13 pounds per second. Calculations were made on a multiple tube-shaped peroxide injector to give even distribution of the peroxide through the catalyst. An analysis of the inlet heating of the peroxide as a function of flow rate was also initiated.

In a comparative analysis of the costs of variable-thrust and constant-thrust liquid propellant rocket engines, it was estimated that the development cost of a variable-thrust engine would be approximately 30 percent greater than for a constant thrust engine. This estimate was based on the use of storable propellants, the use of a pintle-type injector for the variable-thrust engine, and a thrust rating of 20,000 pounds.

The state of the art of variable-thrust engines was investigated. Results of the investigation indicated that a variable area injector was preferred to valve throttling to obtain variable thurst.

A preliminary optimization study of the main propulsion system for the service module was made to determine effects on spacecraft weight and configuration when the nominal basic engine parameter of nozzle expansion

ratio and chamber pressure were varied. To achieve desired accuracy of results and to allow use of the results with future requirements, weight changes were determined on an incremental rather than on an absolute basis. In the parametric study of spacecraft weight changes as a function of engine parameters, the major weight item of the service module included the propellants, pressurization system, structure, engine, and interstage adapter. Limiting boundary conditions were imposed on the results of the studies because of variations in gimbaling requirements and engine sizes with service module spacecraft weight changes. It was also necessary to make a number of assumptions as ground rules for the study.

An optimization study of a service module 22,500 pound thrust propulsion system sized for a lunar lift-off mission resulted in the parametric curves shown in Figure 55. The preliminary values shown in this curve indicate that possible spacecraft weight savings might be achieved by using a higher chamber pressure and nozzle expansion ratio than the base point case. These values are subject to the validity of the assumptions and ground rules that were used. Results of this study will be presented in a forthcoming report.

Interface Systems

The location of the ECS radiators downstream from the service module RCS rockets imposed the problem of mounting the RCS motor in such a way as to minimize the exhaust plume impingement and radiation heating. An analysis of the plume impingement heating on the service module by the RCS motor plume indicated that the service module surface requires heat protection. The results include a flow field diagram and a centerline heat rate distribution. The maximum heating encountered was about 10 Btu per square foot per second.

Flow field assumptions used in the analyses include hyperbolic streamlines, Prandtl-Meyer expansion, and isentropic flow relationships. The plume temperature profile (Figure 56) was checked and used as a first approximation. The flow direction was determined at various points in the flow field by the assumption of hyperbolic streamlines. The flow properties were determined at several points along the service module surface by superimposing a surface on the unobstructed plume. Figure 57 illustrates the heating rate distribution corresponding to the heat transfer analysis. The convection heating rate, the radiation heating rate were considered. A thermal analysis indicated that the heat transfer due to radiation from the exhaust plume was about one Btu per square foot-second. This value was considered a maximum and occurred in the region of the normal shocks.

Figure 57 illustrates the impingement on surfaces and shows the general location of Mach numbers 10, 7, and 6 flow impingement; the

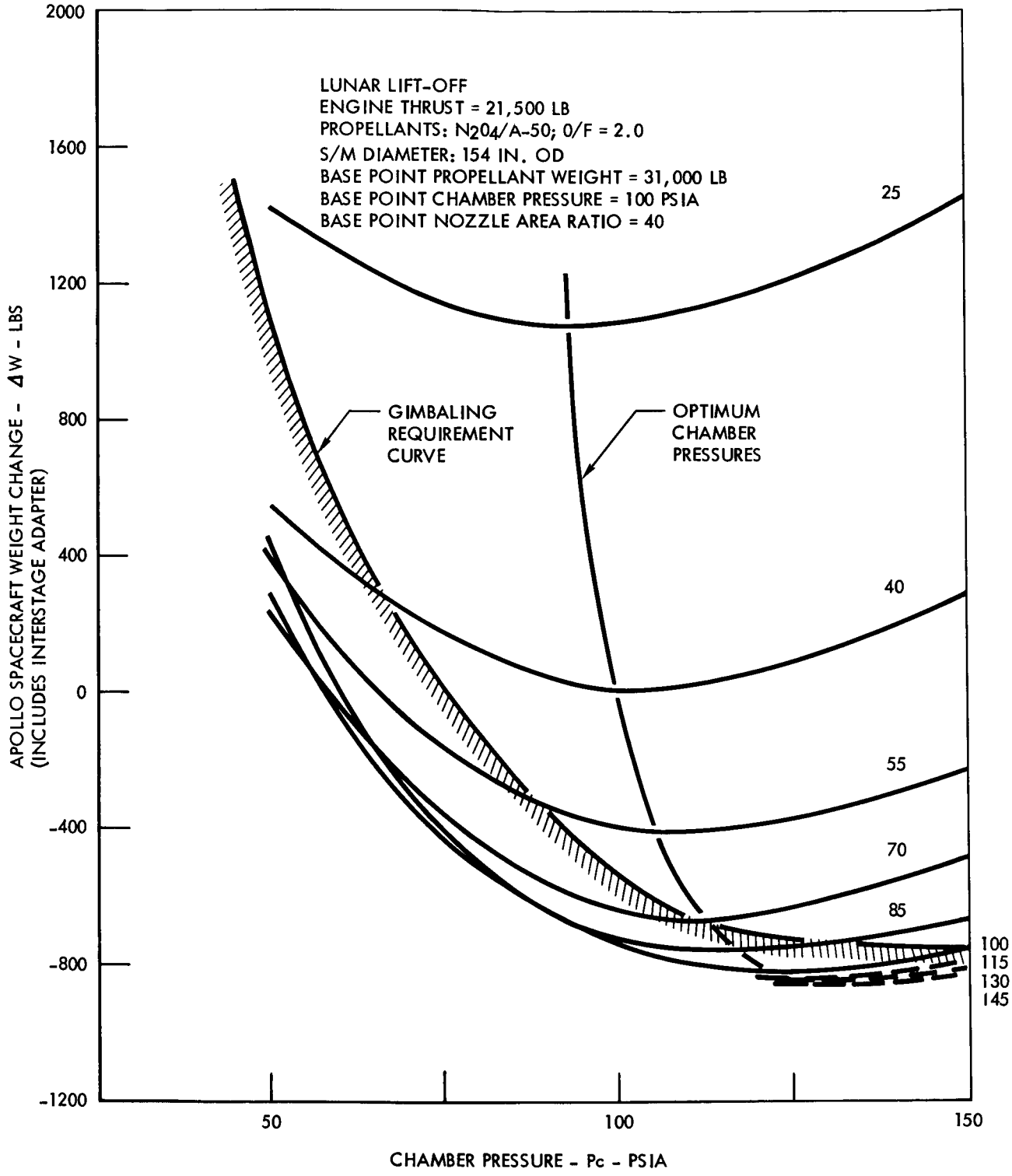

Figure 55. Optimization Study

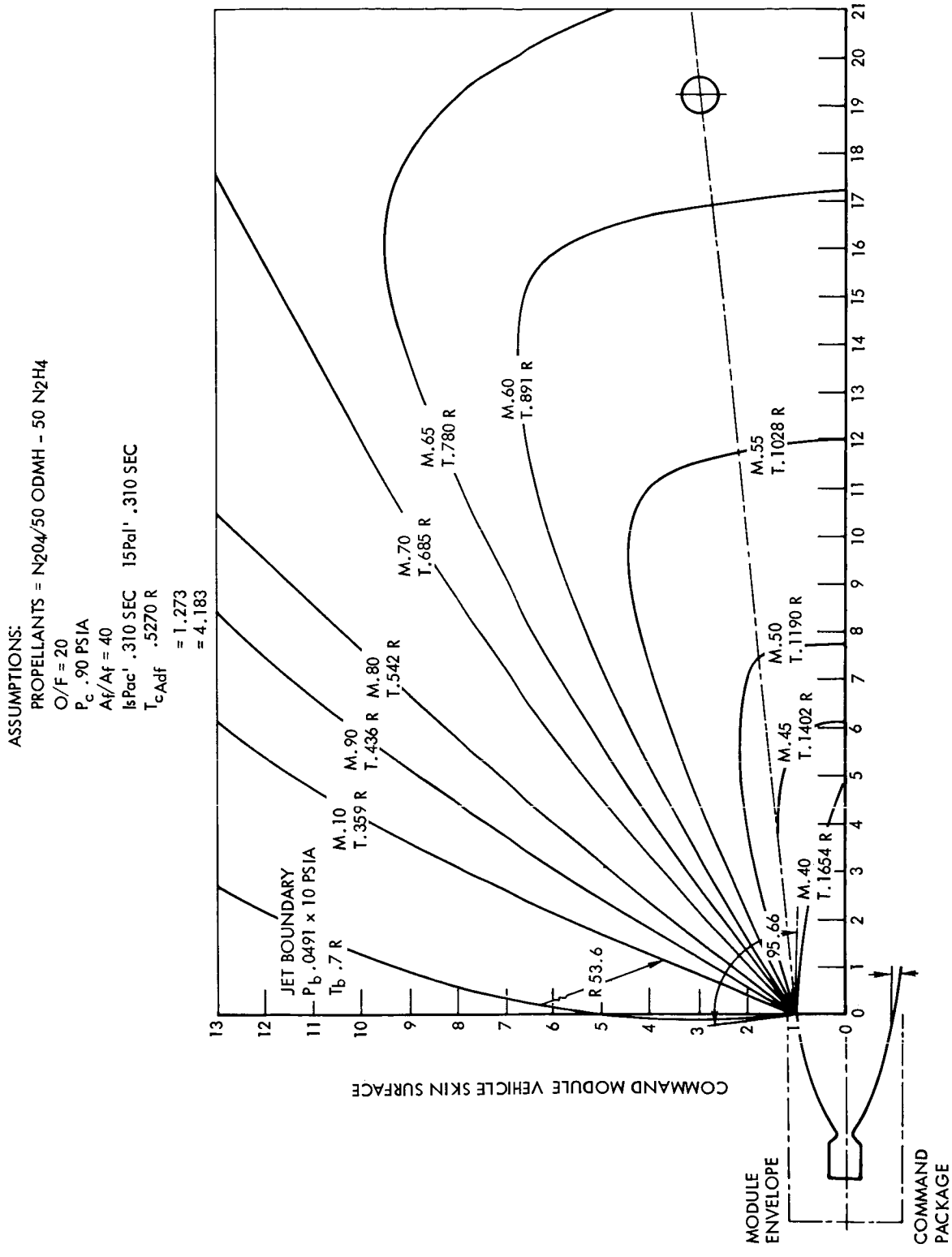

Figure 56. Jet Wake Envelope and Temperature Profile

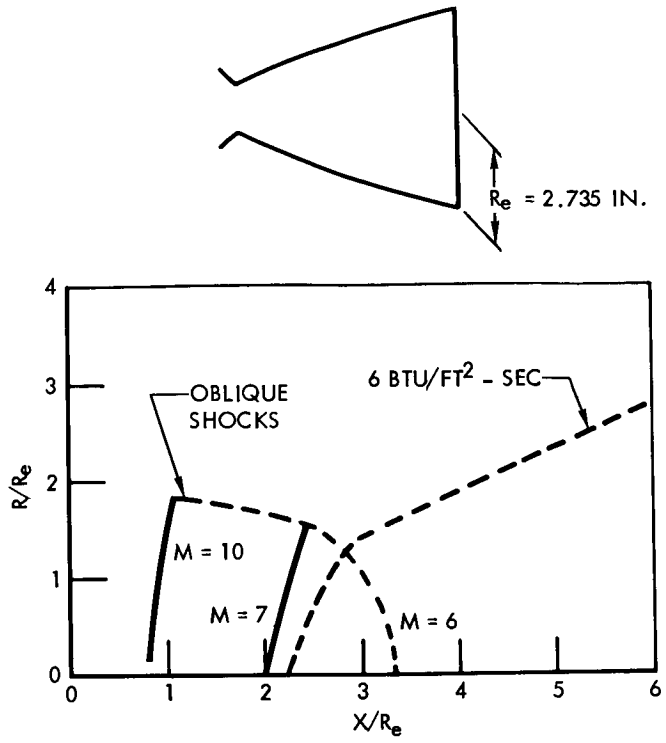

IMPINGEMENT OF CONSTANT PROPERTIES ON SERVICE MODULE SURFACE FROM A DISTANCE OF 3 R_e FROM SERVICE MODULE TO NOZZLE a.
NORMAL SHOCK BOUNDARY ALSO SHOWN

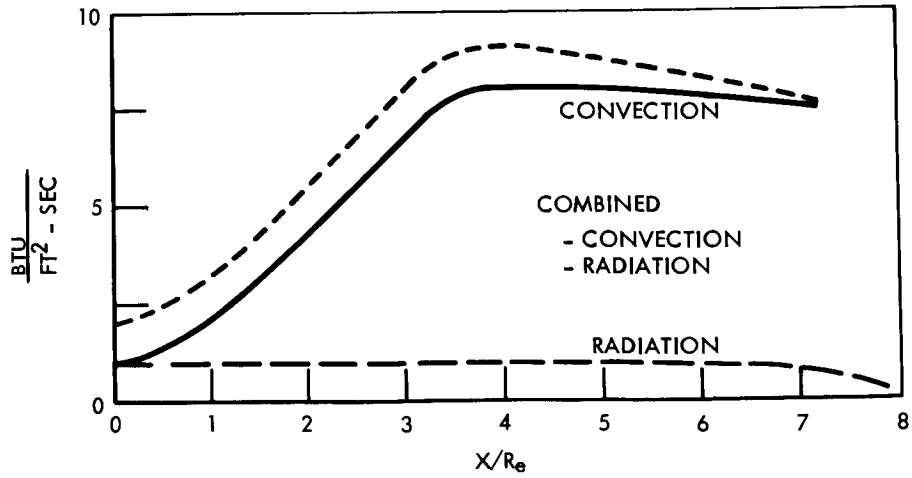

CENTER LINE HEATING RATE DISTRIBUTION FOR CONVECTION AND RADIATION

Figure 57. Service Module Surface Impingement

approximate boundary between the normal and oblique shocks; and the boundary that encloses heating rates greater than 6 Btu per square foot-second from convection and radiation. The centerline heating rate distribution is also shown in Figure 57 to illustrate the concentration of heat predicted in the impingement flow.

Refinements of the heat transfer analysis that are already in progress include an IBM computer program predicting the properties throughout the plume by the method of characteristics, an IBM computer program predicting the properties throughout the plume, empirical methods which can incorporate the results the plume testing for predicting surface heating, and detailed parametric test studies of the service module RCS plume and impingement. Both IBM computer programs are nearing the checkout stage. Exhaust plume profiles from these programs will be compared to determine the effect of different theoretical assumptions. One or both of the profiles will be used to predict the heating in the region near the nozzle exit.

The heating rates released to date are for the region of the nozzle exit and downstream of the nozzle to only three exit diameters. Empirical methods are being derived to incorporate flow impingement test data for predicting the heating rates further downstream.

A study was initiated to evaluate the capabilities of existing test facilities to simulate near space environment with an operating RCS rocket motor. This study showed that few vacuum chambers are capable of producing a vacuum of 10^{-4} mm Hg (space is on the order of 10^{-16} mm Hg). Only the AEDC J2A vacuum cell at Tullahoma, Tennessee, can handle the 0.30 pounds per second of hypergolic propellant for enough time to gather the required test information.

The boundary of the exhaust plume must be reproduced so that the shock pattern on the service module surface will be simulated. Because of the great difference between the vacuum cell capabilities and the actual space environment, some of the rocket motor parameters must be varied to achieve a space plume simulation. These parameters are the nozzle area ratio and nozzle exit angle. A simulation study was initiated assuming that if the initial inclination angle of the exhaust flow issuing from the nozzle exit could be reproduced, the plume boundary would be simulated. It was further assumed that the testing of several nozzle angles and/or area ratio configurations giving the same initial inclination angle would give results that can be extrapolated to the actual case.

A test program is being set up to gain preliminary data on the plume surface heating of the RCS service module. This program will use a vacuum cell capable of 10^{-4} mm Hg with a rocket motor flow rate of 0.05 pounds per second. The working fluid will be steam heated by hydrogen-oxygen

combustion. Area ratios and nozzle exit angles have been selected to produce an initial inclination angle similar to that expected for the actual rocket motor in space.

Two analyses were performed to determine the LES rocket exhaust plume impingement flow properties on the command module and tower. This information was used to calculate the heating rates. Impingement could occur at all altitudes up to about 250,000 feet, where the tower is jettisoned. Geometry of the system is given in Table 20 for a nozzle cant angle of 33 degrees, an area ratio of 10:1, a throat diameter of 5.03 inches and a nozzle half angle of 17 degrees. For the 19-degree cant angle, critical impingement occurred on the command module at sea level. The heating rate calculated from the exhaust plume flow properties was of the order of 1000 Btu per square foot per second. This high heat input was a factor in the change to the nozzle cant angle of 33 degrees, and a more complete analysis was made for the impingement at flow properties for this configuration. Table 20 gives the impingement flow properties at five locations along the tower and command module.

Table 20. Plume Properties at Five Locations Downstream of the Nozzle Axis

Location	M	T (Deg R)	P (psia)	Alt (1000 ft)
A	3.48	2110	16.8	0
B	4.09	1740	5.85	20
C	4.42	1570	3.35	40
D	4.57	1520	2.60	50
E	4.54	1500	2.68	50

T_c = 5050° R

P_c = 1800 psia Chamber Total

Fire for 2.5 sec = 1.23

Mass flow = 270 lb/sec for each nozzle

An analysis was performed to determine the order of magnitude of the moments about the gross center of gravity of the LES command module caused by LES plume impingement on the tower. The resulting moment was of the order of 200,000 inch-pounds. There was no torque about the axis of symmetry, and all yaw moments cancel.

Only the upper bay of the 120-inch tower was considered for drag computation. The configuration illustrates the revised V-shaped cross members. The V section and the horizontal cross member were considered identical for each side.

After a check of the impingement effects at various altitudes, the drag forces were considered most critical for the sea-level impingement case.

The exhaust plume boundary was calculated through the use of an IBM 7090 plume program. The assumption of constant properties in the plume cross section gives a conservative dynamic pressure near the plume boundary. In all cases, impingement occurred near the plume boundary.

[redacted]

INSTRUMENTATION

CONTROLS AND DISPLAYS

Backup entry display system development has been started. The first phase of the program is the assembly of a computer, a controller, a display unit, and a power supply for use as a design tool. The computer has been adapted to simulate the entry equations and has been used with an X-Y plotter and a stick controller for demonstration at NASA and S&ID.

A block diagram (Figure 58) describes a typical integrated optical display.

TV DISPLAY

A spacecraft TV display will be provided to permit viewing of the TV camera outputs. This provision may include closed circuit operation, transmission to earth, or display of radio landing aids. Controls will be provided for obtaining brightness, contrast, and selection of display inputs.

TIME DISPLAY

Three digital readout time displays will be provided for universal-time, time-to-event, and time-from-event functions.

MAIN DISPLAY CONSOLE

Analysis of the display console structure and of the isolation requirements revealed that approximately 14 isolators are needed to attach the console to the crew compartment structure, the estimated isolated weight for each isolator being 20.5 pounds or a total suspended console weight of 287 pounds. Each isolator weighs at least 5 pounds and occupies about 65 cubic inches, the total isolation system weight being 70 pounds and 910 cubic inches. In addition to the weight and space penalties associated with the isolation system itself, free sway space of 0.3 inches forward, 2.5 inches aft, and 0.4 inches radially is required to permit unimpaired deflection of the display console. The problems of designing sufficient extension and flexibility into the coldplate plumbing and wire bundles linking the isolated console to the crew compartment structure are critical.

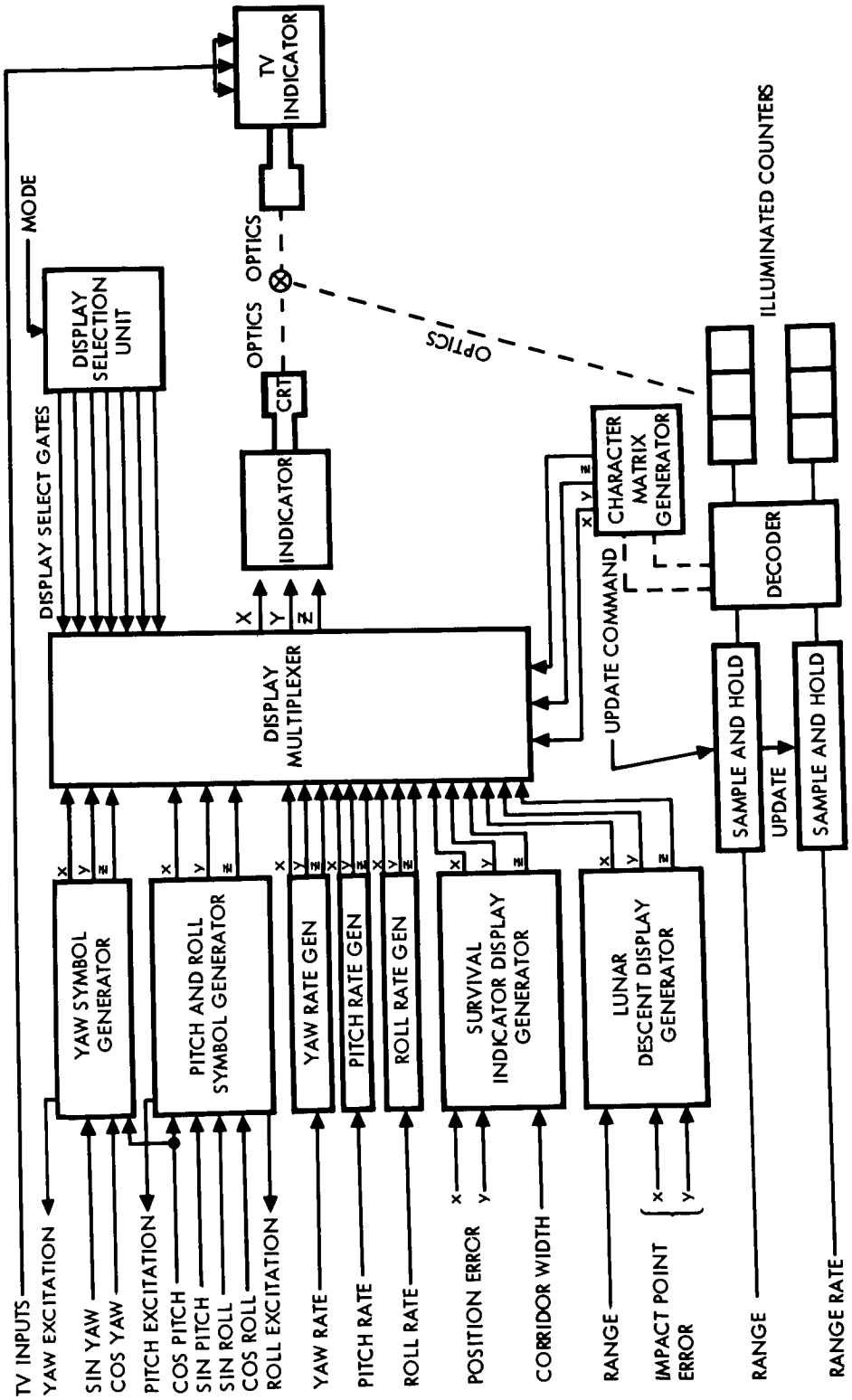

Figure 58. Apollo Integrated Optical Display—Block Diagram

STABILIZATION AND CONTROL

PRELIMINARY DEFINITION OF THE REQUIRED STABILIZATION AND CONTROL (SCS) OPERATING MODES

In making a preliminary definition of the required SCS operating modes, it was necessary to consider the operational requirements and a proposed thrust utilization schedule.

The SCS operational requirements (attitude control, translation control, velocity vector control, and separation thrust provisions) were analyzed for each phase of the earth-orbit, circumlunar, lunar-orbit, and lunar-landing missions.

From the SCS operational requirements, the thrust utilization list was formulated.

From the SCS operational requirements and the thrust utilization list, the SCS mode description was formulated. Each SCS mode can be identified by a relatively simple block diagram. The majority of the 12 SCS modes defined use much the same equipment. In the design stages, the 12 SCS modes will be combined in a single block diagram, the various modes being selected by appropriate switching.

ENTRY STABILIZATION AND CONTROL SYSTEM

An analysis based upon the theory of small perturbation has led to the definition of a preliminary entry control system. Analog computer investigations have confirmed the validity of the assumptions and data are being reduced concerning the response characteristics of the vehicle, the firing and fuel consumption characteristics of the reaction jets, and the fuel costs for performing a broad class of step-command roll maneuvers.

Three small perturbation assumptions are used in the analysis: the vehicle is assumed to be close to trim attitude; the aerodynamic moments acting upon the vehicle are small; and the angular rates of the vehicle are small. Impressing the above assumptions upon the vehicle moment equations written along body-fixed axes (origin at the center of mass, the X axis parallel to the "axis" of symmetry, the XZ plane lying in the plane of symmetry, and the Y axis along with the X and Z axes forming a right handed orthogonal set of axes) yields

$$\begin{pmatrix} Lc \\ Mc \\ Nc \end{pmatrix} = \begin{pmatrix} I_{xx} & 0 & I_{xz} \\ 0 & I_{yy} & 0 \\ I_{xz} & 0 & I_{zz} \end{pmatrix} \begin{pmatrix} \overset{o}{p} \\ \overset{o}{q} \\ \overset{o}{r} \end{pmatrix} \tag{1}$$

The transformation relating the body axis angular acceleration $\overset{o}{p}$, $\overset{o}{q}$, $\overset{o}{r}$ to the stability axis angular accelerations $\overset{o}{p}s$, $\overset{o}{q}s$, $\overset{o}{r}s$ is

$$\begin{pmatrix} \overset{o}{p} \\ \overset{o}{q} \\ \overset{o}{r} \end{pmatrix} = \begin{pmatrix} \cos\alpha_t & 0 & -\sin\alpha_t \\ 0 & 1 & 0 \\ \sin\alpha_t & 0 & \cos\alpha_t \end{pmatrix} \begin{pmatrix} \overset{o}{p}s \\ \overset{o}{q}s \\ \overset{o}{r}s \end{pmatrix} \tag{2}$$

Substitution of equation 2 into 1 yields

$$\begin{pmatrix} Lc \\ Mc \\ Nc \end{pmatrix} = \begin{pmatrix} I_{xx}\cos\alpha_t + I_{xz}\sin\alpha_t & 0 & -I_{xx}\sin\alpha_t + I_{xz}\cos\alpha_t \\ 0 & I_{yy} & 0 \\ I_{xz}\cos\alpha_t + I_{zz}\sin\alpha_t & 0 & -I_{xz}\sin\alpha_t + I_{zz}\cos\alpha_t \end{pmatrix} \begin{pmatrix} \overset{o}{p}s \\ \overset{o}{q}s \\ \overset{o}{r}s \end{pmatrix} \tag{3}$$

or

$$\begin{pmatrix} Lc \\ Mc \\ Nc \end{pmatrix} = \begin{pmatrix} a_{11} & 0 & a_{13} \\ 0 & a_{22} & 0 \\ a_{31} & 0 & a_{33} \end{pmatrix} \begin{pmatrix} \overset{o}{p}s \\ \overset{o}{q}s \\ \overset{o}{r}s \end{pmatrix} \tag{3a}$$

taking the inverse of the (a) matrix above yields

$$\begin{pmatrix} \overset{o}{p}_s \\ \overset{o}{q}_s \\ \overset{o}{r}_s \end{pmatrix} = \begin{pmatrix} b_{11} & 0 & b_{13} \\ 0 & b_{22} & 0 \\ b_{31} & 0 & b_{33} \end{pmatrix} \begin{pmatrix} L_c \\ M_c \\ N_c \end{pmatrix} \qquad (3b)$$

where: $(a)^{-1} = (b)$

It is noted from equation 3b that motions about the roll and yaw axes are coupled, and that motion about the pitch axis is uncoupled. Since roll response around the stability axis is of major importance, attention is focused upon the roll and yaw equations.

From equations 3, 3a, and 3b, it is noted that the coefficients b_{11}, b_{13}, b_{31}, and b_{33} are functions of the inertias and trim angle of attack only.

Substitution of preliminary inertia and trim angle of attack values yields

$$\begin{pmatrix} \overset{o}{p}_s \\ \overset{o}{r}_s \end{pmatrix} = 10^{-3} \begin{pmatrix} 0.166 & -0.125 \\ 0.118 & 0.222 \end{pmatrix} \begin{pmatrix} Lc \\ Nc \end{pmatrix} \qquad (4)$$

Where $\overset{o}{p}_s$ = roll angular acceleration about stability axis, rad/sec^2

$\overset{o}{r}_s$ = yaw angular acceleration about stability axis, rad/sec^2

L_c = reaction jet moment about roll body axis, $ft\text{-}lb_f$

N_c = reaction jet moment about yaw body axis, $ft\text{-}lb_f$

Under the assumption that the reaction jet thrusts are 100 pounds and that reaction jet moment arms are 5.17 feet, the on-off control torques have values of 517 $ft\text{-}lb_f$.

Thus

$$L_c = \begin{cases} +517 \text{ ft-lb} \\ 0 \\ -517 \text{ ft-lb} \end{cases} \qquad (5)$$

$$N_c = \begin{cases} +517 \text{ ft-lb} \\ 0 \\ -517 \text{ ft-lb} \end{cases}$$

If we express $\overset{o}{p}s$ and $\overset{o}{r}s$ in terms of deg/sec^2, we obtain

$$\begin{aligned} \overset{o}{p}s &= 10^{-3} \ (57.3) \ (1.66 L_c - 0.125 N_c) \\ rs &= 10^{-3} \ (57.3) \ (0.118 L_c + 0.222 N_c) \end{aligned} \qquad (6)$$

There are nine possible combinations of thrust from equation (5) if we consider these nine possible values of thrust, we obtain nine sets of values for $\overset{o}{p}s$ and $\overset{o}{r}s$, as shown in Table 21.

Table 21. Possible Values of Dynamic Variables

Condition	Lc (ft-lb)	Nc (ft-lb)	$\overset{o}{p}s$ (deg/sec^2)	$\overset{o}{p}s$ (deg/sec^2)	$\frac{dp}{dr}$	$\sqrt{\overset{o}{p}s^2 + \overset{o}{r}s^2}$
1	+517	+517	1.21	10.05	0.1152	10.01
2	+517	0	4.92	3.50	1.405	6.03
3	+517	-517	8.62	-3.08	-2.82	9.14
4	0	+517	-3.70	6.58	-0.562	7.55
5	0	0	0	0		0
6	0	-517	3.70	-6.58	-0.562	7.55
7	-517	+517	-8.62	+3.08	-2.82	9.14
8	-517	0	-4.92	-3.50	1.405	6.03
9	-517	-517	-1.21	-10.05	0.1152	10.1

The constants a and b, command coupling terms of Figure 59 were found to be necessary in a previously documented analysis (which assumed proportional instead of on-off reaction jets) and were originally included here for generality. Inclusion of these terms can be justified by an argument assuming the validity of equation that proves optimum value of a and b exist which yield absolute minimum fuel consumption when the system is given step-type roll rate and yaw rate commands simultaneously. Either command can be zero.

If we assume p_{s_c} = constant, r_{s_c} = constant (an analysis of system performance for step commands).

then

$$\left.\begin{aligned} \overset{o}{p}_s &= -\frac{d}{dt}(p_{s_c} - ps) \\ \overset{o}{r}_s &= -\frac{d}{dt}(r_{s_c} - rs) \end{aligned}\right\} \qquad (7)$$

From Figure 59, it is seen that

$$\begin{aligned} \epsilon_1 &= (p_{s_c} - p_s) + a(r_{s_c} - rs) \\ \epsilon_3 &= b(p_{s_c} - ps) + (r_{s_c} - r_s) \end{aligned} \qquad (8)$$

Figure 59 shows that $_1$ and L_c, ϵ_3 and N_c are related simply as functions of h_1, h_2, h_3, and h_4. Equations 7, 8, and Table 21 are the relationships which are used in determining the optimum values of "a" and "b". These relationships can be used to deduce the performance of the system for step rate commands. Figure 60 presents the convergence paths in the $(p_{s_c} - p_s)$, $(r_{s_c} - r_s)$ plane from various arbitrary points for optimum values of a and b.

If we assume that a and b are constants, then an argument can be presented that shows that to force the $(p_{s_c} - p_s)$, $(r_{s_c} - r_s)$ points to the dead zone using minimum fuel requires that

1. The slope of the $\epsilon_1 = 0$ line in Figure 60 should be equal to -0.562 (the value of $\overset{o}{p}_s/\overset{o}{r}_s$ for $L_c = 0$, $N_c = +517$ ft-lb).

2. The slope of the $\epsilon_3 = 0$ line in Figure 60 should be equal to +1.405 (the value of $\overset{o}{p}_s/\overset{o}{r}_s$ for $L_c = +517$ ft-lb, $N_c = 0$).

Applying the above values to equation 5 yields that optimum values for a and b (which minimize fuel consumption for step rate commands).

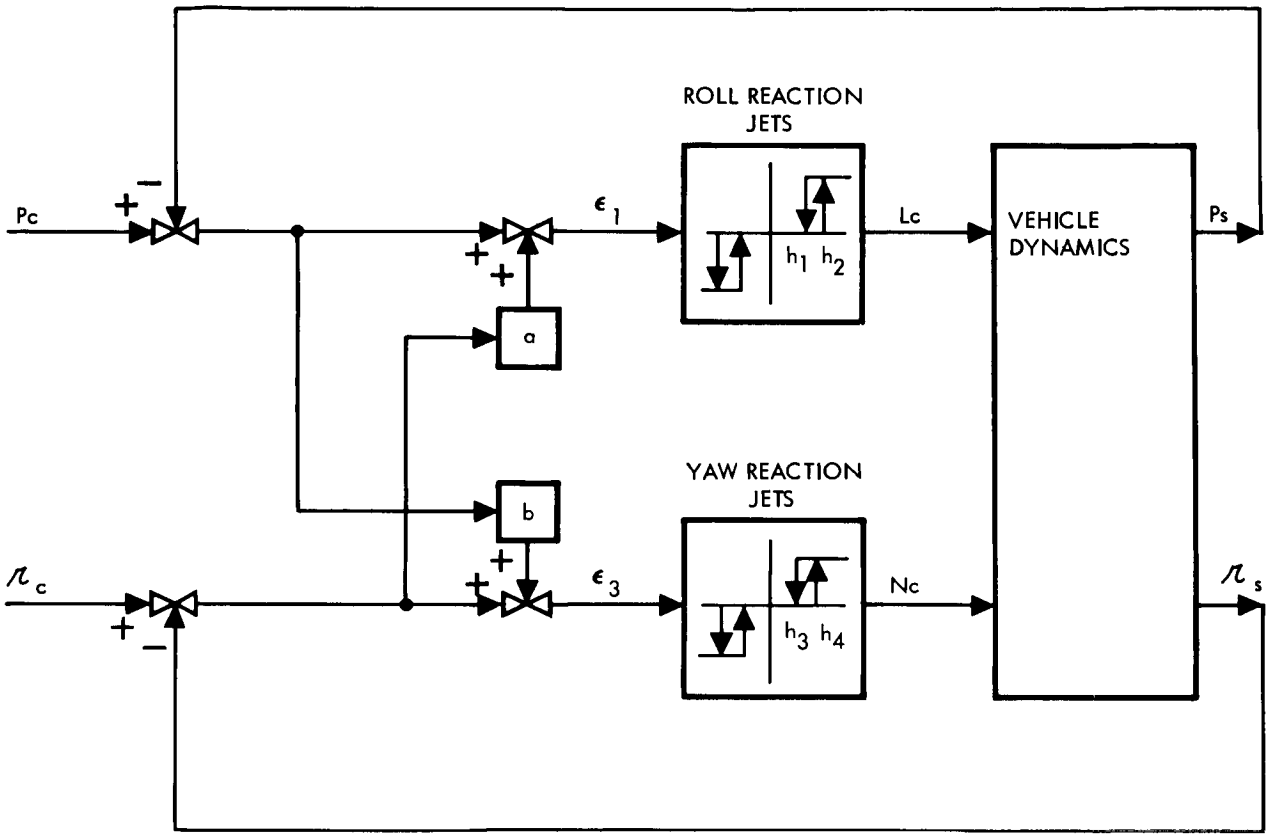

Figure 59. Proposed Control System Inner Loop—Block Diagram

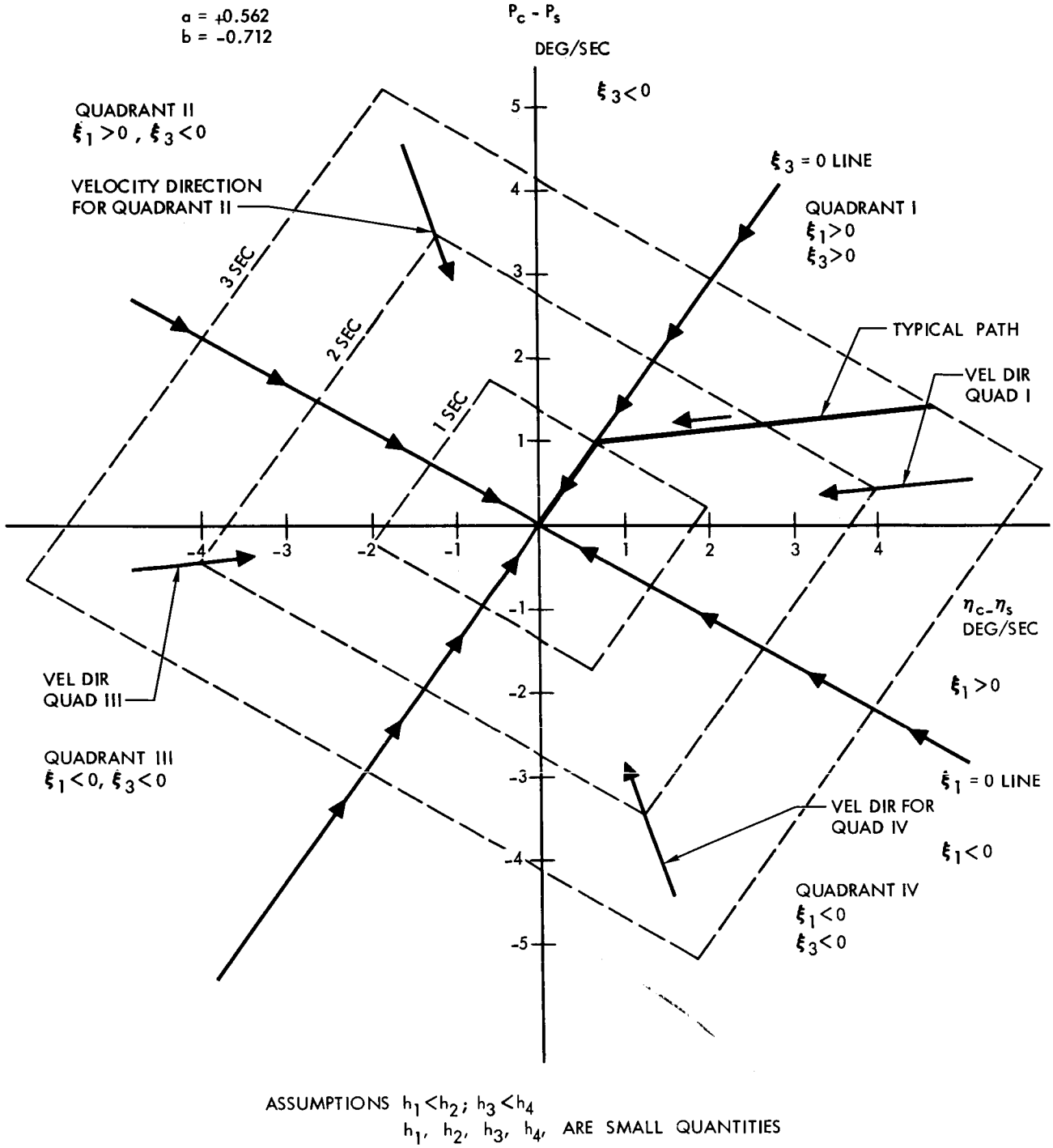

Figure 60. Convergence Paths for Step Rate Command: a = 0.562, b = 0.712

Three considerations have led to the selection of the proposed outer loop configuration:

In general, there are two levels of performance required: high angular rates are required for the pull-out condition and for range maneuvers. (When the proper lateral range maneuvers have been accomplished, the vehicle will be required to orient at alternate positive and negative roll angles to hold the cross-range target while maneuvering the vehicle for down-range control). Low angular rates are required for damping and stabilizing the vehicle during reentry and for making small attitude changes for range control.

Fuel consumption is directly related to changes of angular velocity. For vehicles accelerated by reaction jets about principal moments of inertia axes,

$$\Delta\dot{\theta} = \left(\frac{I_{sp}\,\ell}{J}\right) Wf \qquad (9)$$

where $\Delta\dot{\theta}$ = change of angular velocity, rad/sec

I_{sp} = specific impulse sec

ℓ = moment arm of reaction jet, ft

Wf = pounds of fuel used to effect $\Delta\dot{\theta}$

From equation 9, it is apparent that to keep the fuel consumption low, the value of $\Delta\dot{\theta}$ must be limited. In making large changes in roll angle, this implies a limiting of the roll angular velocity.

The inner rate loop has been optimized (in the small perturbation analysis of the previous section) to provide minimum fuel consumption for step-type roll rate commands.

The configuration of the proposed entry control system resulting from the foregoing considerations is shown in Figure 61. Note that switches 1 and 2 are open during entry. The switches are closed for pre-entry attitude control.

Preproposal and early Apollo entry simulations indicated that rates in the neighborhood of 15 degrees per second provided acceptable control. Arbitrarily established values for rate limits p_{c1} and p_{c2} are

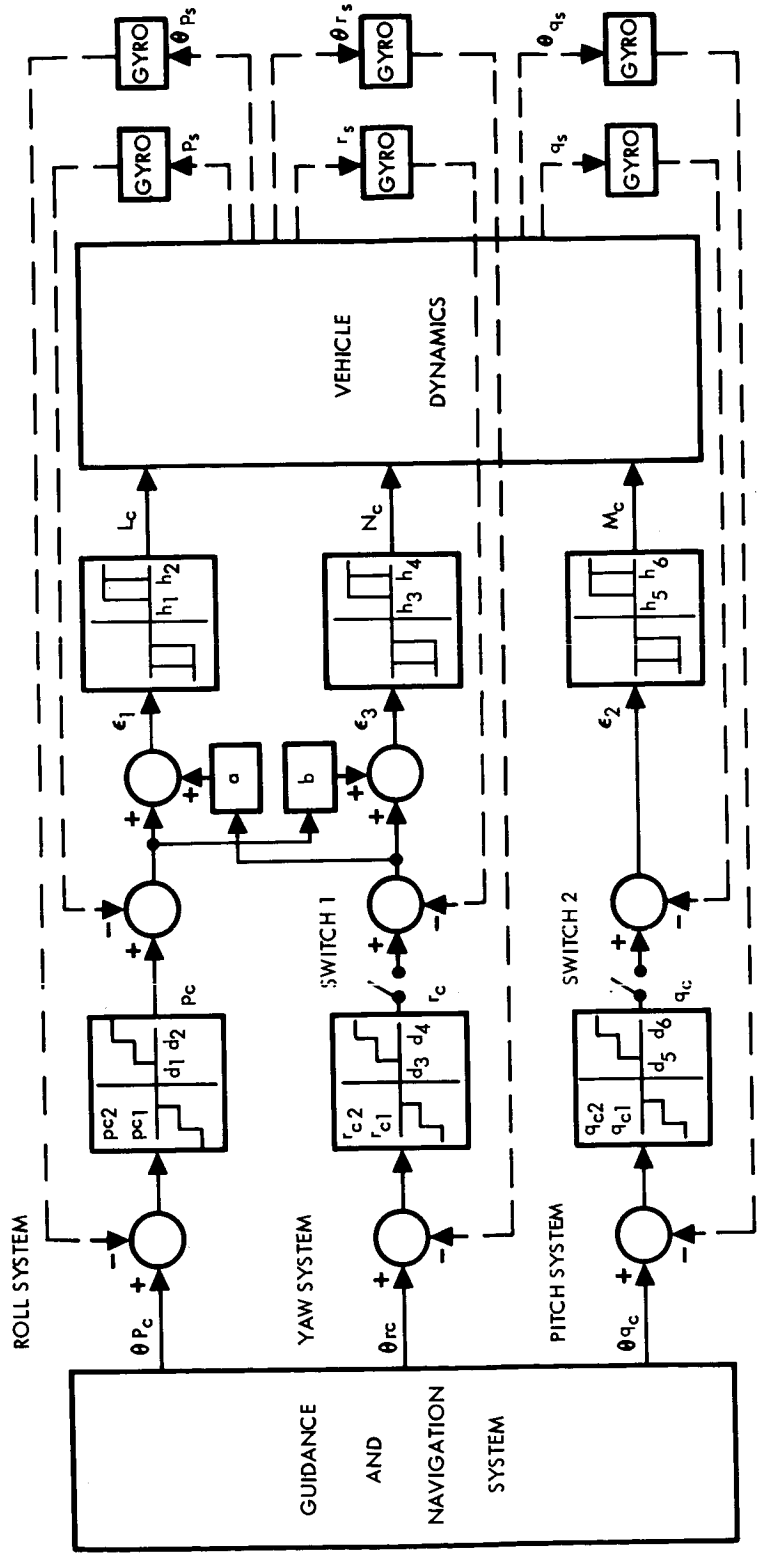

$\theta P_{c_1}, \theta r_{c_1}, \theta q_{c_1}$ = ATTITUDE COMMANDS ABOUT "TRIM" BODY AXES $\{\alpha_T = 32°, B_T = 0\}$

$P_{c_1}, r_{c_1}, q_{c_1}$ = RATE COMMANDS ABOUT "TRIM" BODY AXES $\{\alpha_T = 32°, B_T = 0\}$

$\theta P_{c_1}, \theta r_{c_1}, \theta q_{c_1}$ = INSTANTANEOUS ATTITUDES ABOUT "TRIM" BODY AXES $\{\alpha_T = 32°, B_T = 0\}$

$P_{c_1}, r_{c_1}, q_{c_1}$ = INSTANTANEOUS RATES ABOUT "TRIM" BODY AXES $\{\alpha_T = 32°, B_T = 0\}$

$a, b, d_1, d_2, d_3, d_4, d_5, d_6, h_1, h_2, h_3, h_4, h_5, h_6, P_{c_1}, P_{c_2}, r_{c_1}, r_{c_2}, q_{c_1}, q_{c_2}$ = SYSTEM CONSTANTS

Figure 61. Proposed Entry Vehicle Control System—Block Diagram

$$p_{c_1} = 5 \text{ deg/sec}$$

$$p_{c_2} = 15 \text{ deg/sec} \qquad (10)$$

The attitude deadband "d", was arbitrarily set at:

$$d_1 = 3 \text{ deg} \qquad (11)$$

It will be shown that an optimum value of d_2 exists. The analysis of this system can be simplified by assuming that the yaw stabilization loop performs its function of forcing $r_s = 0$. Simulation results correlate well with this assumption. See Figure 61.

To attain the small deadband velocities required in making precise astronomical measurements and to minimize fuel consumption, stabilization control should achieve single minimum-impulse operation.

The two pulse modulation schemes that have been studied for use in the Apollo SCS are a preprogrammed pulse system and a pulse width-and-frequency modulation system.

PREPROGRAMMED PULSE SYSTEM (SYSTEM A)

This system will converge to single minimum-impulse operation provided that each pulse is shorter than the sum of all scheduled previous pulses.

If rate information is introduced, on and off switching lines may be defined in the phase plane. Figure 62 shows these on and off lines for a rate gain of 2.

If the rate at which the vehicle leaves the pulsing region ($\dot{\theta}$ out) plotted as a function of the rate at which it entered the pulsing region, a curve such as that of Figure 63 is obtained. (This particular curve is obtained if we assume a torque-to-inertia ratio of 0.2 degrees per second per second and any value of rate gain.

Also plotted on Figure 63 is the line $\dot{\theta}$ in = $\dot{\theta}$ out. Where this line intersects the rate curve, a point of operation is obtained where the velocity at which the vehicle leaves the pulsing region is equal in magnitude to the velocity at which it entered. This intersection indicates the possibility of a stable limit cycle.

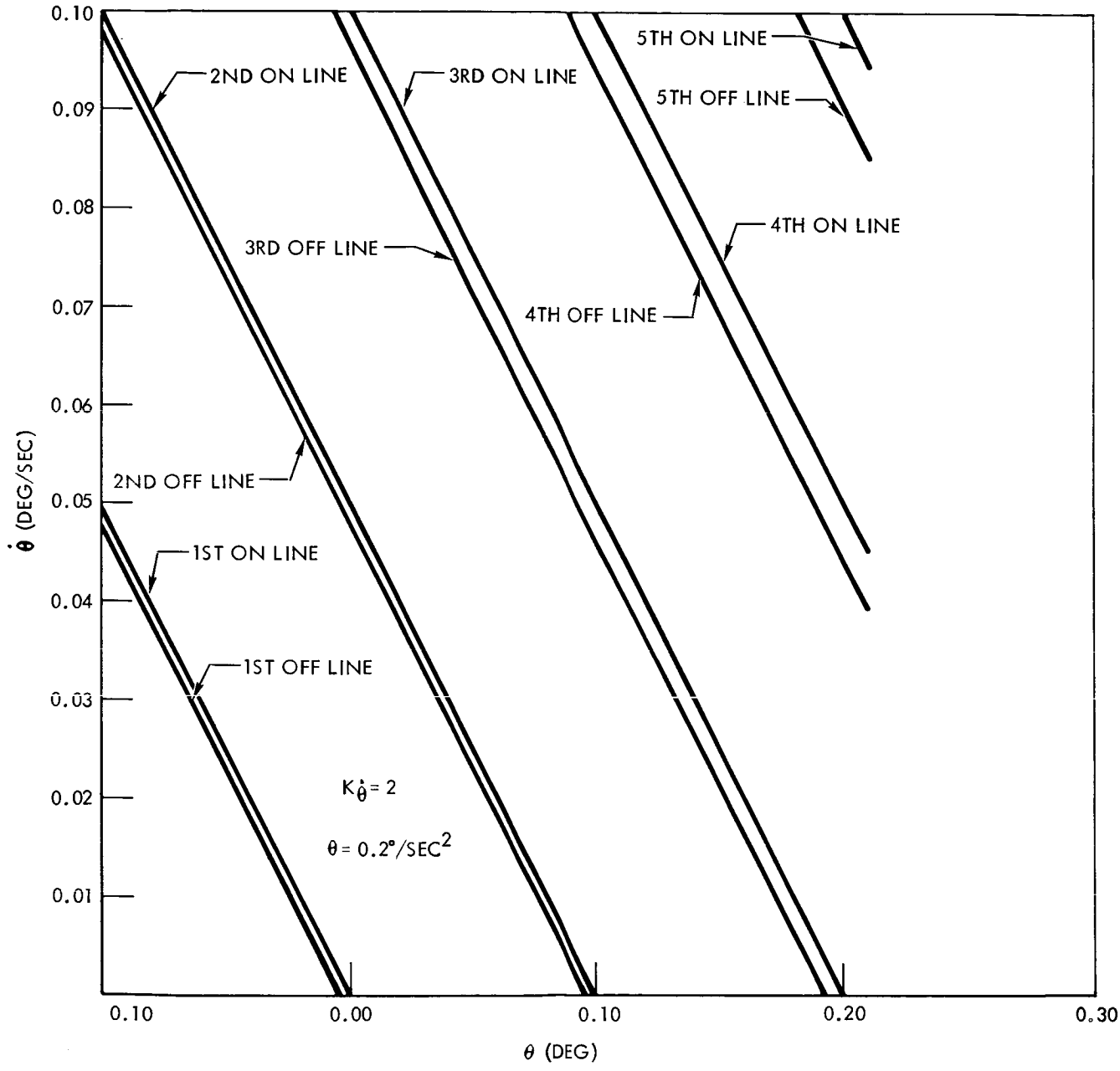

Figure 62. Switching Lines—System A

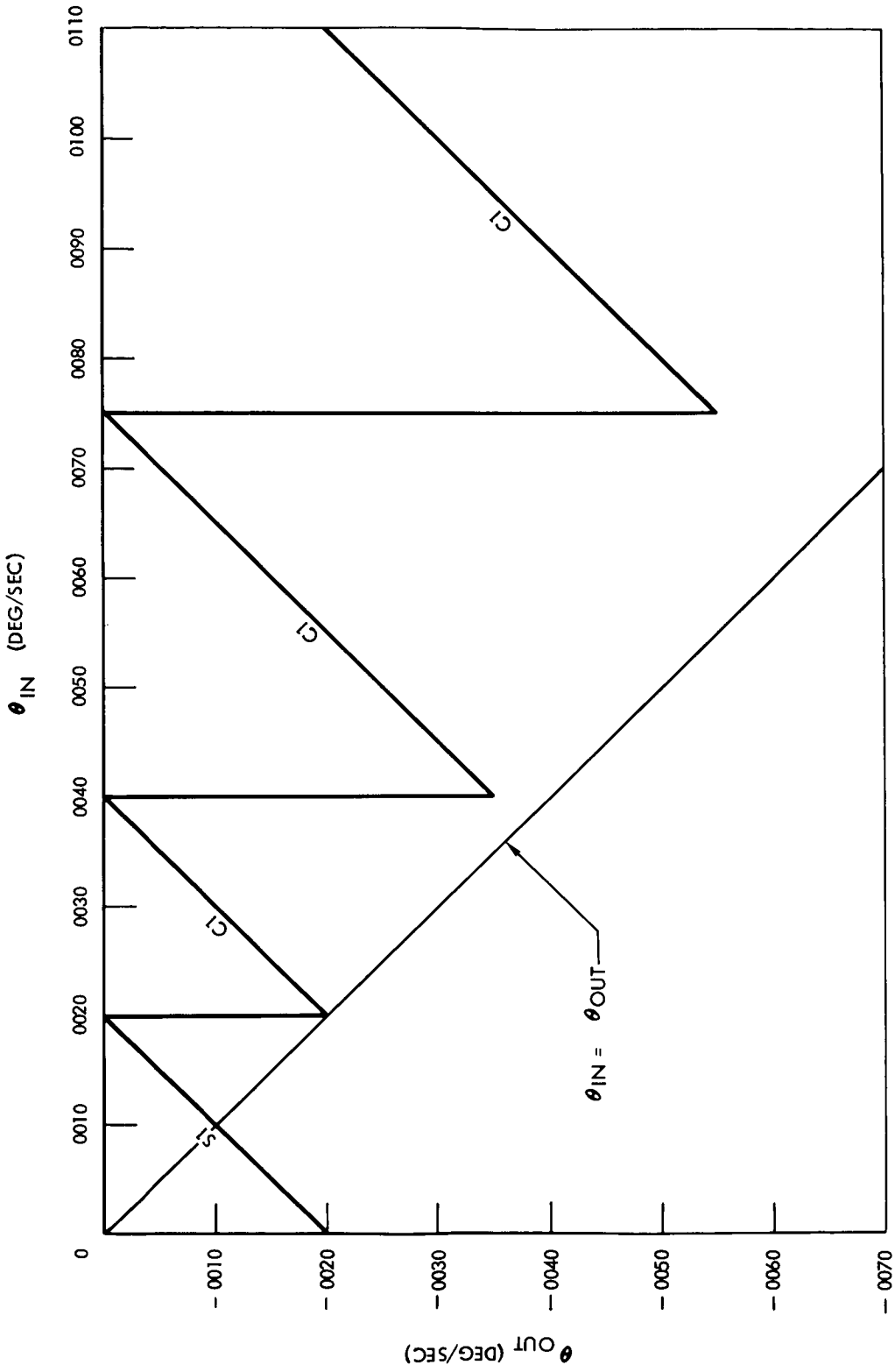

Figure 63. Rate Diagram—System A

CONFIDENTIAL

The region identified by S1 in Figure 62 is a region of stable single pulse operation. The point of intersection represents a symmetrical single pulse limit cycle. For all other entrance rates below 0.002 degrees per second, unsymmetrical single-pulse limit cycles occur. At 0.002 degree per second, the possibility exists of a two-pulse limit cycle. This, however, is a point of unstable equilibrium and may be safely ignored. The rest of the rate curve lies above the $\dot{\theta}$ in = $\dot{\theta}$ out line and each section is designated C1 indicating convergence to single-pulse operation.

This curve of Figure 63 represents satisfactory performance at low rates. Because the shape of the rate curve is not a function or rate gain, the choice of this parameter may be based on large signal performance.

Convergence of this system to single pulse operation is greatly affected by rate information. The first three switching lines for a rate gain of 5 are shown in Figure 64 and a plot of entrance rate is shown in Figure 65. The stable 2-pulse operation is possible although this can be eliminated by increasing the rate gain.

LIMIT CYCLE BEHAVIOR

Table 21 shows the minimum limit cycle velocity and the minimum attitude deadband attainable with these two systems for two representative vehicle configurations and two levels of thrust. The vehicle configurations chosen are composed as follows:

1. Command module + service module + mission propulsion + lunar landing module - configuration: Inertia 388×10^3 slug-ft^2

2. Command module + service module (empty) - configuration: Inertia 10^4 slug-ft^2

Two different levels of reaction jet thrust are chosen: a 100-pound thrust and a 5-pound thrust. These are mounted in couples with a moment arm of 6.5 feet to give torques of 1300 foot-pounds and 65 foot-pounds, respectively.

The preprogrammed system is termed system A, and the pulse-width-and-frequency modulation system is termed System B.

The minimum attitude deadband is given as the sensor signal threshold θ_T, plus the additional attitude imposed by control system operation. It is assumed that there is no time lag in the guidance system: as soon as the sensor reaches its threshold, the control system is given a sensor signal.

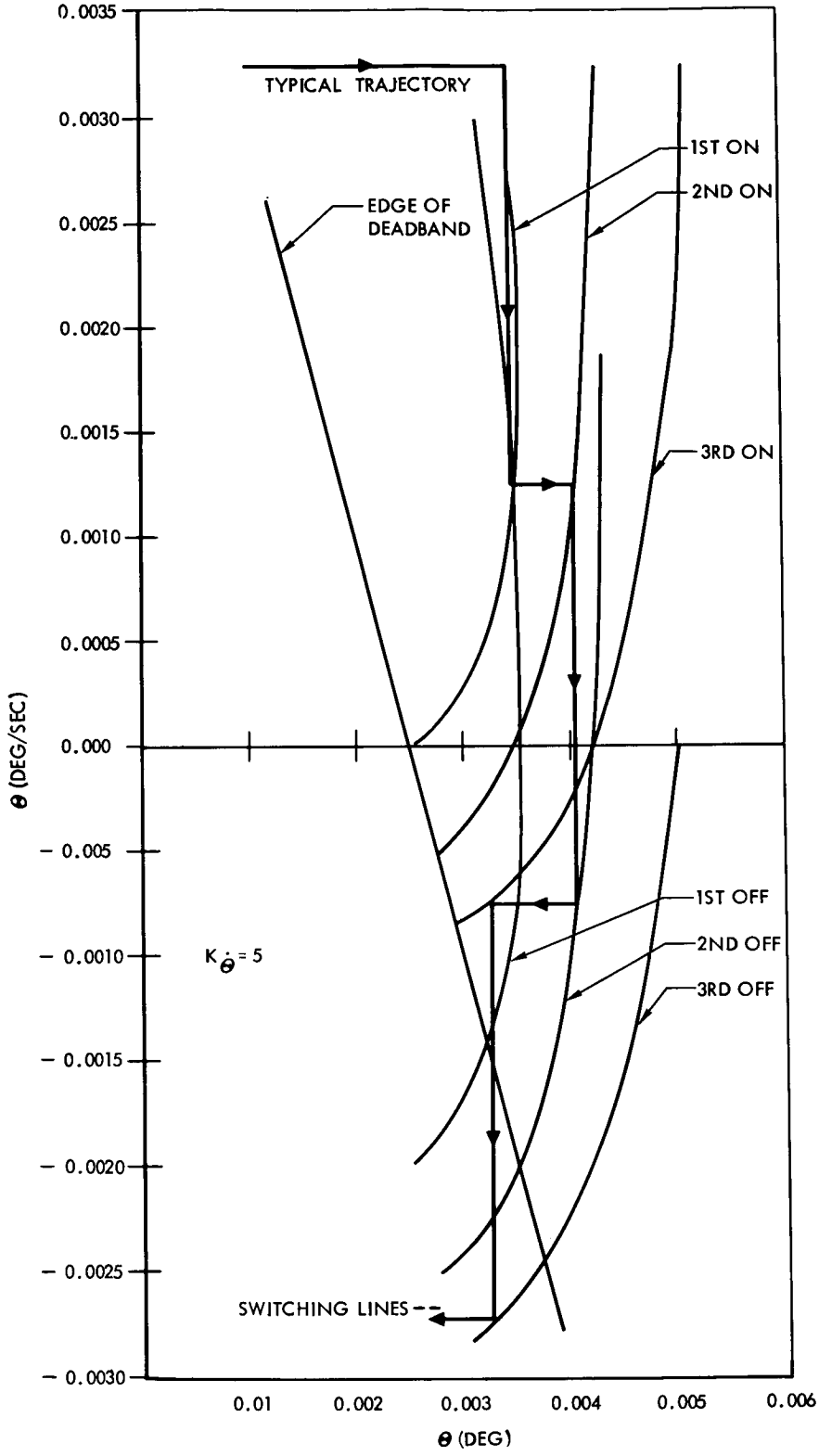

Figure 64. Switching Lines—System B

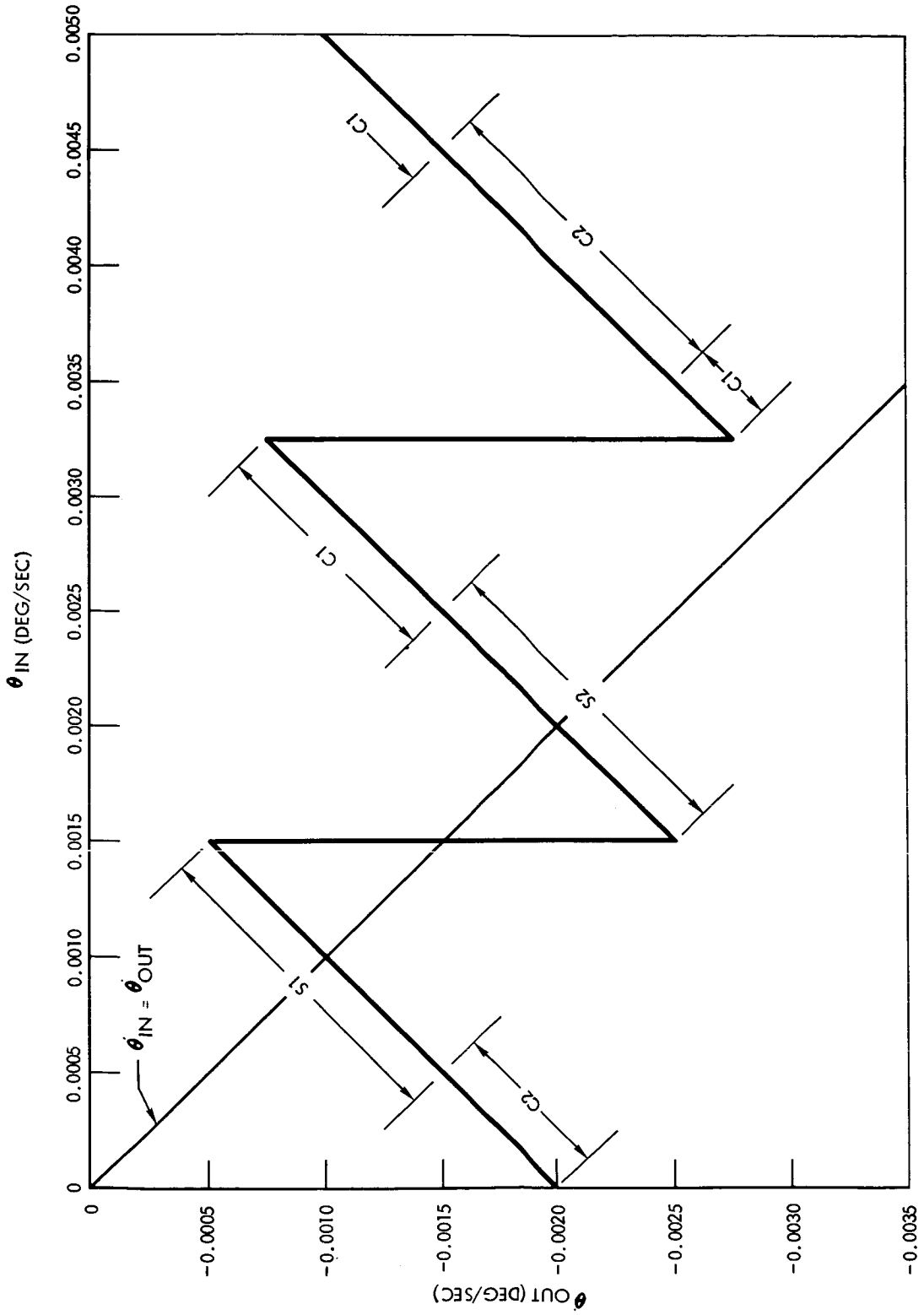

Figure 65. Rate Diagram—System B

TEST

During this period, the equipment and facilities requirements for support of S&ID development testing on the SCS have been defined. Equipment and instrumentation procurement specifications and requests have been prepared and submitted.

Components and parts are scheduled to arrive for evaluation tests during July. Interim facilities will be used to support this phase of the program. The evaluation tests on components and parts will continue through the next period. The breadboard system test will culminate the SCS experimental evaluation program.

CREW PROVISIONS

FLIGHT CONTROLS AND DISPLAYS

Preparation is in progress of a report on human engineering in control systems.

Control display parameters for mock-up 2 and 3 were prepared and submitted to the structures group.

Coordination is in progress of the selection and testing of an alpha-numerical read-out device for the life systems in-flight test system (IFTS). The device is to be utilized on the IFTS panel currently under development.

The flight test panel drawing has been completed; a silk screen reproduction of the panel has been installed in mock-up 3.

A presentation of control-display subsystem development was prepared and given on 6 June to NASA representatives at S&ID.

Interior lighting requirements for the command module interior and panel lighting have been drafted by life systems.

A drawing revision of the primary console for mock-up 2 and 3 has been completed.

A revision of the primary display panel layout has been completed.

CABIN INTERIOR AND CREW STATION ARRANGEMENT

A coordinated study is in progress to establish peak performance demands for the environmental control system (ECS).

Drawing layouts were completed showing eye levels for the 10th percentile and the 90th percentile crew members, to establish an eye height position for the sextant/telescope eye piece. The drawings have been forwarded with comments and recommendations to the electrical interfaces group for transmittal to MIT.

Materials and documents dealing with vision in the Apollo (including information on a study of eye positions for the sextant/telescope) were prepared for a June presentation by a life systems representative at MIT.

The air lock entry study layout drawing and the interface controller armrest drawing have been completed.

The drawing for a quartz lamp housing has been completed; the lamp assembly will be tested for use as a source of interior and exterior command-module lighting.

A lunar landing egress and descent/ascent study is in progress.

Completion of a study concerning the relocation of pressure suit oxygen connections and the rerouting of "shirtsleeve" environmental plumbing has resulted in the removal of plumbing from the electronic equipment bay.

An analysis of cabin atmospheric control ventilation rates has been completed.

A study has been initiated to determine the type of location for a control to vent the command module through the outflow snorkel.

CABIN INTERIOR ARRANGEMENT MOCK-UP

The privacy curtain installation drawing and the detail drawing for the relief station have been completed and submitted for use in fabricating these items and for installing them in mock-up 2 and 3.

Coordination methods have been established for allocating space in the command module. Several major equipment relocations were necessary to allocate space for the in-flight test panel. A revised configuration will be reflected in mock-up 3.

Window configurations were modified and a drawing reflecting these modifications has been completed. The display panel arrangement drawing has been completed for mock-up 3.

The anthropometric grid for pressure suit and cabin arrangement measurements has been completed and installed in the workspace analyzer room.

Design criteria for the air lock step configuration have been completed. An air lock mock-up is being developed for use in checking pressure suit clearances and for detailing egress-ingress requirements. Pressure valves and workspace requirements, also, will be studied in the air lock mock-up.

Drawings of shock-mounted and hard-mounted lighting fixtures for boilerplate drop tests have been completed.

A sleep curtain drawing has been submitted for use in the fabrication of the curtain and its installation in mock-up 2 and 3.

An analysis of lighting conditions for the command module (including ambient and artificial lighting) has been completed, fixture locations have been determined, and lighting fixture designs and layouts have been completed for mock-up 2 and 3 and for boilerplate 2. Lighting hardware has been ordered for mock-up 2 and 3. A harness assembly drawing has been completed and released.

LIGHTING

The general procurement specification for interior illumination, Apollo spacecraft, has been completed.

LIFE SYSTEMS MOCK-UP ACTIVITY

Requests for change and for study were prepared for the Category I inspection (18 June) of mock-up 3, 4, 5, and 7.

Evaluator 1 was used for window demonstrations and briefings given on 19 June for NASA, MIT, Minneapolis-Honeywell, and life systems management personnel. Presentations were made of the following:

Windows - proposed number and location
Lights - incandescent versus fluorescent
Crew arrangement
Controls and displays

CREW COUCH DESIGN

The crew couch pad drawings have been completed. The pad has been fabricated and installed on the three couches in simulator 1. The headrest adjusting mechanism drawing for the performance analyzer has been revised.

PERSONAL EQUIPMENT

A control layout drawing for personal leads disconnects has been completed: pressure suit disconnects have been defined for installation in mock-up 3.

The evaluation of crew stabilizing techniques in relation to crew personal equipment is being continued. A study of the chemical and physical

properties of Velcro has been initiated to determine its possible applications in personal equipment.

A study of the relationship of the ECS and of the spacesuit in the matter of human thermal balance while the suit is being worn has been initiated to ascertain whether or not present specifications provide adequate cooling.

The study of radiation shielding during lunar exploration has been continued.

FOOD MANAGEMENT AND WATER SUPPLY

Agreement has been reached with regard to the volume and location of the food storage facilities. Basic criteria have been established for selection of artificial survival food and for emergency eating procedures. An evaluation of synthetic nutrients in powdered or in aqueous form has been made for their possible use as food and water supply for the flight crew.

Diet procedures have been established for use in simulator tests. A diet and menu selection outline has been prepared.

WASTE MANAGEMENT

The installation study drawing for the fecal canister movable support has been completed. Recommended procedures for urine treatment have been completed. A preliminary analysis of bacterial survival in a hard vacuum is being conducted along with an analysis of microbiological control problems. A vacuumized commode prototype has been completed and is undergoing tests.

CREW ANALYSIS

An initial in-flight maintenance format for a data processing print-out of the integrated task index has been completed.

A definition of problems associated with the biomedical aspects of count-down, checkout, etc., has been prepared for use with GSE design analysis. A preliminary format for a human-factors GSE checklist has been completed. A test procedure for evaluation of the evaluator 1 air lock, hatch, windows, couches, and duty stations has been completed.

Studies are being conducted of crewman tasks during the prelaunch phase. A preliminary report has been completed establishing recommended noise levels within the command module.

SIMULATION AND TEST

An evaluation of a Radioplane recovery parachute air drop test schedule has been completed to determine those tests for which life systems will require on-board equipment.

Preliminary life systems test requirements for house spacecraft tests (boilerplate 14) have been completed.

An outline of the life systems centrifuge test program requirements has been completed.

A preliminary outline of life system prequalification flight drop-test requirements (boilerplate 3, 5, and 19) has been completed.

A statement of biomedical policies and requirements for human simulation and an applicable test have been prepared for presentation to the hazards review committee.

Preliminary life systems land and water impact test requirements have been completed for the crew support system test program.

A preliminary life-systems test and simulation test schedule has been completed.

Acceleration profiles have been completed for the Apollo mission, launch, earth entry and recovery phases, and all abort conditions.

GROUND SUPPORT

A meeting was held on 12 June for MIT, Raytheon, AC Sparkplug, and ground support equipment personnel to discuss methods for integrating applicable hardware and procedures for operation of the navigation and guidance system telemetry. MIT indicated the human engineering problems which they felt needed immediate attention.

PROBLEM AREAS

A major technical problem is the definition of the scope of manual operation employed in such major phases of the mission as parking orbit, rendezvous, lunar approach, lunar landing, and lunar departure. The operation of these phases may require control display designs that are more sophisticated than the present state of the art. A special control display task group has been organized to deal with these problems.

[redacted]

LABORATORY SUPPORT

Laboratory support was given to Apollo life sciences affecting some crew provision requirements. Initial investigation was made of materials and processes used in biosensors, of simulated viscera and moulages, and of biologically inert materials to obtain knowledge of their properties. Preliminary studies were made of the use of coated polyester and polypropylene film for heat-sealed bags of various sizes for storage of fecal matter and containers.

Because of procurement problems in securing dielectric and ultrasonic sealing equipment for the engineering development laboratories, it is recommended that this work, as well as that of securing biological properties data, be subcontracted. No further effort concerning these items will be undertaken by the engineering development laboratories unless specific requests are made.

LAUNCH ESCAPE SYSTEM (LES)

CONFIGURATION

The structural configuration of the LES consists of four major components: the tower truss structure, the launch escape motor, the tower jettison motor, and the nose cone.

The total LES length of approximately 388 inches, the tower jettison motor installed forward of the launch escape motor, presents the most feasible design. This design is considered the optimum compromise because it increases aerodynamic stability, reduces the weight of the ballast required, and precludes severe launch escape motor exhaust impingement upon the top of the command module.

Lead ballast in the symmetrical nose cone, forward of the tower jettison motor, provides the necessary center-of-gravity location throughout abort.

An aerodynamic skirt covers the launch escape motor nozzles, the nozzle actuators, and the hydraulic fluid reservoir.

TOWER STRUCTURE

The LES tower is a four-legged, tubular, welded truss structure fabricated from 6 Al-4V titanium alloy, which affords good elevated temperature resistance (up to 1000 F). However, those members directly impinged upon by the launch escape motor exhaust will require adequate insulation.

Attachment and release of the tower are accomplished by a mechanism incorporating in each tower leg a double-hook latch held closed by means of a toggle linkage and a cable under tension. The four cables converge at a centrally located, explosively actuated, guillotine type of cutter. Adjustment provisions are incorporated at the command module attaching points to compensate for misalignment resulting from fabrication and assembly.

AFT SKIRT

The aerodynamic skirt (34-degree flare) covering the launch escape motor nozzles distributes the load from the four tower attaching points into

the motor case through an attachment ring provided on the motor aft closure. Alignment of the motor center of thrust is accomplished by an adjustment device at each of the four tower attaching points.

JETTISON MOTOR

A subcontractor will provide the tower jettison motor, situated above the launch escape motor and the cylindrical adapter section between the motors.

NOSE CONE

The nose cone configuration provides for installation of an F-16 transducer "Q-Ball" and can accommodate approximately 1500 pounds ballast if it is required. For those systems not requiring "Q-Balls", a dummy nose cone will be used. The "Q-Ball" and the dummy nose cone are interchangeable. The nose cone, with a 15-degree nominal cone angle and a 2-inch nose radius, is attached to a ring flange of the tower jettison motor case.

ROCKET MOTORS

Launch Escape

The design of the launch escape motor matured rapidly during the quarter. The subcontractor completed all design work for tooling and special test equipment.

Early in the quarter, aerodynamic and thermodynamic study at S&ID showed that jet plume impingement upon the command module from the 19-degree nozzle cant angle originally chosen would result in reduction of stability, undesirable drag, and marginal heating rates. The angle was changed to 33 degrees. The cosine thrust loss was found to be nearly equal to the reduction in drag obtained by eliminating impingement, so that redesign of the propellant configuration was not necessary. This change, however, required redesign of the aft head of the motor: a hemispherical, machined forging, instead of the original 2:1 elliptical head, resulted.

Design of the thrust vector control system, also, was completed during the quarter; fabrication of nozzle parts has begun.

Acting on instructions from NASA, S&ID directed Lockheed in June to withold award of the contract for electrohydraulic actuators until further notice. Activity remained suspended at the end of the quarter, and a corresponding slippage of schedules affecting thrust vector control development could not be avoided.

The design of other components of the thrust vector control system (hydraulic tank, ballonet, valves, lines, fittings, and associated hardware) were released at the end of the quarter. Procurement action for these items and for associated test equipment and tooling was started.

During the period, the interface between the launch escape motor and the structural skirt which carries loads into the tower was defined, and an interface control drawing was released.

Revised theoretical performance curves, supplied by Lockheed for the launch escape motor, are shown in Figure 66.

Igniter component tests were begun late in the quarter; the initial test produced predicted data.

Tower Jettison Motor

The unusual scarfed nozzle design (Figure 67) was recognized at the outset as a possible motor performance problem area. A series of six static firings of scarfed as well as of conventional nozzles was conducted by use of test motors to determine the factors affecting internal ballistic design. The full-scale two-nozzle motor is estimated to effect 2.66 percent less axial thrust than motors with conventional nozzles, a factor has been considered for ballistic design.

Motor design were released, contracts were awarded, and orders for all major components were placed during the quarter.

Detailed planning for development, qualification, and manufacturing of the tower jettison motor was in progress at the end of the quarter.

During the nozzle test firings, there was evidence of resonant burning when the propellant formulation TPE-8035 was used. This propellant contains no aluminum. To reduce the probability of resonant burning in the full-scale motors, TPE-8104 propellant will be used, a formulation containing 2 percent aluminum but otherwise nearly identical with TPE-8035.

Figure 68 shows the post-test appearance of one of the scarfed nozzle firings; Figure 69 gives the theoretical performance of the jettison motor; Table 22 is a preliminary summary of the characteristics of both the tower jettison motor and the launch escape motor.

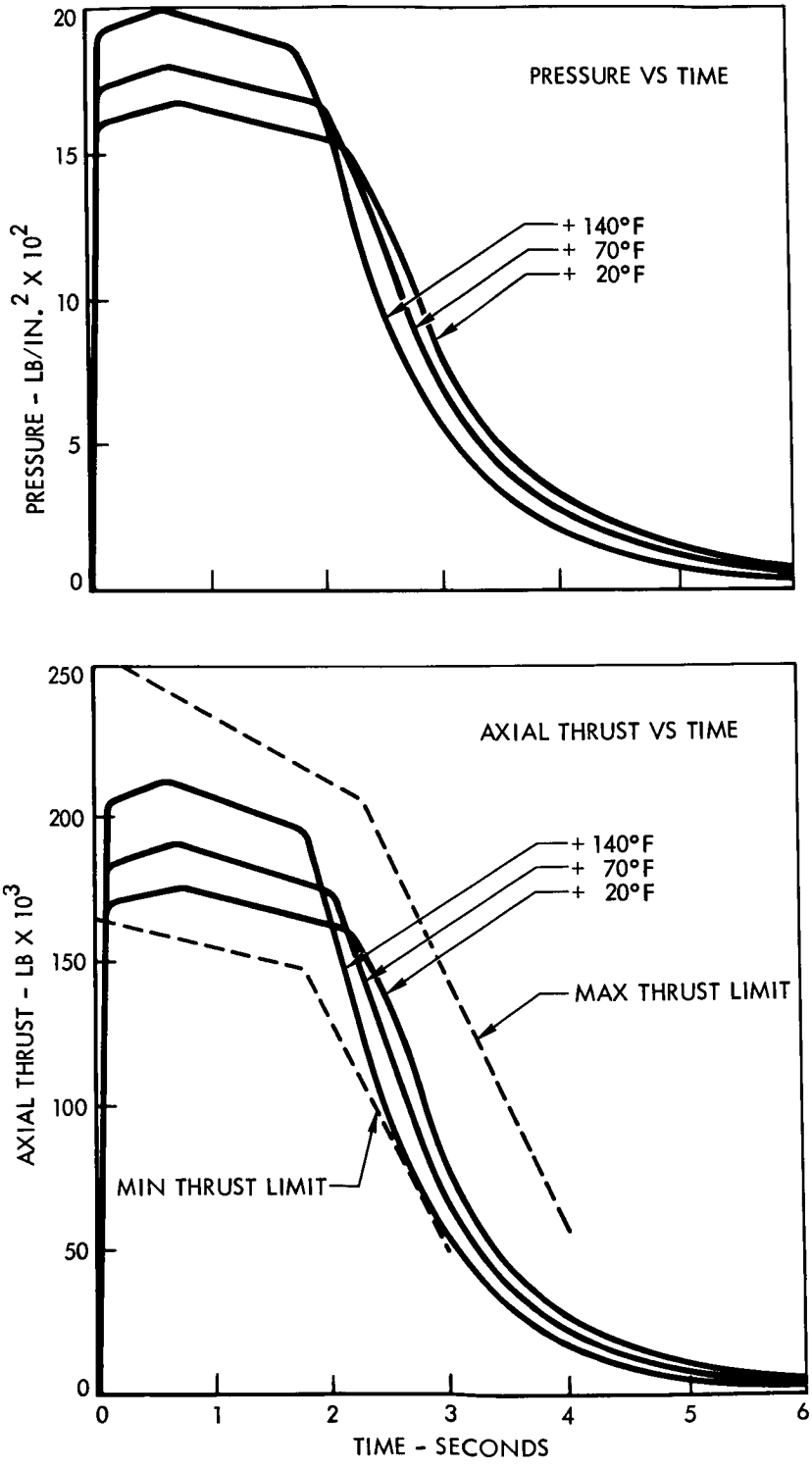

Figure 66. Apollo Launch Escape Motor—Predicted Sea Level Performance

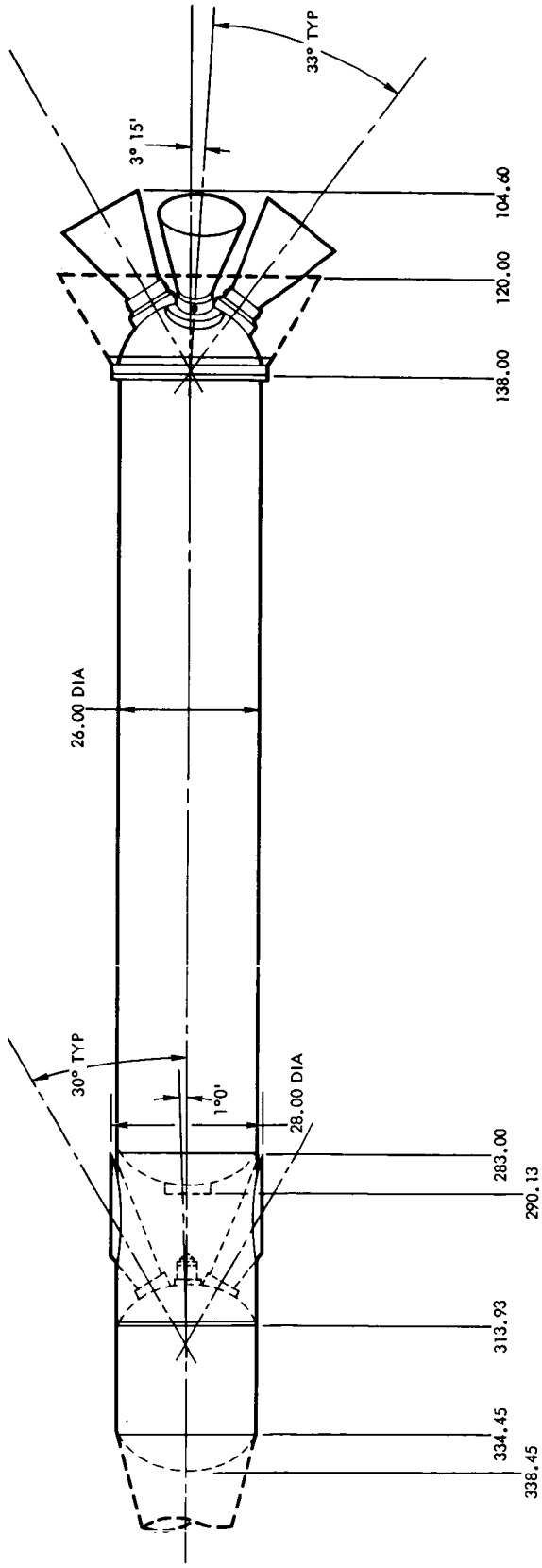

Figure 67. Tower Jettison and Launch Escape Motor—Scarfed Nozzle Design

CONFIDENTIAL

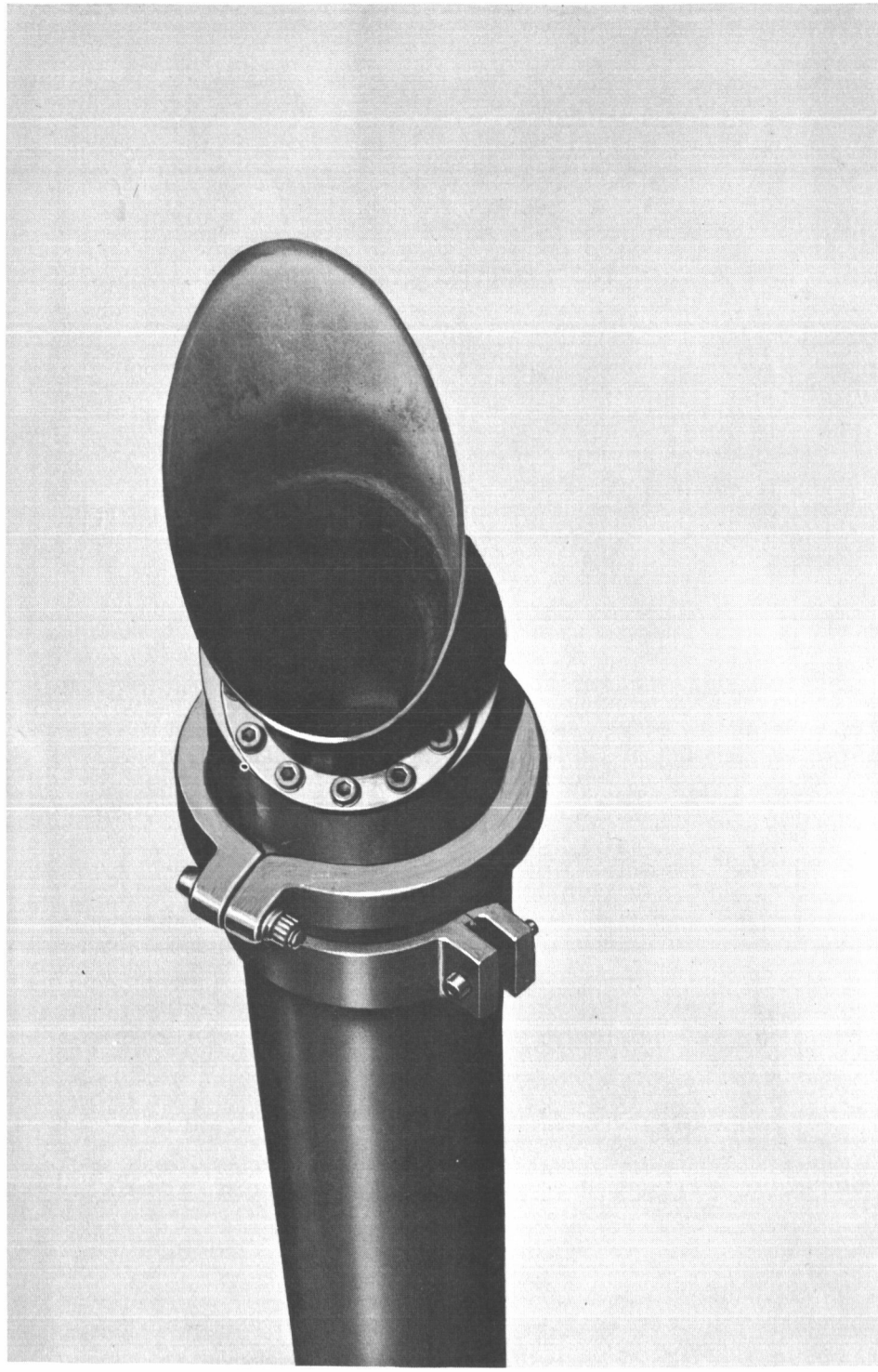

Figure 68. Scarfed Nozzle Firing—Post-Test Appearance

CONFIDENTIAL

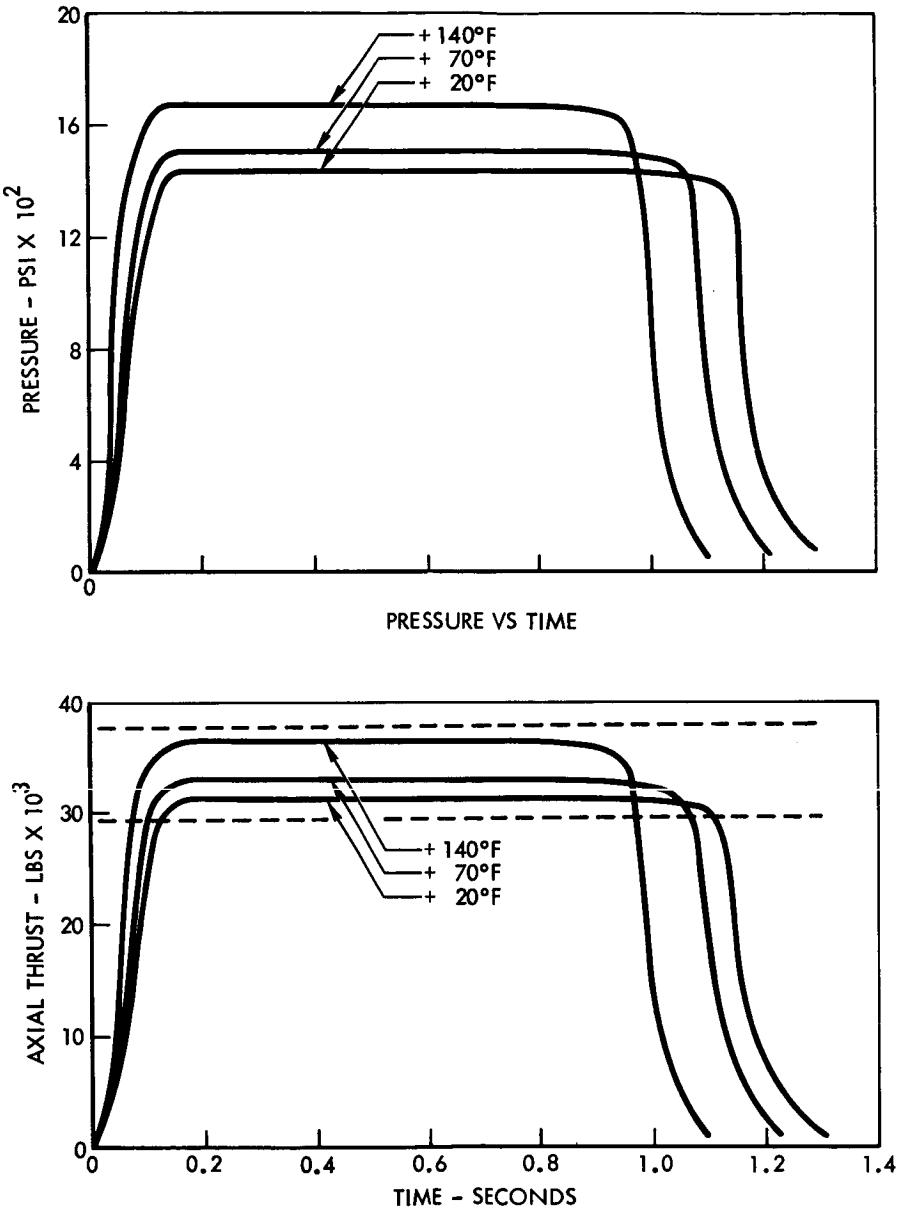

Figure 69. Apollo Tower Jettison Motor—Predicted Sea Level Performance

[redacted]

Table 22. Preliminary Characteristics of the Tower Jettison Motor and Launch Escape Motor

Characteristics	Tower Jettison Motor	Launch Escape Motor	Remarks
Length	55 in.	176 in.	
Diameter	26 in.	26 in.	
Grain design	10 point star	8 point star	
Propellant	polysulfide ammonium perchlorate	polysulfide ammonium perchlorate	
Wt of loaded motor	434 lb	4836 lb	
Wt of prop	208 lb	3200 lb	
Motor Burned Wt	222 lb	1636 lb	
Nozzle no. and cant angle	2 at 30°	4 at 33°	
Nozzle throat area, each	8.65	19.1	
Nozzle area ratio & half angle	5:1 to 11:1, 10°	10.1	
Port ratio	26.5:1	2.1	
Operating temperature	20 F to 140 F	20 F to 140 F	
Storage temperature	20 F to 160 F	20 F to 160 F	
Resultant thrust angle	1°	3° 15'	
Total time	1.25 sec	6.5 sec	
Burn time	1.0 sec	2.0 sec	
Action time	1.1	4.0 sec	
Avg thrust during burn time	33,000	183,200 lb	
Avg thrust during action time		119,800 lb	
Avg pc during burn time	1500 psi	1750 psi	At sea level and 70 F along resultant thrust vector, as applicable
Avg pc during action time		1175 psi	
Total impulse during burn time	33,000	335,000 lb/sec	
Total impulse during action time		539,000 lb/sec	
Total impulse during total	35,600	550,200 lb/sec	
Avg I_{sp} during burn time		220.8	
Shutdown impulse	3500	183,700	70 F and sea level
Time to 90% Thrust	75 to 125 ms	25 to 125 ms	
C*	4690	4575 F	
Combustion temperature	4680	4600 F	
Propellant density	0.062	0.0618 lb/in.^{3}	
% vol Loading	24.2%	70%	
Cp/Cv	1.23	1.23	
Burning rate r =	$0.82\left[\frac{Pc}{1000}\right]^{0.35}$	$[0.69_e]^{(T-70)}\ 0.0081\left[\frac{Pc}{1000}\right]^{0.46}$	
Temperature sensitivity, K (% F)	0.125	0.15	
Thrust vector control	None	Hinged nozzle ±10°	
Igniter redundant	EBW pyrogen	EBW pyrogen	

[redacted]

Structural Analysis

Most effort in the last quarter was directed to the analysis of the launch escape tower, skirt, and release mechanism structures—components subsequently released for fabrication.

A test program to subject typical tubular truss members coated with various heat protection materials to rocket exhaust environment was instituted. It is planned to conduct these tests during the qualification tests of the Sparrow rocket motor at Rocketdyne-McGregor.

A study is being made to indicate the structural changes required if a passive control system for the LES is adopted. For the present configuration with 750 pounds of ballast and a lateral "kicker" rocket thrust of 6000 pounds, no structural changes would be required if the passive system were adopted.

Weight Control

Inertia, weight, and center of gravity were computed for various main motor burning times. The configuration utilizing thrust vector control weighs 5900 pounds without the requirement of ballast.

Studies are being continued to develop a passive system of fixed nozzles with ballast weight variation up to 1500 pounds.

LABORATORY SUPPORT—PRODUCIBILITY AND STRUCTURAL TUBING MATERIAL

One tube made from annealed titanium, 6Al-4Va sheet material, has been received.

Future work involves completion of mechanical properties tests for design allowables and weld tests.

A plan of action has been completed for a preliminary tubing tensile-and-compression evaluation program for the escape tower. The property determinations will be conducted at room temperature.

A plan of action has been completed for investigations of escape tower joint configuration welds. All evaluations will be made at room temperature.

The escape rocket test program has been issued; the initial "on-site" setup is anticipated to begin 8 August 1962 at Lockheed's Beaumont test facility.

[redacted]

ENVIRONMENTAL CONTROL SYSTEM

An ECS package containing the major components, capable of being easily replaced, has been designed (Figures 70 and 71). It is designed for complete system checkout prior to installation and checkout within the module. The remaining equipment, three small packages containing oxygen, glycol and water, and nitrogen control valves are clusters of 5, 4, and 3 respectively and are accessible and easily replaced.

The ECS package is 31 inches high, 36 inches wide and 17 1/2 inches deep. Weight is approximately 160 pounds. Figure 70 is a view outboard from the crewman's left. The top of the package is approximately level with his hip when he is in the supine position. The 12 pack disconnects are clustered at the lower right-hand side of Figure 70 and at the upper left center. They are accessible through removable panels. When eight bolts are removed, the package rolls out on a track mounting to a point where it is rotated 90 degrees, picked up by a boom rig, and removed through the door. Figure 71 is a view of the package from outboard.

ECS performance and requirement summaries affecting other systems have been prepared, submitted, and entered into the Design Data Manual.

TESTING

Activities for ECS testing were concentrated on the breadboard testing program. These tests consist of a study and evaluation of the performance of the system during simulated phases of the Apollo missions. Preliminary test plans for the ECS breadboard test have been prepared. Detailed test plans for breadboard testing are currently being prepared as well as the design of the test instrumentation and facilities. The rough draft of this plan has been completed through the prelaunch test phase. The eight test phases are I Prelaunch, II Launch, III Earth Orbit, IV Translunar, V Lunar Orbit, VI Lunar surface, VII Earth Return, and VIII Emergency.

The breadboard instrument diagram is complete.

The ECS design for boilerplate 6 and 12 has been halted until cooling requirements are defined.

CONFIDENTIAL

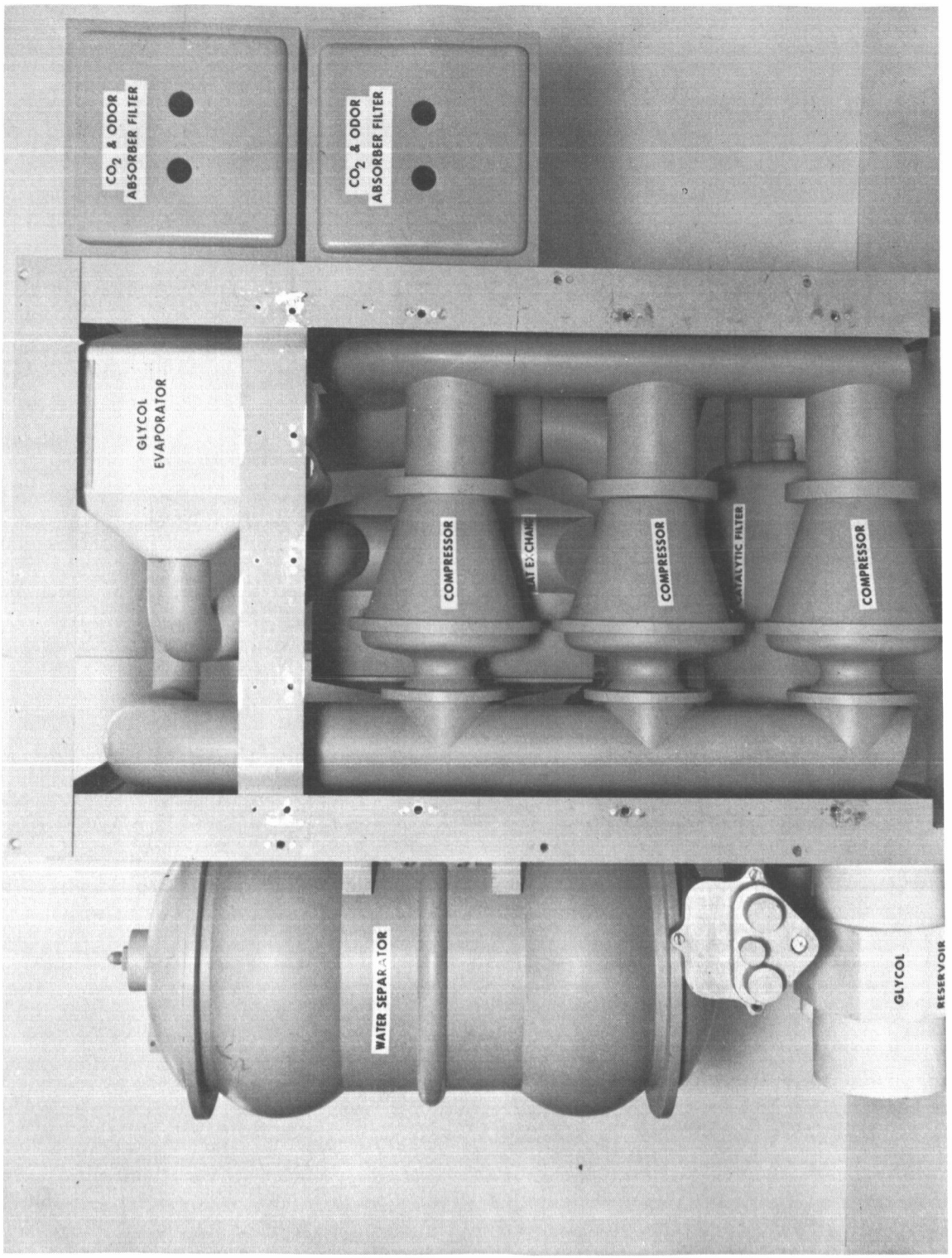

7005-04-73JJ

Figure 70. Environmental Control Package—Front View

CONFIDENTIAL

CONFIDENTIAL

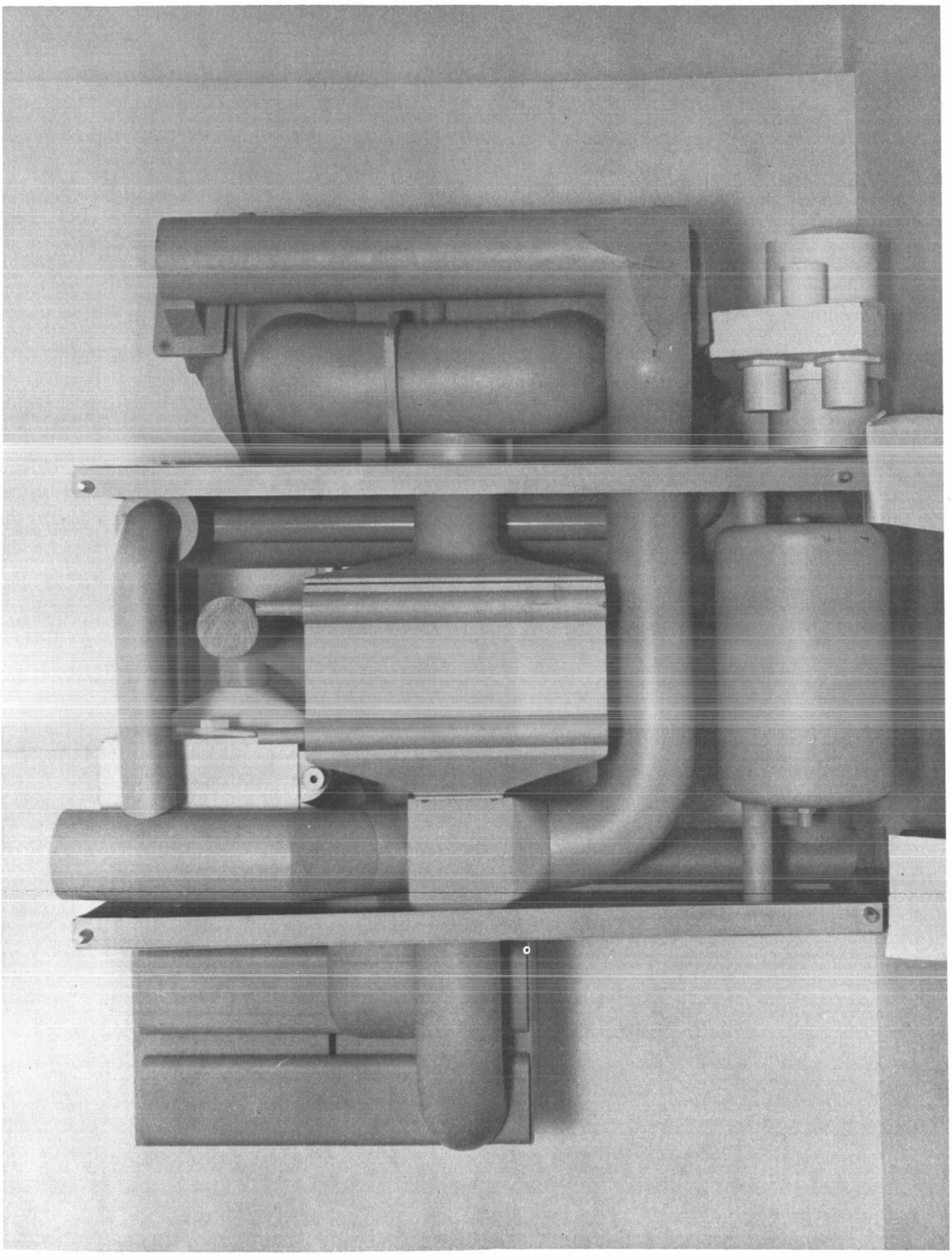

Figure 71. Environmental Control Package—Rear View

MOCK-UP

All ECS equipment for mock-up 3, 5, and 7 has been fabricated and installed.

Installation in mock-up 3 (service module interior) has been completed, and it is being prepared for shipment. The complete ECS package, spare carbon dioxide filter, recirculator blowers and evaporators, potable water valves, suit circuit ducting and outlets, air lock valves, and the ECS control panel are in the pressurized compartment.

Mock-up 5 (command module exterior) contains the aft and forward bay ECS equipment. Equipment in the aft bay consists of the potable water tank, chilling-water tank, urine tank, chemical tank, two reentry oxygen tanks, and the steam exhaust duct. Redesign of the urine disposal system has eliminated the two urine tanks and replaced them with a smaller urine container and a chemical tank consisting of a germicide for the control of bacteria. The outlet snorkel and the inlet snorkel are installed in the forward equipment bay.

Mock-up 7 (service module) ECS equipment includes the supercritical gas storage tanks used to store nitrogen, hydrogen, and oxygen. The glycol loop, extending to and from the radiators, is part of the ECS installation. The glycol lines also tie in the supercritical gas storage equipment to provide cooling. Also included are the water lines from the fuel cells to the command module.

PRESSURE AND TEMPERATURE CONTROL

Figure 72 is a simplified schematic of the pressure and temperature control system of the ECS. The illustration reflects improvements in the system weight and reliability.

The suit circuit is simplified by a common bypass line rather than individual lines for each suit.

Studies have been conducted to support designs and development of this portion of the ECS.

Studies of a more efficient catalytic filter are being conducted. A specific number of catalysts were tested for their ability to produce methane conversion. From the catalysts thus far tested, 0.5-percent palladium on alumina gives complete conversion over the lowest temperature range. A study of the relation of catalyst volume to methane conversion showed that the bed depth of the catalyst seems to have a more significant conversion

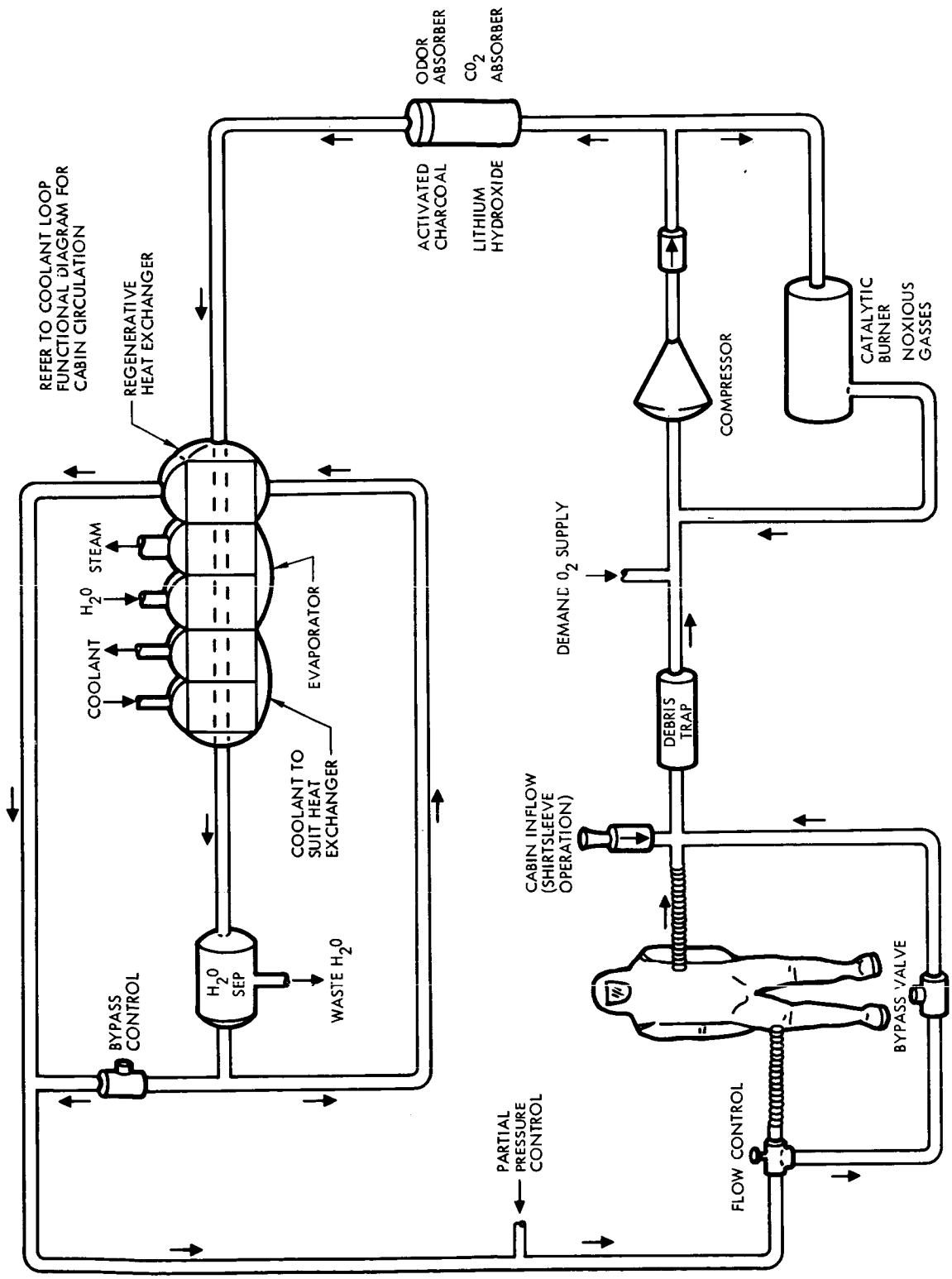

Figure 72. Suit-Cabin Circuit—Functional Diagram

effect than the effect of space velocity. New data have shown that a reduction in unit size of the catalytic filter is possible.

A study was conducted to check out instrumentation using a Mercury pressure suit and a Navy Mark IV pressure suit. The Mercury suit was preferred; the Navy Mark IV was considered unsatisfactory for this test because results indicated ballooning and excessive pressure drops.

The feasibility of the use of multipurpose backpack ECS as compared to the present concept of providing interior and exterior ECS was considered. Results of this study indicate that the multipurpose ECS provided the following advantages: potential reductions in weight and volume, increased flexibility, simplified ground checkout, and improved maintainability. Disadvantages of this concept are the complexity of in-flight instrumentation and the multiple quick-disconnect problem.

Backpack charging techniques include studies of charging by ambient temperature and cryogenic gases. Results of this study show that the ambient temperature gas method is simple but requires large tank volume per unit of stored mass. The more complex cryogenic method requires a smaller storage capacity.

Evaluation of emergency flow requirements in the oxygen system show that emergency conditions can be handled by allowing pressure to momentarily decay instead of adding heat to maintain a constant pressure.

WATER-GLYCOL LOOP

Figure 73 illustrates the functions of the coolant loop within the ECS. A temperature sensor and controller downstream of the coolant evaporator actuates a mix valve when the fluid temperature falls below a control minimum allowing flow from the module thermal load to enter upstream of the evaporator.

The nitrogen system for leakage testing of the space radiators was replaced with a liquid pressure method. The nitrogen system requires the ECS to be shut down or a complete parallel system to be installed. Isolation shut-off valves in each section allow leakage to be checked by observing water-glycol pressure decay rate.

The effect of water-glycol evaporator outlet temperature to total system weight was studied. The lower water-glycol evaporator outlet temperature yielded a lower total system weight. This effect was almost negligible in the water-glycol mixture but was pronounced in Freon 21.

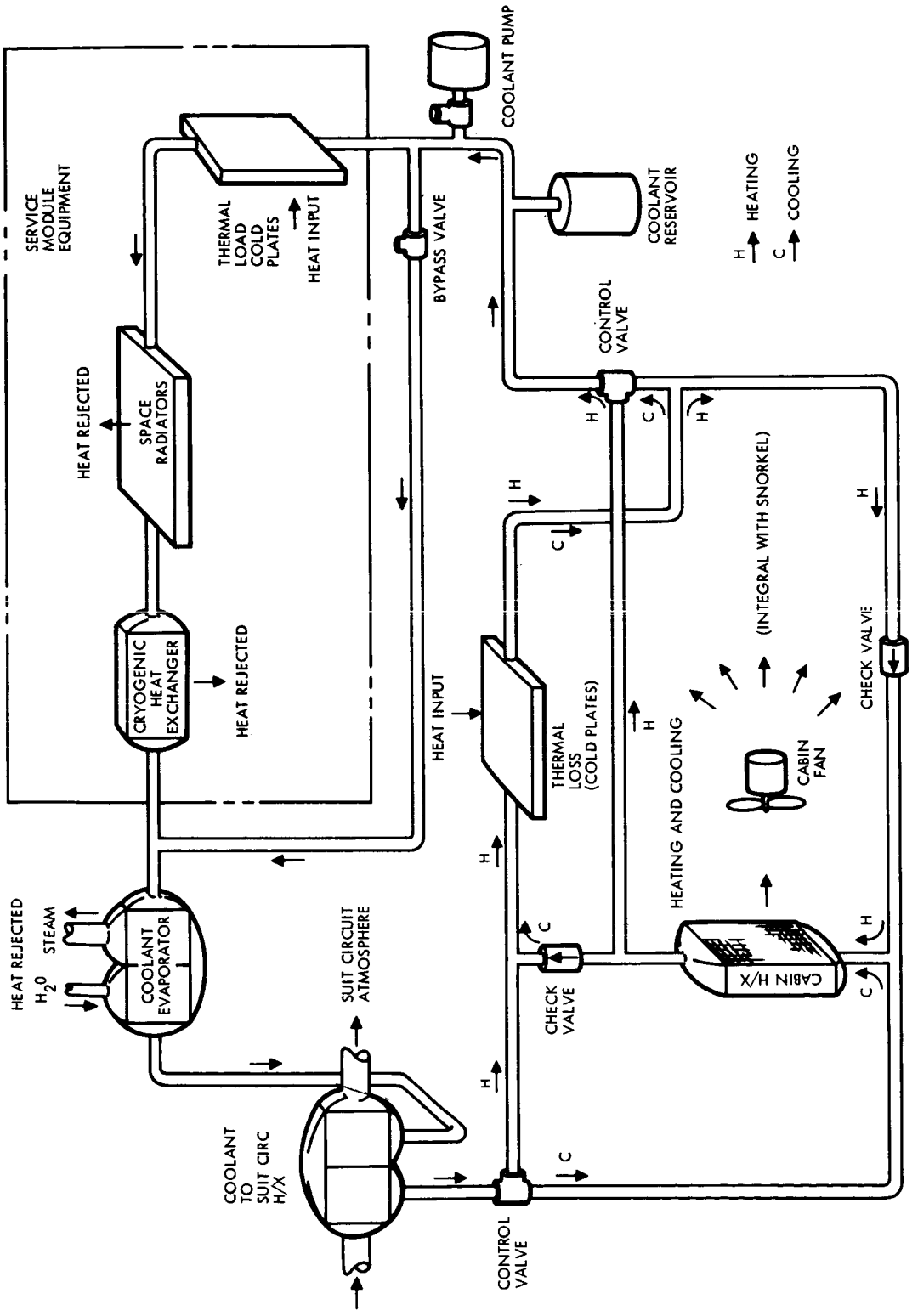

Figure 73. Coolant Loop---Functional Diagram

An anticipator that will not require penetration into the glycol lines is being considered. This will permit the pipe to act in part for the time constant of the thermally lagged thermistor bead.

Integration of the ECS coolant loop with the fuel cell coolant loop for optimizing night and solar conditions was studied but was rejected because of additional weight requirements involved in supporting a greater deployable radiator area. Deletion of the Freon heat pump used for lunar cooling is accomplished by using deployable radiators and by water evaporation. Figure 73 shows the path by which the suit cabin cooling loads are transported to the radiators.

Three methods were considered for prelaunch cooling of the cabin and equipment. GSE-circulated glycol was found to be the most satisfactory method. This is based on 10 minutes or less separation of service umbilicals. Glycol would circulate to t-10 minutes, and at t-15 minutes Freon evaporation supplied by the on-board cooling water tank would be set in operation. This would continue through 80,000 feet.

If a 10-minute service umbilical disconnect is not feasible, cooling on the pad would be achieved by using GSE-supplied Freon.

WATER MANAGEMENT

The Apollo water system (Figure 74), provides potable water for consumption by the crew members and furnishes additional water for supplemental or emergency heat transfer operations in the water-glycol normal heat transfer loop and pressure suit circuit.

Potable water at approximately 200 F is expelled from the electrical fuel cells in the service module and is routed through the spacecraft umbilical interconnect arm into the command module water system.

The relocation of the water management cooling and potable water tanks from the service module to the aft bay of the command module has resulted in a reduction of line weight and pressure drop. This new location exposes the tanks to extremely high temperatures, which result in high saturation pressures. An increase in the thickness of tank walls may be required.

The elimination of the water-filled radiation blanket concept also eliminated the need for a third water tank and approximately 240 pounds of water and resulted in a large weight reduction.

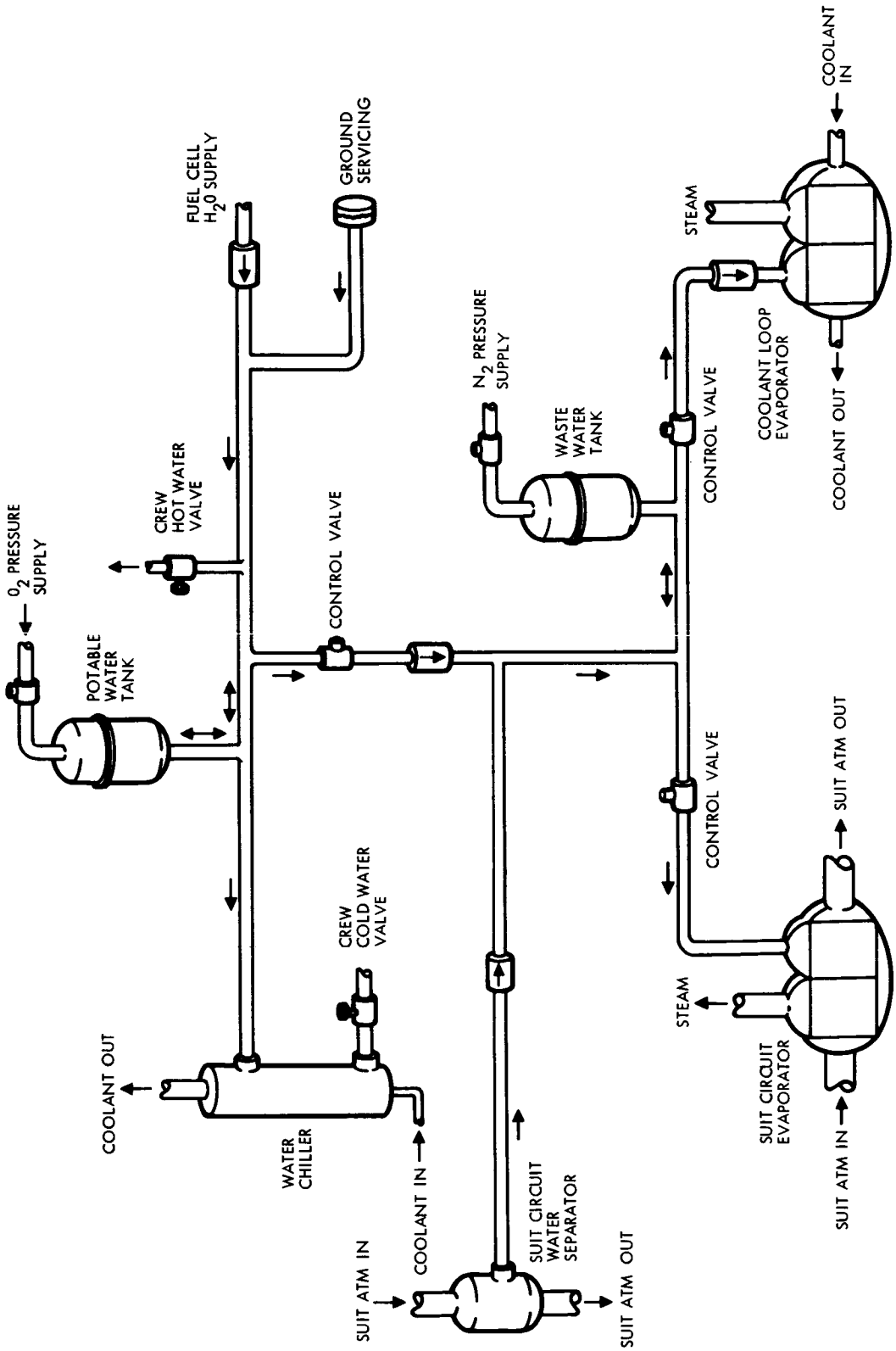

Figure 74. Water Management—Functional Diagram

SUPERCRITICAL GAS STORAGE SYSTEM

Operation of the supercritical gas storage system (Figure 75) begins with the removal of moisture from the system with gas purging. The storage tanks in the service module are then filled from GSE units. When filled to approximately 95 percent of capacity, the vessel's ground fill and vent lines are disconnected and the fill and vent valve manual closures are secured and leak-checked. Operating pressure can be realized in 50 minutes with the application of GSE-supplied heat. Because of its insulation, additional hold time is possible until the vessel reaches relief pressure.

Manual or remotely controlled shutoff valves regulate the withdrawal of gas from the vessel. When system pressure declines below operating pressure, the pressure control and bypass valve diverts a portion of the glycol heat exchanger heated gas, which will subsequently raise the pressure to operating requirements. This gas is then reheated in the glycol heat exchanger prior to use in the ECS or EPS.

Fluid density in the tank is sensed by a capacitive instrument that measures the shift in dielectric constant with change in gas density. Temperature is measured by a platinum resistor, and pressure is monitored by a pressure transducer.

WASTE MANAGEMENT

The tentative decision to dump urine after chemical treatment has changed the concept of urine disposal. The storage vessels and separator are combined to form a discharge lock reducing weight and complexity.

Air flow, induced by the blower through holes at the front edge of the urine nozzle, transports the urine through the line (where a bacteria control is added) to the urine separator (Figure 76). The urine is retained by hydrophilous material that allows the air to flow to the ECS for purification.

To discharge the urine overboard, the ported manual valve located on the control panel (Figure 77) is rotated 90 degrees. The valve core porting configuration is such that the two cabin side ports are closed before the overboard side begins to open. An optimum discharge frequency versus hardware weight is presented in Figure 78.

The flat characteristics of weight versus discharge interval in the lower range of the curve results from minimum component size required to perform the multiple functions of the discharge lock. A minimum of shutdown periods for chemical treatment prior to dumping is desired from a crewman's viewpoint as well as an operational one. Six hours is an

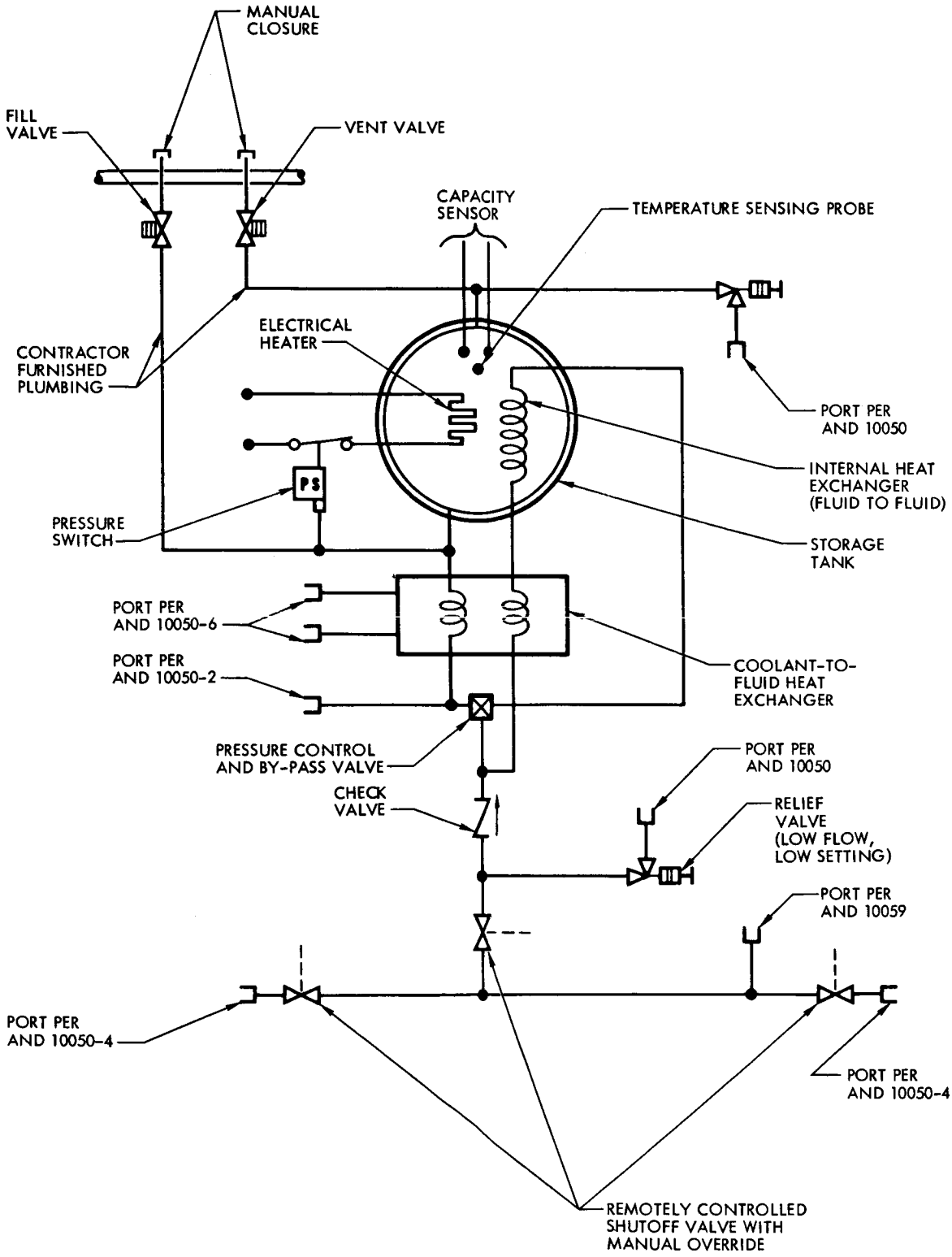

Figure 75. Supercritical Gas Storage System Schematic

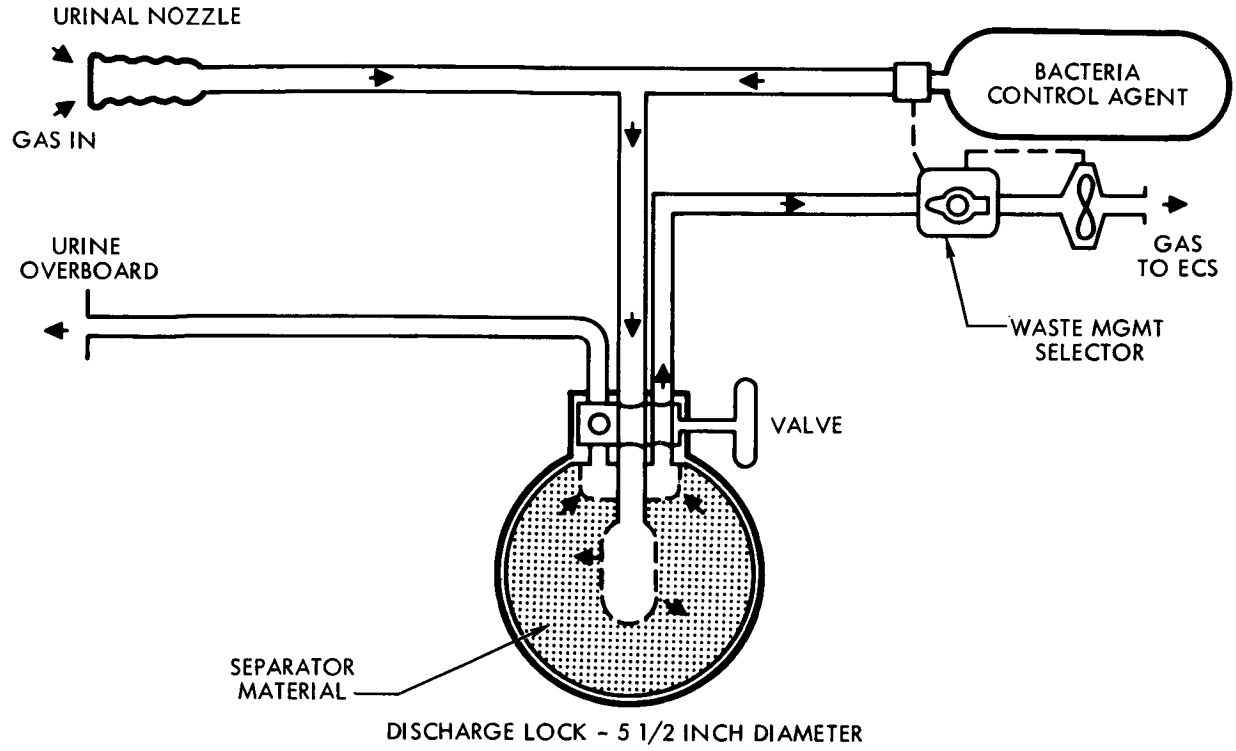

- COMPOSITE URINE STORAGE, SEPARATOR, AND DISCHARGE LOCK
- GAS REMOVED BY ΔP OF WASTE MANAGEMENT BLOWER
- MANUAL FILL-DISCHARGE SELECTOR VALVE
- URINE DISCHARGED BY CABIN-TO-SPACE ΔP
- URINE DISCHARGED AT 6-HOUR INTERVALS

Figure 76. Urine Disposal

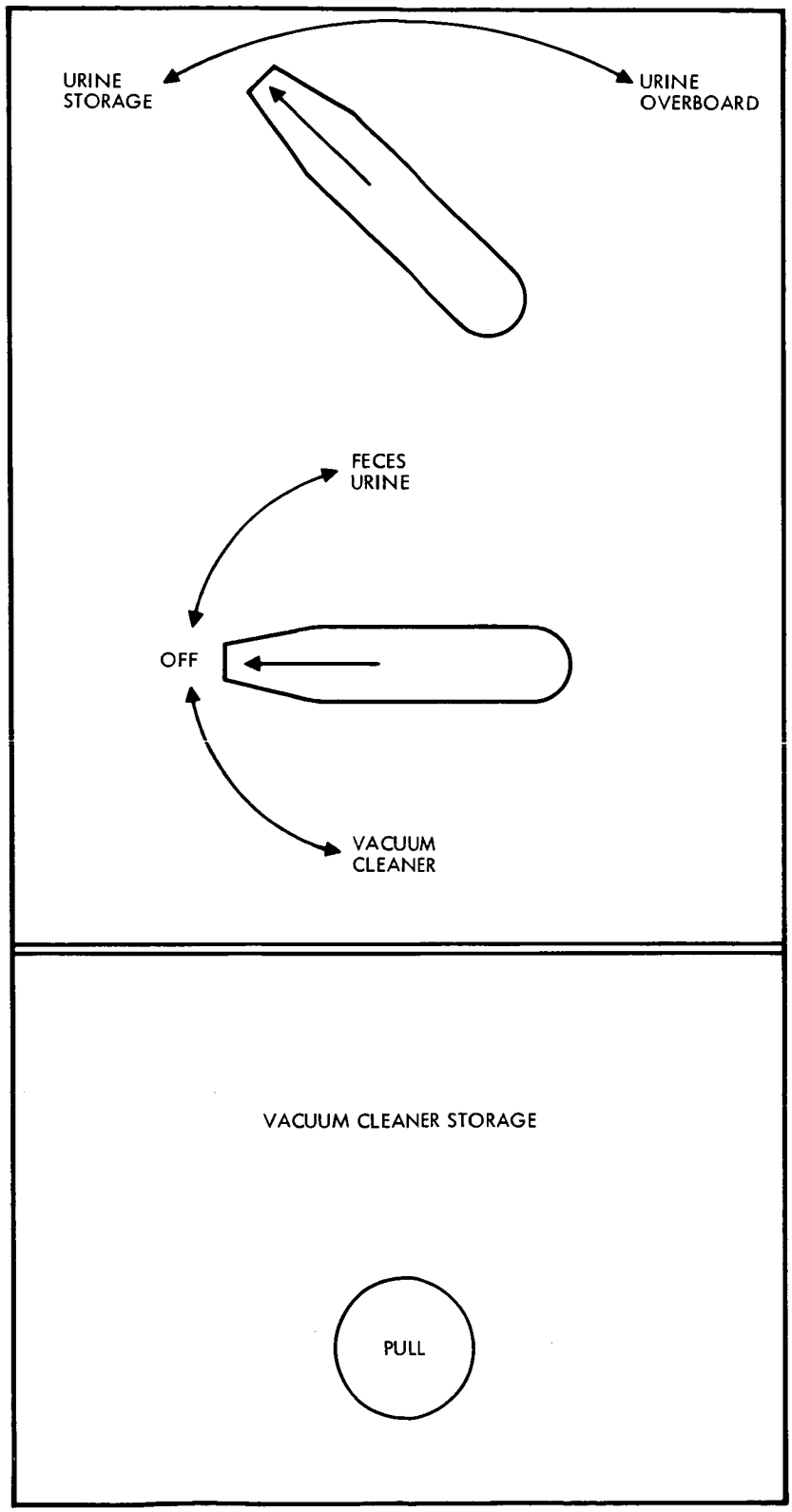

Figure 77. Waste Management System Control Panel

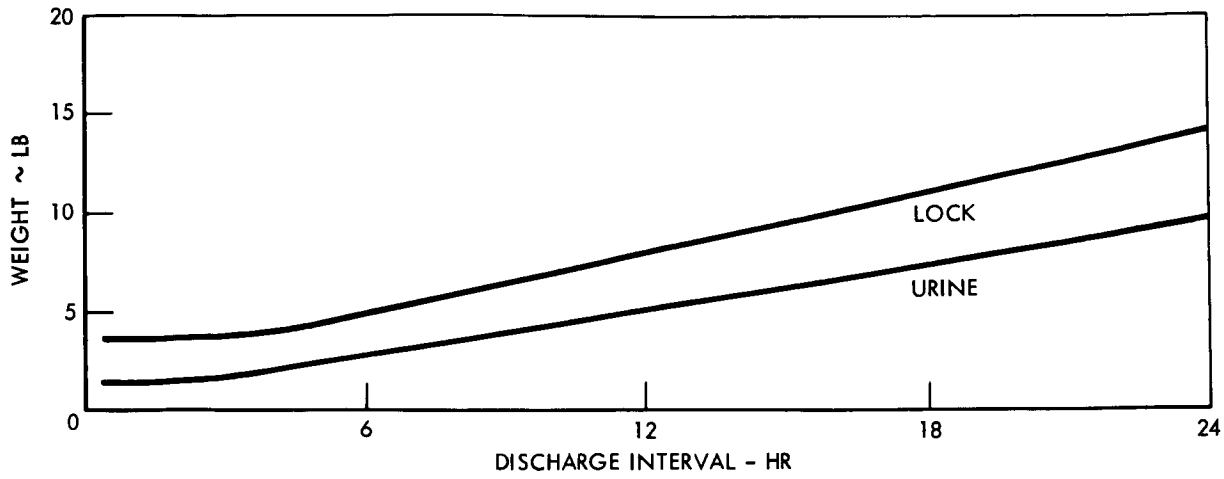

OPTIMUM INTERVAL - 6 HOURS

URINE RATE 3.2 LBS/MAN DAY

DISCHARGE LOCK WEIGHT INCLUDES:

- VESSEL
- VALVE
- PROBE
- SEPARATOR MATERIAL

- COMPOSITE STORAGE VESSEL, URINE SEPARATOR, AND DISCHARGE LOCK LIMIT PRACTICAL MINIMUM HARDWARE WEIGHT
- URINATION FREQUENCY LIMITS MINIMUM STORAGE VOLUME
- 20-MINUTE LAG FOR CHEMICAL TREATMENT LIMITS MINIMUM DISCHARGE INTERVAL
- MINIMUM PRACTICAL DISCHARGE INTERVAL LIMITED BY FREQUENCY OF 20-MINUTE "SHUTDOWN" PERIODS

Figure 78. Urine Disposal Configuration

acceptable discharge interval and entails, as noted on Figure 92, about one pound of total weight over a minimum acceptable interval.

The waste management control unit will be procured and fabricated in one complete package consisting of the panel, blower, vacuum cleaner, urine discharge valve, waste selector valve, feces odor filter, and applicable lines (Figure 79).

Wescodyne germicide is water soluble, stable under normal storage conditions, and practically odor free. Because of its complex iodine make-up, Wescodyne can be used as a sterilizer and disinfectant.

If used as a germicide in urine, 4 ounces of full-strength Wescodyne would be enough to secure the necessary action against bacteria for 2 days. In (200 ppm) solution, it can be effective for 2 weeks.

Radiation protection has been curtailed pending further study of the need for protection other than that provided by the spacecraft.

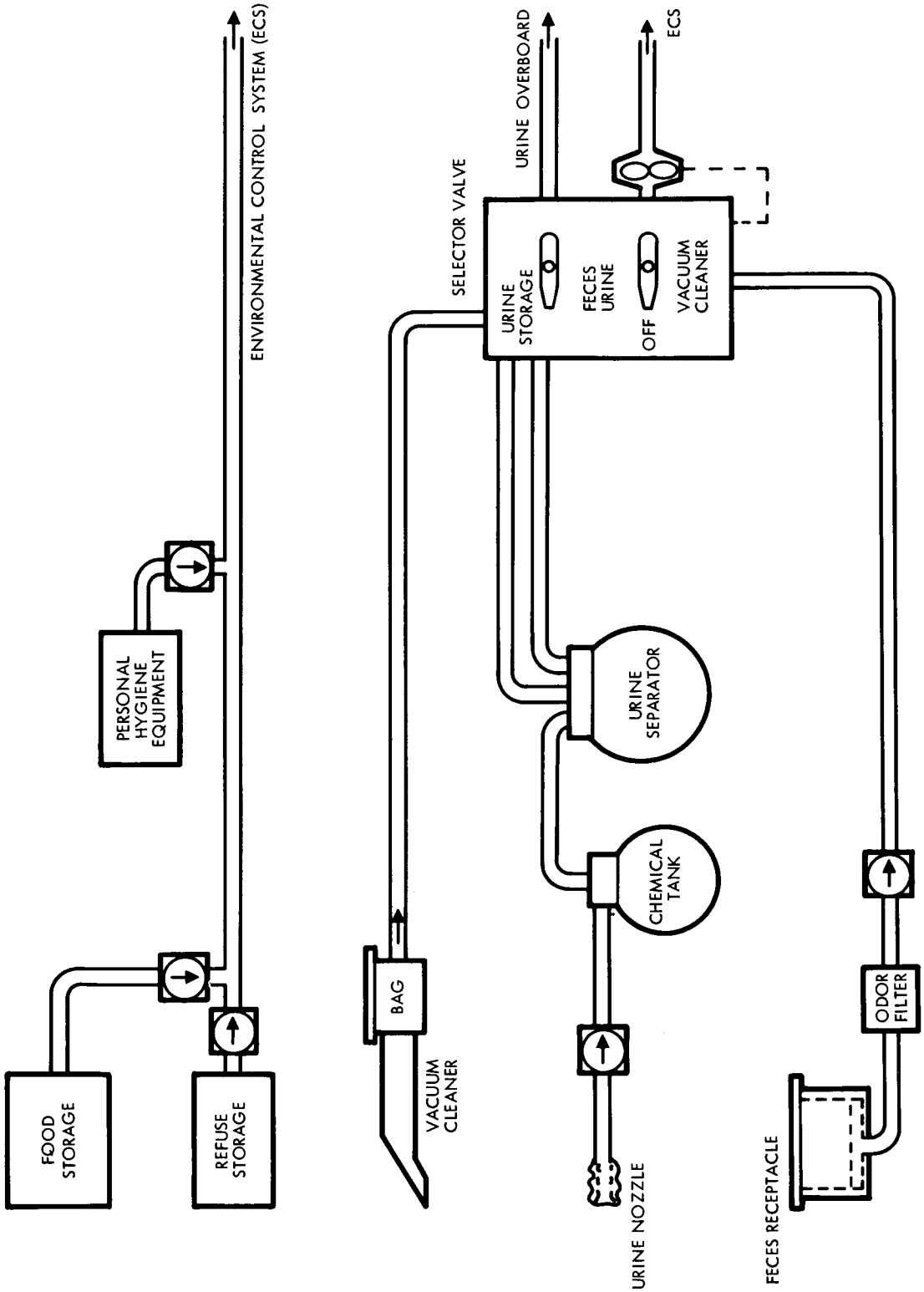

Figure 79. Waste Management System Schematic

COMMUNICATION SYSTEM

MEASUREMENT REQUIREMENTS

A typical operational measurement list was prepared as a guide in establishing the data capacities of the pulse code modulation (PCM) telemetry and the recording systems. In this study of requirements, both earth-orbital and lunar-landing missions were investigated. The lunar-landing mission had the highest data capacity requirements.

The lunar-landing mission was divided into eight phases which are shown in Table 23:

Table 23. Total Measurement and Bit Rates per Phase

Type of Measurement	Phases of Lunar-Landing Mission							
	Lift-Off	Parking Orbit	Translunar	Lunar Orbit	Lunar Landing	Lunar Launch	Transearth	Entry
Analog								
No. meas	236	264	272	265	267	267	272	187
Bit rate	25,648	26,664	26,728	26,642	26,688	26,688	26,728	25,968
On/Off								
No. meas	65	67	57	59	55	55	55	48
Bit rate	650	670	570	590	550	550	550	480
Digital								
No. meas	33	33	33	33	33	33	33	33
Bit rate	3,648	3,648	3,648	3,648	3,648	3,648	3,648	3,648
R & D								
No. meas				8	52			
Bit rate				4,832	20,496			
Total Number of Measurements	334	364	362	365	407	355	360	268
Subtotal Bit Rate	29,946	30,982	30,946	35,712	51,382	30,886	30,926	30,096
Sync Bit Rate	1,200	1,200	1,200	1,200	1,200	1,200	1,200	1,200
Spare Data Bit Rate	32,854	31,818	31,854	27,088	11,418	31,914	31,874	32,704
Total Bit Rate	64,000	64,000	64,000	64,000	64,000	64,000	64,000	64,000

Table 23 shows that a telemetry system capability of 64,000 bits per second provides about 20 percent additional data during the lunar-landing operations and about 50 percent additional data during other phases of the mission.

Other activities planned include establishing the measurement requirements for airframe (AFRM) 007, 010, and 011.

OPTICAL EQUIPMENT

Utility Telescope

The following primary functions of the utility telescope have been established:

1. Real time surveillance of the lunar surface during orbit and the observation of the lunar excursion module on the lunar surface
2. Photographic recording of the lunar surface during orbit and approach.
3. Surveillance of the earth surface
4. Observation of the docking vehicle
5. Stadiametric ranging of moon, earth, and docking vehicle

The following characteristics of the telescope are currently anticipated:

1. System resolution - 10 feet at 100 nautical miles
2. Aperture - 4 to 5 inches
3. Two fields of view - 60 degrees with unity magnification and 3 degrees with 20 power magnification.
4. Eye relief - 5 inches (permits helmeted viewing)
5. Exit pupil - 5 inches (1x) and 1/4 inches (20x)
6. Location - unpressurized upper compartment, extending out 10 inches on side
7. Two degrees of freedom - 360 degrees about pitch axis and 90 degrees about roll axis

8. Weight - 50 pounds

9. Power - 50 watts intermittent

A preliminary study layout for the telescope design and installation is almost complete.

Telescope Camera

The primary function of this camera is photographic documentation of selected portions of the mission (the lunar surface, the lunar excursion module on the lunar surface from orbit, earth's surface and, if the command module lands, the local geography and the crew members on the lunar surface) by use of the telescope.

The system characteristics are as follows:

1. System resolution - 10 feet at 100 nautical miles

2. Aperture - 4 to 5 inches

3. Focal length - 24 inches

4. Field of view - 5.5 degrees

5. Film - 70mm format, ASA 200, 120 lines per mm exposure, 1/1500 to 1/1000 at f8

6. Pulse camera to 5 frames per second

The documentation camera will be located in the unpressurized upper compartment and will be adequately shielded against radiation.

Motion Picture Camera

A 16mm camera will be located in the command module and will be used for recording the rendezvous, docking, launch and recovery of the lunar module, earth landing, crewmen inside and outside the vehicle, and panel displays.

The system characteristics are as follows:

1. System resolution - 40 lines per mm

2. Frame rate - pulse from 1 to 12 frames per second and 16 or 24 frames per second

3. Magazines - four 200 feet interchangeable

4. Auxiliary equipment - pistol grip, wide angle and telephoto lenses

5. Time correlated with master clock when camera is inside spacecraft

6. Automatic exposure controls

7. Film - color, ASA speed 160, 80 lines per mm

8. Weight - 20 pounds (camera and magazines)

9. Operation - 28 volts dc or manual

10. Power requirement - 40 watts, intermittent

11. Drive - electric or band-wound spring

Hand-Held Camera

An additional camera is presently planned for hand-held operation inside or outside the spacecraft. It is estimated that 35 or 70mm format will be used and will be simplified for handling by crew members in space suits.

Television Equipment

A block diagram (Figure 80) of the RCA analog TV system is being studied. The spaceborn camera, a motor-driven shutter to reduce smear, a sync generator, and a monitor will comprise the RCA spaceborne equipment. RCA ground equipment for the test consists of a dual scan converter, a sync separator, two vidicon cameras, a video switch, and a flicker compensator. Video data will be routed to a local TV station and recorded on tape. RCA has included a monitor to make viewing of the actual picture from the camera possible. This provision permits direct comparison with the picture of reduced bandwidth.

Figure 81 is a block diagram of the Raytheon digital TV study equipment.

The Raytheon analysis indicates that performance equivalent to the 7 bit per sample conventional TV picture can be achieved with 3 bit samples.

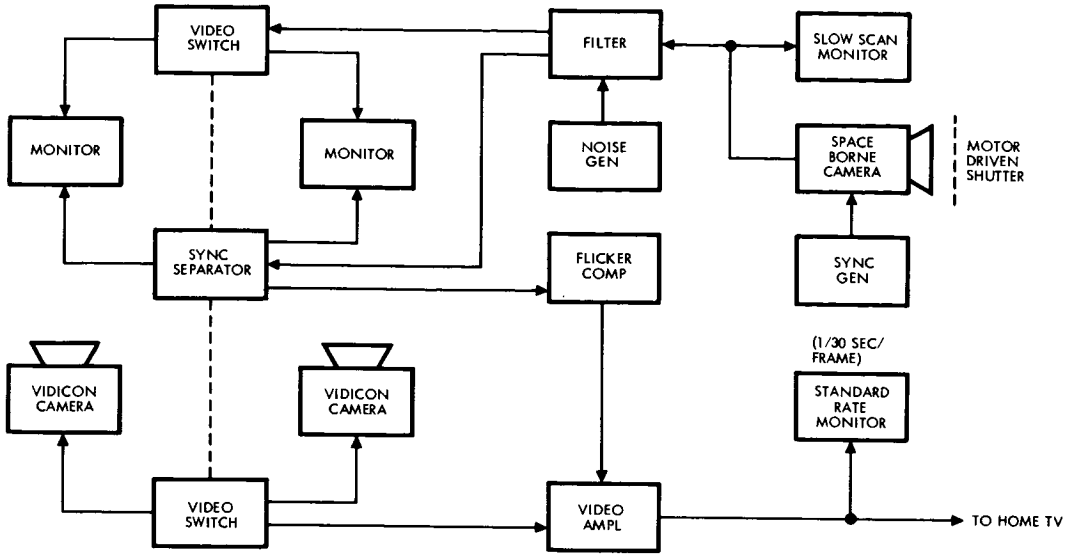

Figure 80. RCA Analog TV System

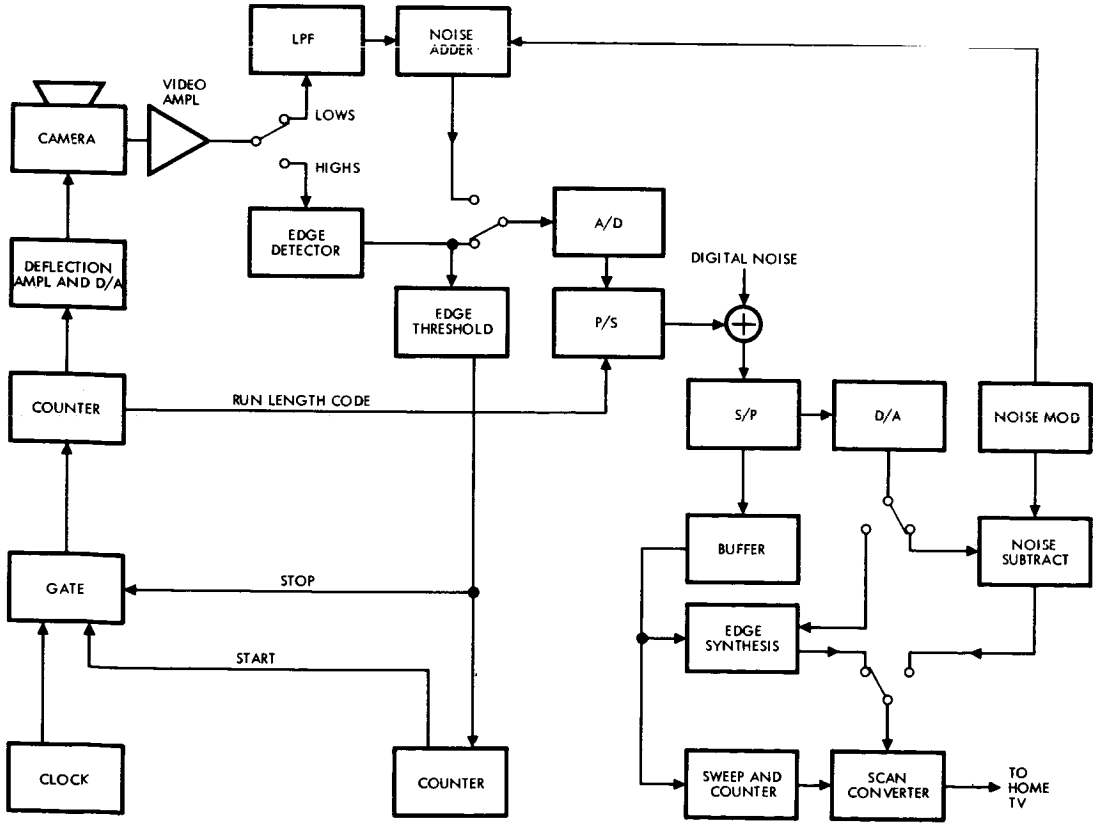

Figure 81. Raytheon Digital TV System

Raytheon equipment in the spacecraft would be the electrostatic vidicon, deflection circuitry, and the processor. The ground equipment for the Raytheon study is included in Figure 81.

Figure 82 illustrates one of the scenes prepared for the comparative TV system evaluation. A pattern to be used in the final evaluation is shown also in Figure 82.

Figure 83 is a proposed method for televising the three astronauts in their seats if such viewing is required. Secondary TV camera locations for coverage of crew activity in the command module and for viewing through the telescope will be provided. A camera may be removed from the primary to any of the secondary positions.

Figure 84 shows the picture quality obtained through fibre optics under the poorest conceivable conditions.

CENTRAL TIMING EQUIPMENT (CLOCK)

Output requirements for the spacecraft central timing equipment have been up-dated and are shown in Table 24.

A subsequent evaluation has indicated that the NASA R&D elapsed time code generator could not be modified simply for Apollo operational usage and that creating a new design, based on the need for added reliability and for outputs required to synchronize other spacecraft subsystems, would be a better course of action.

DATA HANDLING EQUIPMENT

Preliminary signal conditioner specifications were completed for amplifiers, frequency modulation demodulators, bridges, voltage attenuators, phase-sensitive demodulators, and amplitude modulation demodulators.

Signal conditioners will be provided in the various other subsystems (such as stabilization and control) to the greatest extent. This effort will reduce interface problems to a minimum and will decrease the buffering circuitry requirements. An output range of 0 to 5 vdc for most signal conditioners will permit joint usage of the in-flight test system (IFTS) and of the data handling equipment.

PCM TELEMETRY EQUIPMENT

An evaluation based on anticipated operational measurements resulted in establishing two input levels: 0 to 250 millivolts and 0 to 5 volts. The 0 to

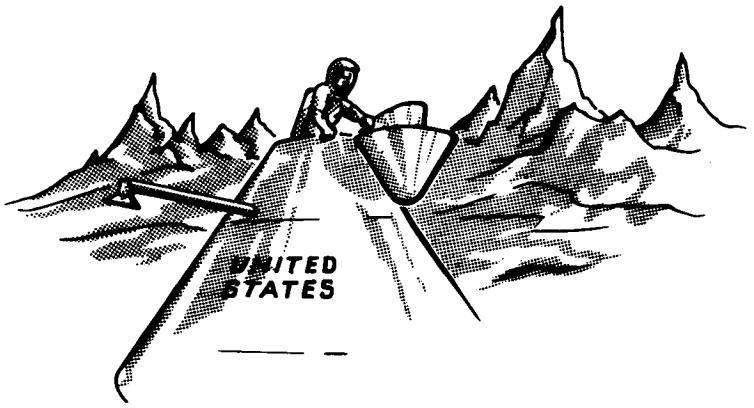

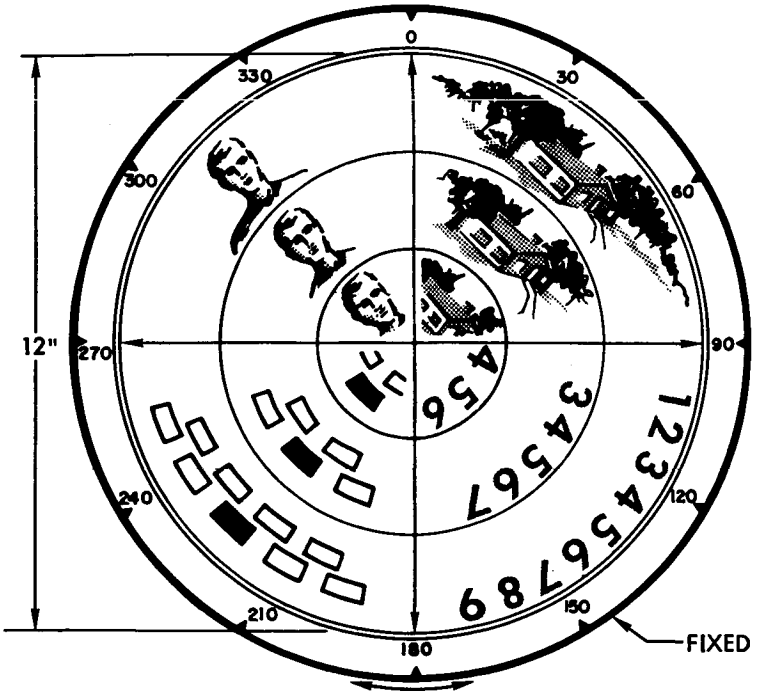

ROTATES CW OR CCW 1 TO 30 RPM

Figure 82. Suggested Scenes for Subjective Evaluation

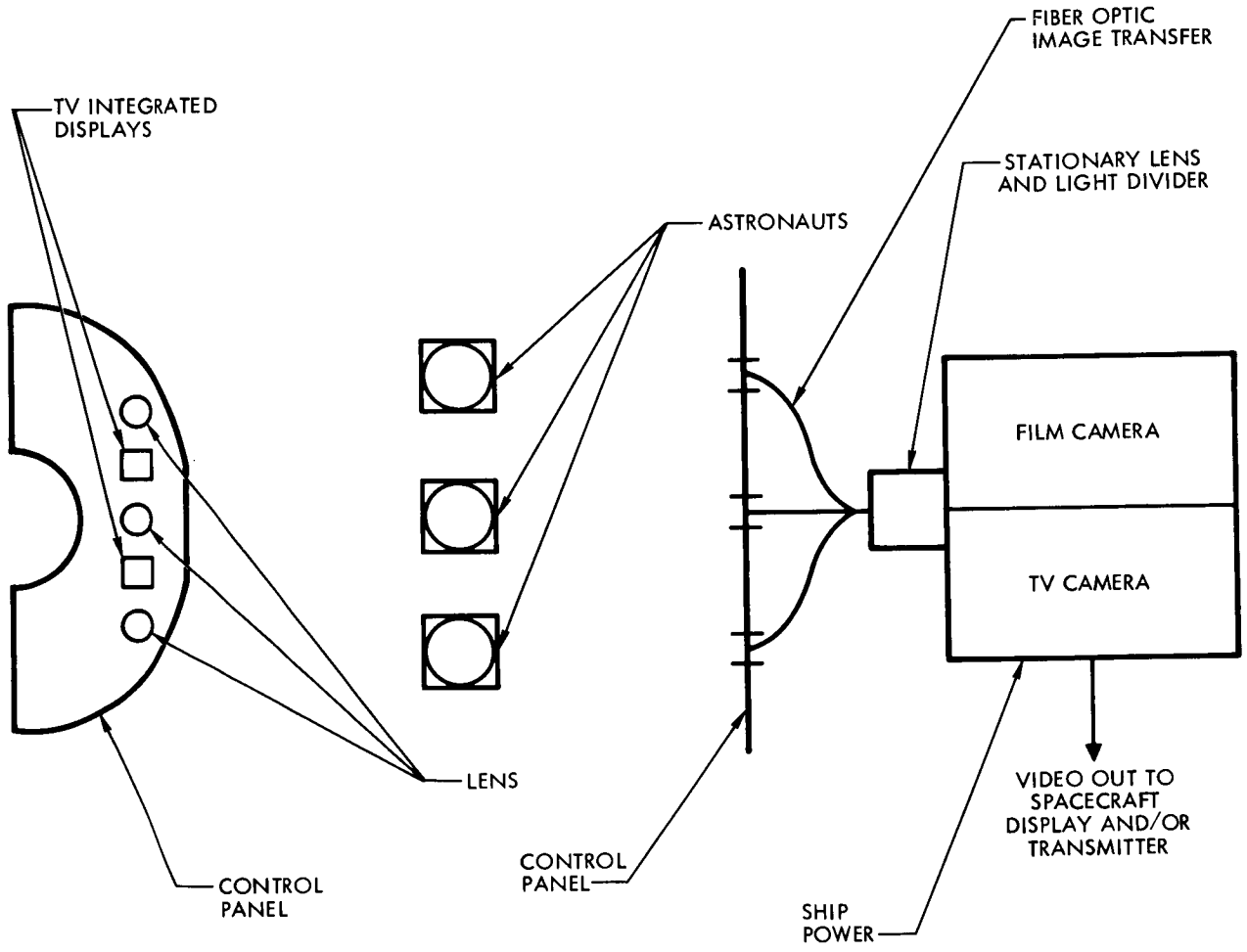

Figure 83. Proposed Method for Televising Astronauts

CONFIDENTIAL

7005-60-1A

Figure 84. Television Viewing Through Fiber Optic Bundle

CONFIDENTIAL

Table 24. Central Timing Equipment Time Code and Synchronization Outputs

Number	Frequency	Shape	Peak-to-Peak	Impedance	Application
1	512 kc	Square	10v	10k	T/M
1	512 kc	Sine	10v	10k	TV
1	32 kc	Square	5v	1k	IFTM
1	8 kc	Square	5v	10k	Display
1	4.8, 3.2, or 2.4 kc	Square	---	10k	Power system
1	100 cps	Square	5v	10k	Display
2	10 cps	Square	5v	10k	Power system
3	1 cps	Square	5v	10k	Display, T/M
2	0.1 cps	Square	5v	10k	Power system
3*	BCD parallel format, 27 bits	Square	5v	10k	Display time data for PCM T/M cameras
1*	Serial code	Under study	5v	10k	Sequencer and growth potential

* Time code outputs

250 millivolt input range will be used to avoid, wherever feasible, the requirement for amplifiers. The 0 to 5 VDC input range will be used wherever adequate sensor output is available or wherever amplifiers are required.

Figure 85 is a block diagram illustrating a number of concepts that have been investigated in optimizing the data-handling equipment. The telemetry equipment illustrated is based upon an output bit rate of 64,000 bits per second. Figure 85 illustrates the probable (PCM) telemetry format. A typical measurement sampling format is shown in Table 25.

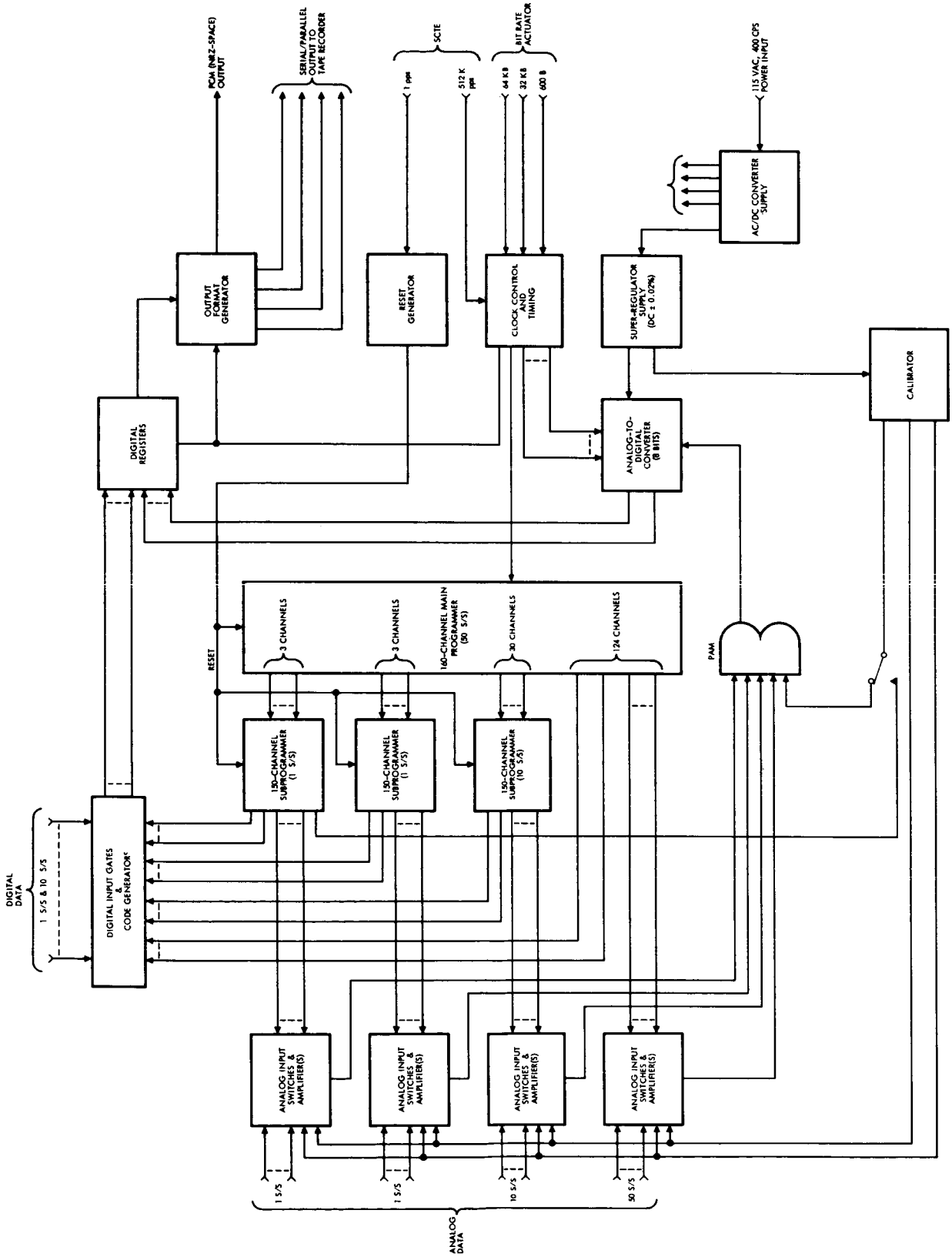

Figure 85. PCM Telemetry Equipment

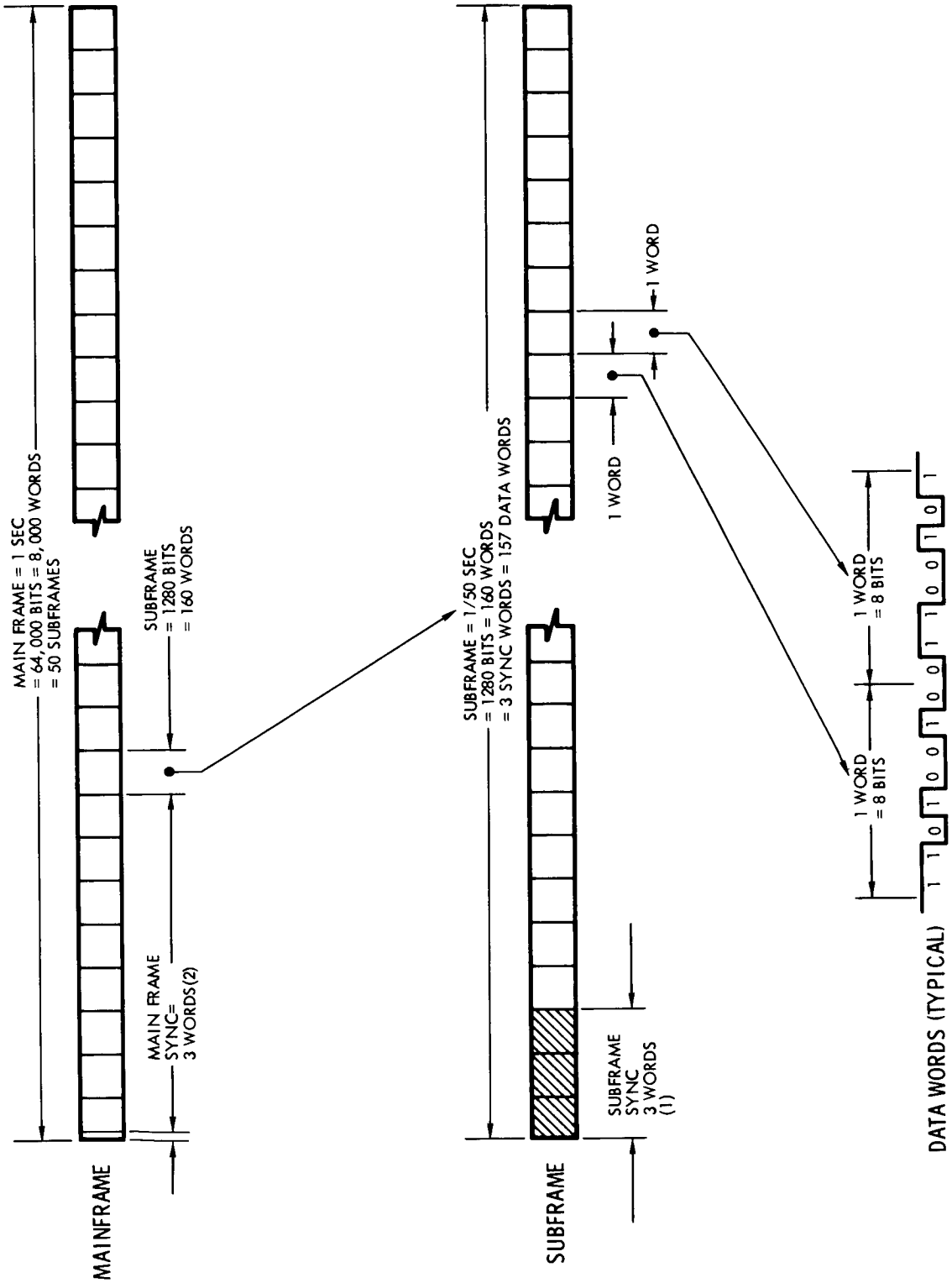

Figure 86. PCM Telemetry Format

Table 25. Typical Measurement Sampling Format

Sampling Rate (per sec)	Quantity of Measurements*	Total Word Rate (per sec)
500	4	2,000
100	25	2,500
50	34	1,700
10	150	1,500
1	300	300
		8,000

*Includes analog, event, digital, and sync words

Techniques for automatic and semi-automatic measurement format programming have been investigated to provide a high degree of data-handling flexibility. During a lunar-landing mission, the variations in measurement requirements throughout various mission phases make reprogramming of the telemetry equipment desirable.

Implementation of measurement programming would affect the rectangular matrices located in the main and subprogrammers. Several sets of matrix plug-in modules can be carried along for program changes.

Of the analog-to-digital conversion techniques investigated, the successive approximation technique appears most promising.

Several circuit configurations for the analog differential input switches have been considered. The approaches which appear to be the most apt are twofold: single transistor circuits per leg with direct-coupled control and floating supplies and back-to-back transistors per leg with transformer-coupled control.

Selective bit rate control circuitry was investigated for incorporation into the PCM telemetry clock control and timing circuitry. If the circuitry shown in Figure 87, were employed, a crew member could select any one of three bit-rate modes. The bit rate actuator will (at a time N-frames later)

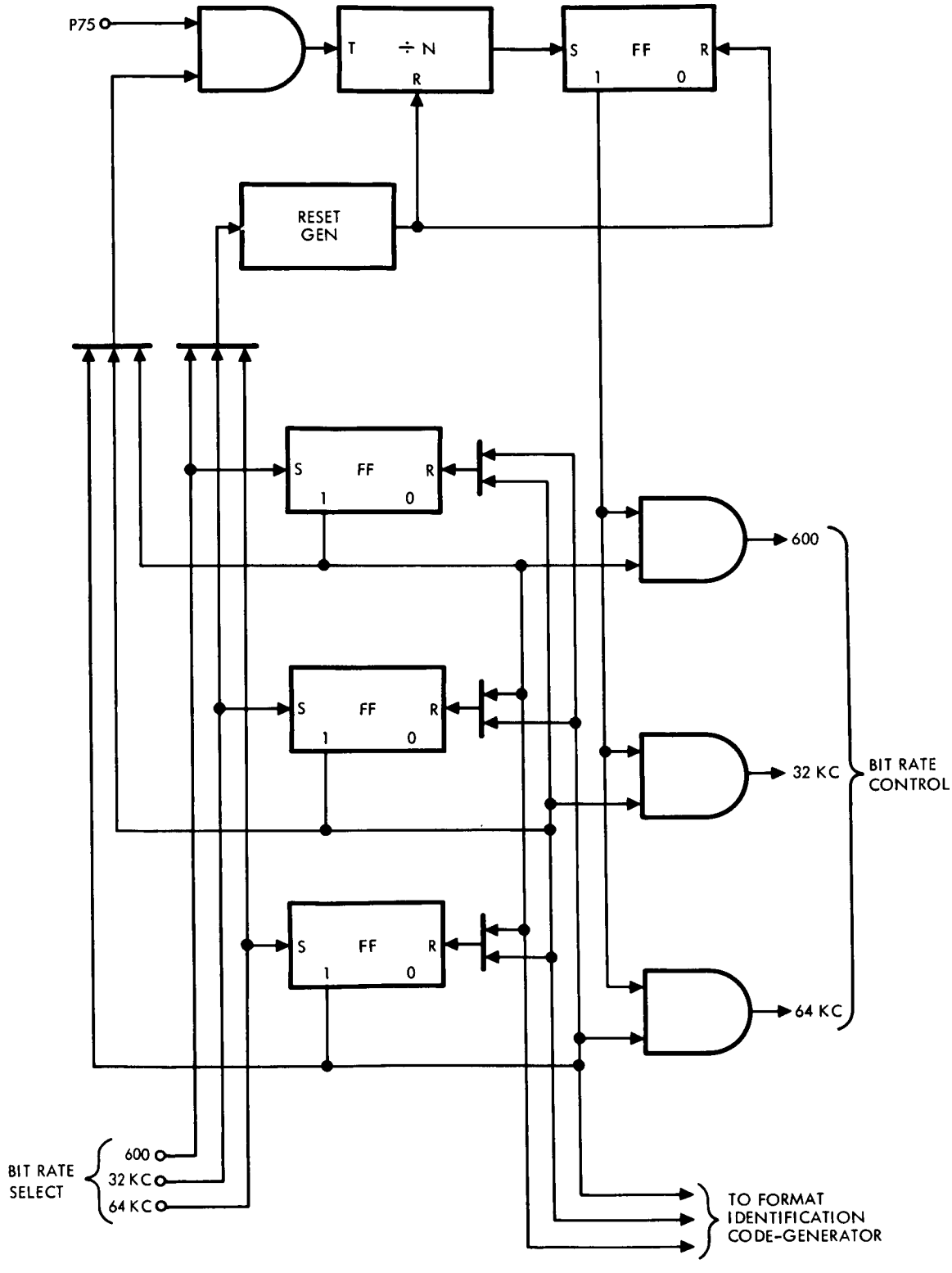

Figure 87. Bit-Rate Actuator

control the PCM telemetry equipment into the desired bit rate. Figure 88 illustrates one approach for integrating the bit-rate control circuitry into a typical PCM programming scheme.

Measurement signal PCM input telemetry equipment interface solutions have been established as follows:

1. Signal source impedance of 2000 ohms or less with a maximum of 5000 acceptable

2. Input impedance to the PCM telemetry equipment of 500, 000 ohms minimum during sampling

3. Measurement input levels of 0 to 250 mvdc and 0 to 5 vdc

DATA STORAGE EQUIPMENT

Two identical on-board tape record/reproduce units are presently planned although weight considerations may result in use of a single unit. Digital data will be recorded at the rate of 16, 000 bits per second per channel, the number of channels used being dependent upon the maximum data rate selected. A block diagram for a postulated 64, 000 bit per second data rate is shown in Figure 89. Reconversion to a serial format is planned if in-flight transmission of data is required.

Requirements for the transmission of digital data from earth to the spacecraft have been updated and reviewed. At the present time, the combination of requirements is not strong enough to justify a digital up-data link. The Gemini up-data link was reviewed from available information. A comparison with postulated Apollo equipment requirements indicates that a number of changes will be necessary. It is anticipated that future coordination with MIT on computer input equipment, computer memory loading, and calculated navigation and guidance reliability will aid materially in determining whether requirements exist for an up-data link.

A weight of 16. 3 pounds and power consumption of 2. 5 watts have been estimated for the data decoder and storage/display equipment. This estimate does not include receivers for near-earth operation.

VHF CIRCUIT MARGINS

Circuit margins for VHF communications in the near-earth phase have been reevaluated. Calculations are now being based on 64, 000 bits per second. Voice capability via the VHF/AM transceiver is 4200 nautical miles with 0 db circuit margin at a 10-watt transmitter power level. Because of

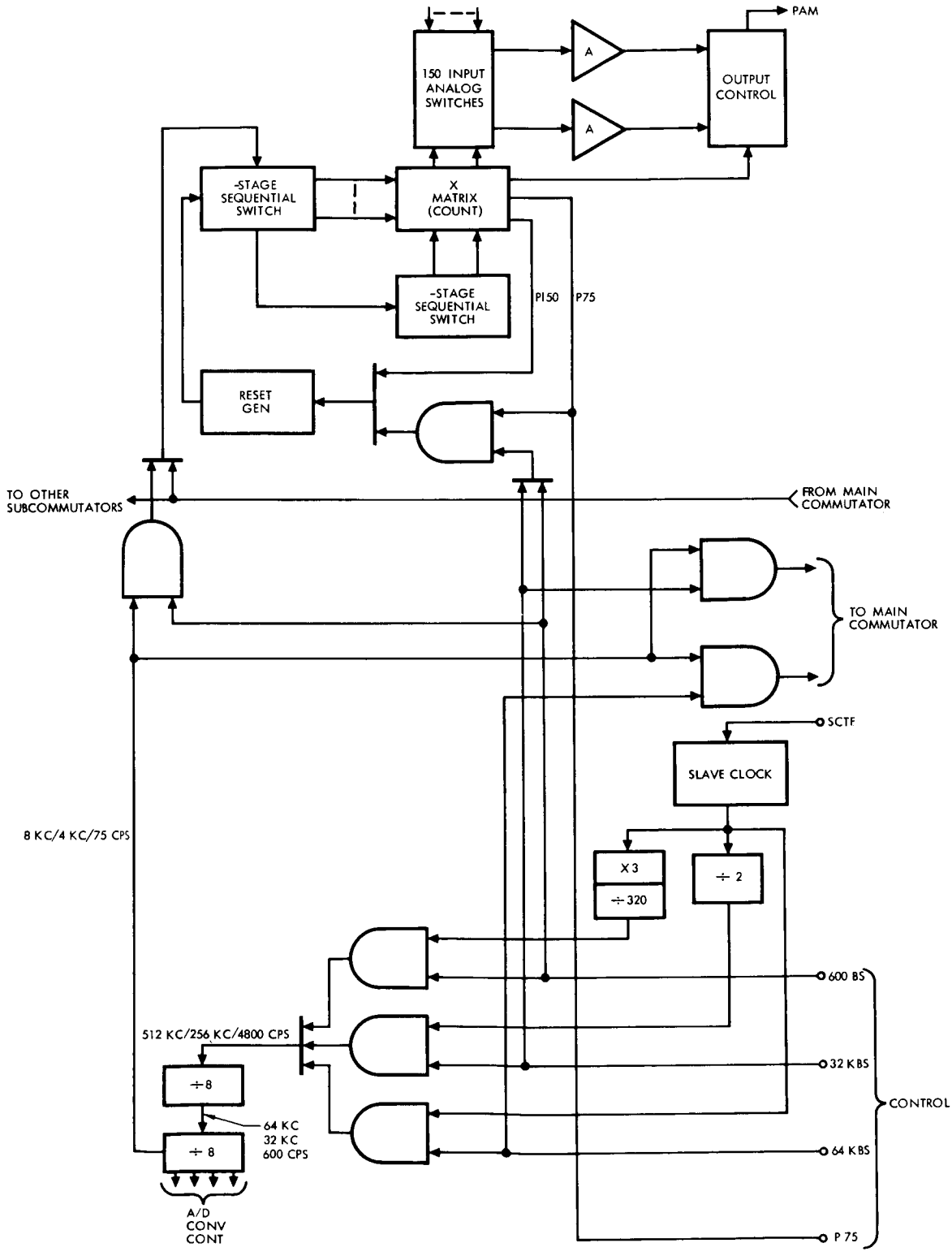

Figure 88. Bit-Rate Controller

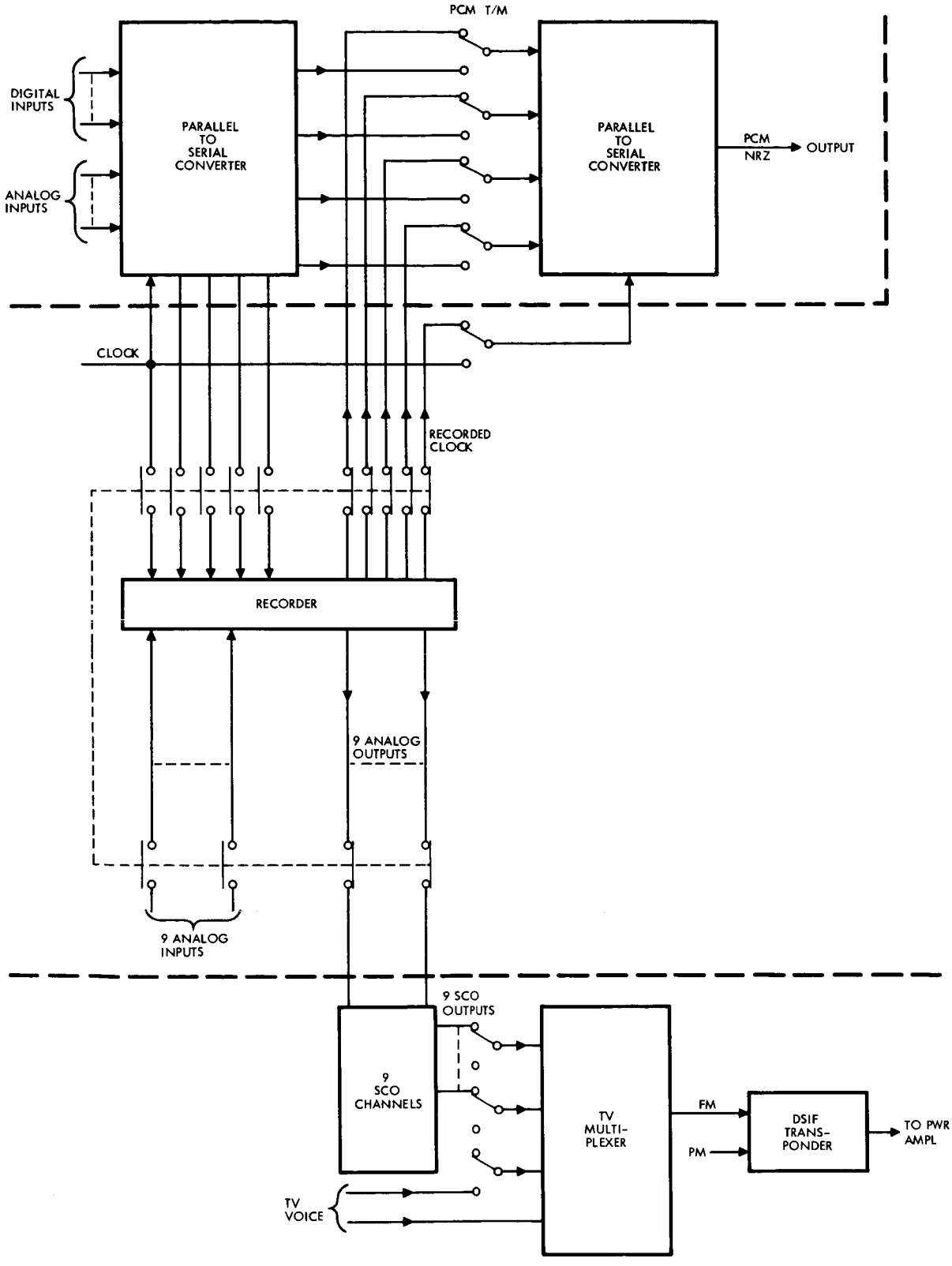

Figure 89. Data Storage Equipment

the high input power requirement of the VHF/AM equipment, consideration is being given to reduction in output power to the 5-watt average power level. A reduction in range capability to 3000 nautical miles is the penalty for this factor-of-two reduction in VHF/AM energy requirement.

LUNAR EXCURSION MODULE INTERFACE REQUIREMENTS

For compatibility with estimated lunar-excursion module requirements, the command module telecommunications equipment may need the following capabilities:

1. Receiving, demodulating, recording, and transmitting to earth an unknown quantity of lunar excursion module telemetry data. Capability for these operations can be accomplished by addition of a VHF/FM receiver in the 400 to 450 mc band. The demodulated output of this receiver can then either be recorded or multiplexed onto the cislunar communications link for transmission to the deep space instrumentation facility (DSIF).

2. A two-way communication command module to lunar-excursion module and to astronaut voice. The VHF/AM transceiver can be used for this purpose if the belt pack transceivers are designed for operation at 243 mc. The personal communications transceiver and antenna would then no longer be required.

3. A narrowband telemetry link to lunar excursion module from the command module. Either the VHF/FM or VHF/AM transmitter could be used for this purpose.

The lunar excursion module does not appear to result in major rf systems changes other than those stated.

Modulation Technique Study

Issuance of an interim report on the modulation technique study has been delayed to allow the inclusion of recently generated information relating to Apollo command module lunar excursion module communication and to encompass preliminary designs for the cislunar communications link.

The mode structure for the cislunar communications link has been revised. Modulation techniques for the present mode concepts have been established and are presented, along with other pertinent information, in Table 26. Digital transmission of television is considered as an alternative to the FM transmission presented in the table. The current estimate of transmitter power required to yield equivalent picture quality is 19.5 watts

Table 26. Cislunar Communication Modes and Parameters With Analog Television Transmission

Modes	Channel	Modulation Technique	Worst Case Transmitter Power Requirement (Watts)	Recommended Value (Watts)	Worst Case Margin (db)
A	64,000 BPS telemetry 3 kc voice	PCM/PM/PM FM/PM	4.9 (1)	5	0.1
B	Ranging	PRN/PM	0.155 (2)	0.2	1.1
C	Narrow band telemetry 2500 BPS	PCM/PM/PM	0.2 (4)	0.2	0
D	Tape recorder playback, 3 kc voice	FM/FM	0.725 (4)	5	+8.4
E	Television (1 mc) 64,000 BPS telemetry 3 kc voice	FM PCM/PM/FM PAM/FM	17.0 (4)	20	+0.7
F	LEM Relay, 32,000 BPS T/M	PCM/PM	5.0 (1)	5	0
	LEM voice (3 kc)	FM	0.151 (4)	0.20	+1.2
G	3 kc voice	FM	0.151 (4)	0.20	+1.2
H	Emergency key	FSK	0.132 (2)	0.20	1.8

(1) Use of directive spacecraft antenna and 28-ft ground antenna
(2) Use of omni S/C antenna and 85-ft ground antenna
(3) Use of omni S/C antenna and 28-ft ground antenna
(4) Use of directive S/C antenna and 85-ft ground antenna

Power computations are at lunar distance and assume parametric amplifiers in receivers.

for the digital technique. If digital TV transmission is used, other transmission modes are not expected to differ from those presented in the table.

The theoretical analysis of modulation techniques reported in the previous quarterly report have been revised to include the effects of practical limitations in modulation and demodulation equipment. Comparison of techniques studied, on the basis of required receiver input signal-to-noise ratio in the equivalent AM bandwidth, is presented in Table 27. It is evident from consideration of the table that wideband FM, demodulated by a modulation tracking phase lock receiver, is the most efficient technique available.

An evaluation of the stability of the phase lock loop differential equation is under way to provide a basis for selection of the parameters of cislunar communications link modulation. Both the modulation restrictive and the modulation tracking phase lock loops are subject to this evaluation.

Analog data (including voice) will be recorded on the remaining tracks with possible playback by means of frequency multiplexing and transmission over the wide band TV channel.

Each recorder will weigh not more than 20 pounds and will have a power consumption of not more than 30 watts.

C-Band Transponder

Initial investigation on the relative merits of the C-band comparator configuration as compared with a phase wobbulator approach has been completed. An amplitude comparator will be employed. A preliminary block diagram of the recommended comparator system is illustrated in Figure 90.

Prime factors affecting the selection of the comparator approach were the circuit margins and obtainable coverage.

Evaluation of the circuit margins for these three configurations were based on the following AN/FPS-16 radar characteristics:

Peak power - 90 dbm (1 mw)
Antenna gain - 43 db
Receiver sensitivity - 100 dbm

Figure 91 indicates typical FPS-16 range tracking errors as a function of signal to noise ratio.

Table 27. Theoretical and Practical Comparison of Single Channel Modulation Technique

Technique	Demodulator	Theoretical Required Input S/N, DB	Practical Required Input S/N
Wideband FM	Modulation trading phase lock loop	8.6	12.4
Wideband FM	FM feedback receiver	11.0	13.0
Biphase PCM regular simplex	Optimal product demodulation	11.8	15.1
Wideband FM	Conventional FM receiver	14.6	16.0
Biphase PCM binary coding	Optimal product demodulation	14.4	17.7
Single bit deltamodulation	Optimal product demodulation and low-pass filter	15.2	17.7
PCM FM binary coding	Matched filter bit detection	16.2	20.0
DSBSC/AM or SSB-AM	Receiver with carrier reinsertion	25.0	25.0
Narrowband PM	Phase lock loop	25.7	25.7
Shannon theoretical limit		4.6	

REMARKS

Signal-to-noise ratios (S/N) listed are those required to yield an output average signal to average noise of 25 db, or a peak-to-peak signal to rms noise ratio of 34 db. Input S/N is measured in equivalent AM bandwidth of twice the highest baseband frequency.

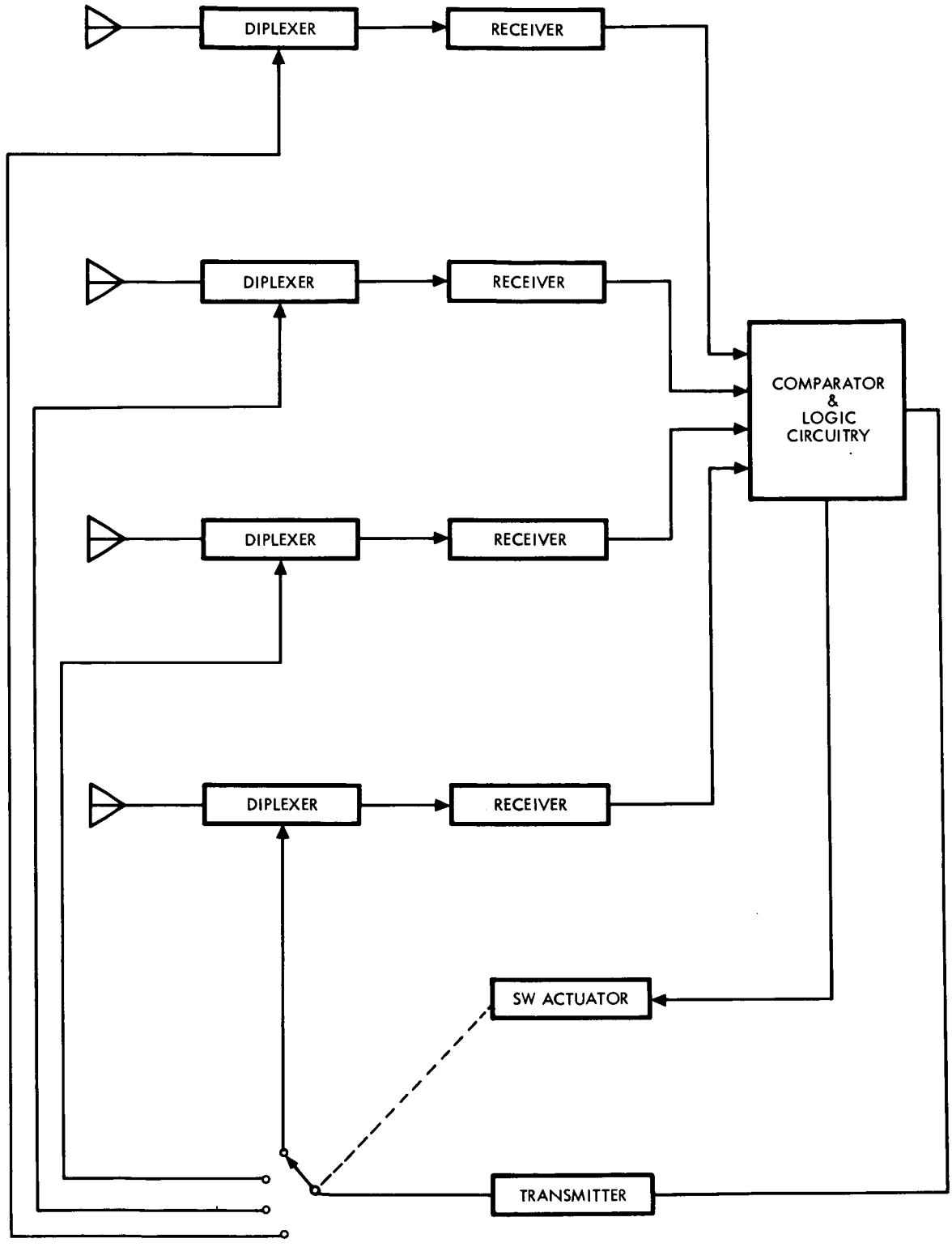

Figure 90. Four-Element Comparator with Four Receivers

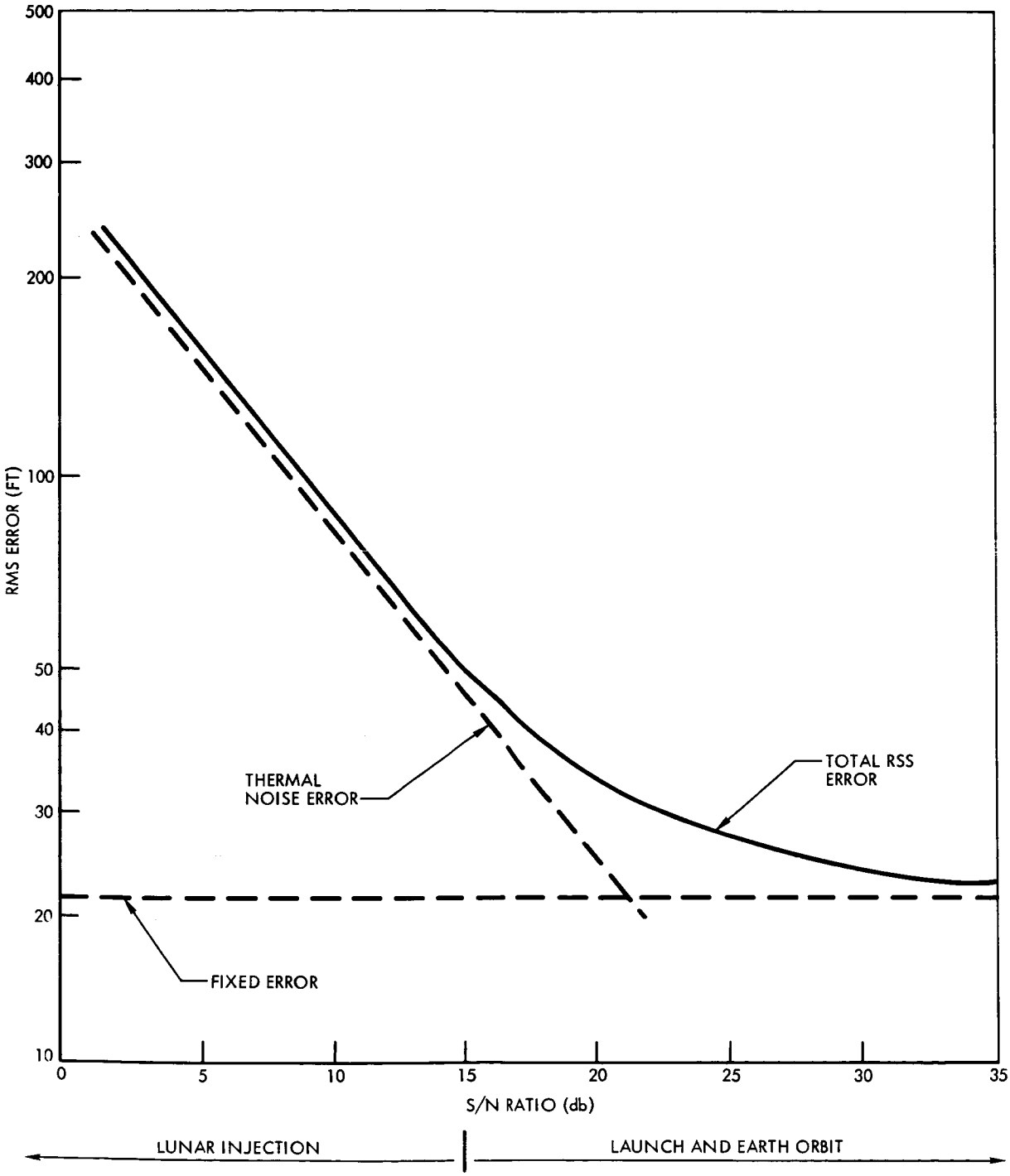

Figure 91. Typical FPS-16 Range Tracking Error Versus S/N Ratio

A transponder transmitting power level of 2.5 kw peak (64 dbm), using additional 2 kmc stations with the existing networks, was selected, the choice based upon maximum tracking requirements of 4000 nautical miles slant range.

The circuit quality chart shown in Table 28 indicates the superior performance of the four-element amplitude comparator. The increased antenna system losses of the phase-shifting and time-diversity configurations are due to the power-splitting losses when the same antenna beamwidth is used in all cases.

Table 28. Spacecraft to Radar Quality Chart

Technique	Phase Shifting		Amplitude Comparator		Time Diversity	
Tracking Slant Range (nm)	4,000	10,500	4,000	10,500	4,000	10,500
Beacon transmitted power gain (dbm)*	64	64	64	64	64	64
Space losses, (db)	188	196	188	196	188	196
Antenna system loss (db)**	11	11	7	7	10	10
Signal power at ground radar antenna (dbm)	-135	-143	-131	-139	-134	-142
Ground radar receiving sensitivity (dbm)	-143	-143	-143	-143	-143	-143
Antenna element on-axis margin (db)***	8	0	12	4	9	1

MOA = (Gains-Losses)-(Ground Radar Receiving Sensitivity)
= (PT-(ls+)-(Pgr)

* $LS = \frac{10\ LOG}{(\lambda\ 4\pi\ range)^2}$ + a fading factor of 3 db

** Beacon transmitted power: 2.5 Kilowatt, peak

*** Add +7 db to MOA if parametric amplifiers are used on AN/FPS-16

A comparison of the circuit margins, as a function of the aspect angle for the three configurations considered, indicated the best angular coverage with the four-element amplitude comparator. Figure 92 illustrates this coverage in which representative antenna locations are used.

Radio Recovery Aids

Initial study of radio recovery aids was completed to determine selection of optimum radio recovery aid equipment for the Apollo command module. Because of the large area over which search operations may need to be instituted, both HF and VHF equipment are recommended.

The factors affecting equipment selection are performance capability for automatic direction finder (ADF), capability for voice transmission, range, spacecraft specifications (weight, size, power requirements, etc.), and compatibility with existing search equipment.

The consideration of these factors led to the selection of the following:

1. HF Equipment

   For beyond-line-of-sight voice communication and direction finding, an HF transceiver will be employed. Operation would be switched from a beacon mode with peak power output of 5 watts to voice transmission of 10 watts of peak envelope power. Communication ranges in excess of 1000 miles, having a location accuracy of about 14 nautical miles, can be achieved at these power levels by the Federal Communications Commission (FCC), the Coast Guard, the Federal Aviation Agency (FAA), the Navy, and by other direction finding (DF) stations.

2. VHF Equipment

   It is recommended that the present VHF-AM transceiver, incorporated in the spacecraft for near-earth voice communications, be used for the same function in the recovery phase. Modification of previous plans to incorporate two-channel transmission and reception capabilities is required. Power output in the recovery phase is 5 watts average power.

   A compatible 3-watt peak VHF pulse beacon is recommended for primary VHF-ADF. Compatible with International Telephone and Telegraph (ITT), ARA-25, ARA-48, ARA-50, and SARAH equipment, this beacon transmits a pulse waveform consisting of 100 usec pulses at 30 percent duty cycle. The VHF-AM transceiver can be tone-modulated at 1 kc for backup.

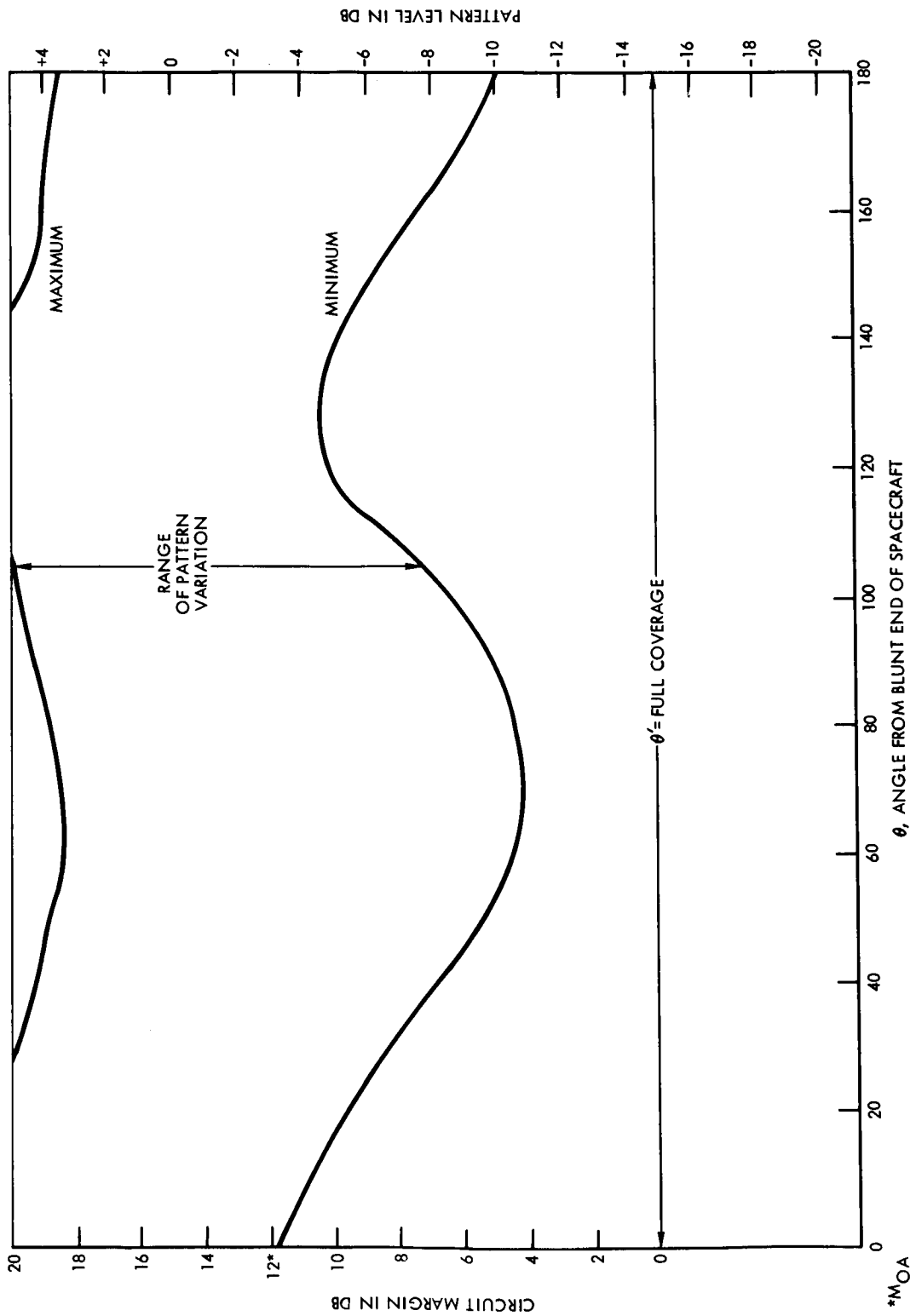

Figure 92. Circuit Margin Versus θ for a Four-Element Comparator

Severe spacecraft energy limitations impose a programming requirement for radio recovery aid utilization.

Table 29 presents tentative values derived from the radio recovery aid study and from the resulting energy requirements.

Table 29. Operating Time and Energy Requirements for Recommended Radio Recovery Aïds

Equipment	Operating Time, hr	Estimated Input, watt-hours
HF transceiver (beacon)	20	200
HF transceiver (voice)	1	15
VHF pulse beacon	8	80
VHF transceiver (voice)	2	50
345 watt-hours, total energy requirement		

ANTENNAS

VHF Broadband Antennas (Discone)

Preliminary evaluation tests were run on the VHF broadband antenna to determine patterns, impedance, power breakdown, and abort tower effects. No power breakdown was experienced in altitude chamber tests at altitudes as great as 225,000 feet and with power as great as 400 watts. Explicit results and recommendations will be discussed in the next reporting period.

2 KMC Omni Antenna

Preliminary patterns were taken for the 2 kmc omni antenna located on the disc of the discone antenna shown in Figure 93. The E- and H-plane patterns are shown in Figures 94 and 95. Explicit results and recommendations will be included in the next reporting period.

Recovery Antennas

Table 30 lists some of the characteristics of the recommended recovery antennas. The recommendation is based upon consideration of the following factors:

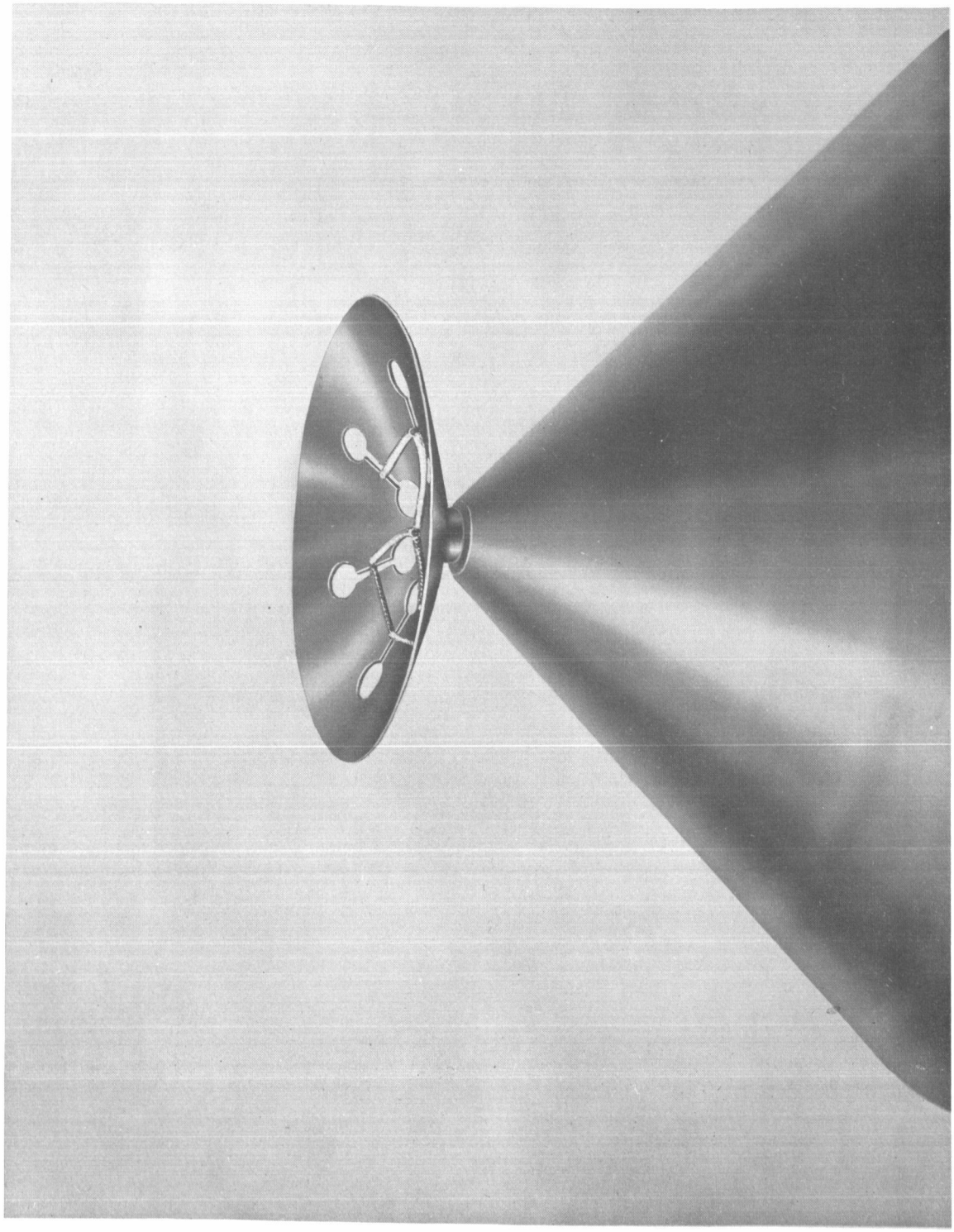

Figure 93. The 2KMC Omni Slots on the Disc of the Discone Antenna

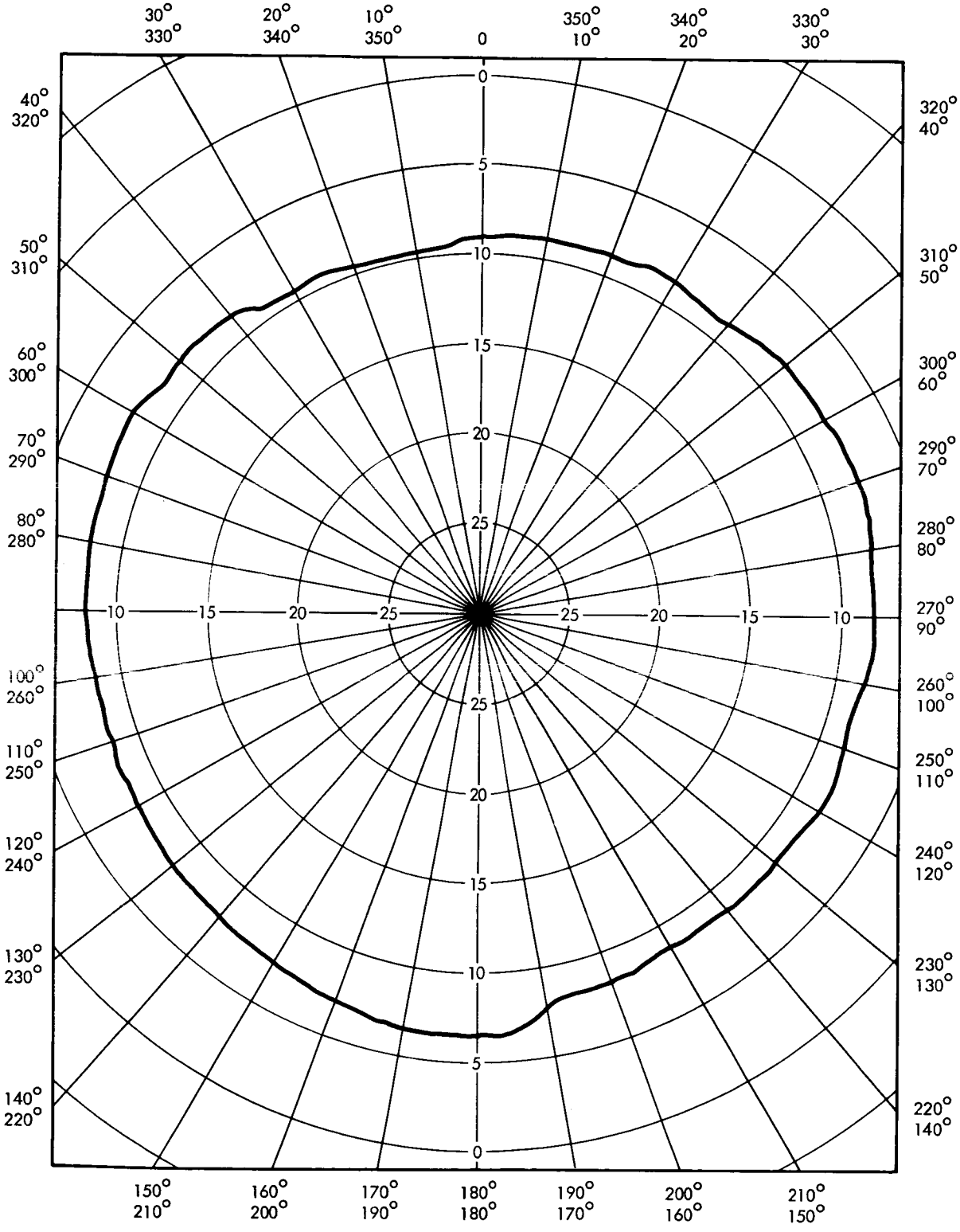

Figure 94. Radiation Pattern of DSIF Antenna: E-Plane Logarithmic Plot

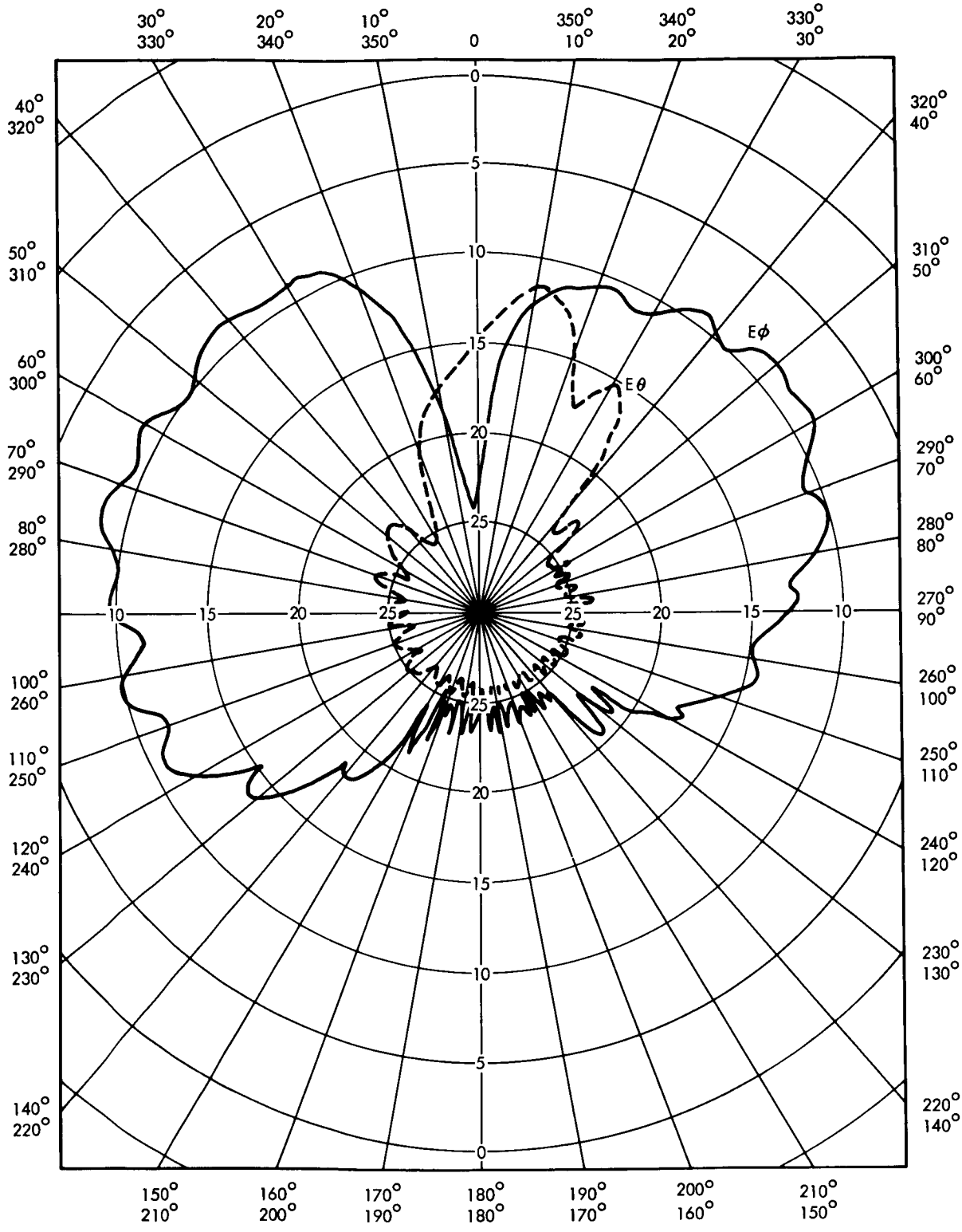

Figure 95. Radiation Pattern of DSIF Antenna: H-Plane Logarithmic Plot

Table 30. Recommended Recovery Antennas

Antenna	Z-Match Loss	Electrical Type	Polarization	Beamwidth	Omni Plane	Location	Time of Deployment	Deployment Mechanism
HF	1 to 7 db dependent upon frequency and volume available	Short monopole	Vertical	40 deg up from horizon	Y - Z	Parachute compartment	After main parachute jettison	Telescoping whip
VHF descent	Less than 1 db	N_2 dipole	Vertical	40 deg above and below Y - Z plane	Y - Z	Parachute compartment	After main parachute deployment	Telescoping whip
Back-up VHF	Less than 1 db	N_4 dipole	Vertical	40 deg up from horizon	Y - Z	Parachute compartment	After main parachute jettison	Telescoping whip

1. Although the planned spacecraft landing is on land, there is a possibility that a water landing will be made. In this event, the crew members are restricted to the spacecraft location. Antennas installed on the spacecraft are, therefore, preferred to antennas erected on the ground.

2. The spacecraft has an "upright" orientation in a water landing and will nominally be in an upright position after a terrain landing.

3. Vertical polarization is predominantly used on aircraft and ground DF antennas.

4. A VHF antenna used during descent may be damaged on landing; therefore, a backup should be provided.

R & D Antennas

Bid responses to the R & D telemetry, recovery, and R & D beacon antenna system specifications have been evaluated. Engineering recommendations for these procurements have been submitted to the Apollo materials group.

One-third scale models of the command module and abort tower structure have been fabricated for use in R & D antenna pattern tests. Figures 96 and 97 are photographs of the model before copper-flame coating.

The design of installation for communications gear (antennas, diplexers, and power dividers) has been delayed pending firm information concerning physical configurations.

Recommendations for preferred transducer strain gage and thermocouple terminations have been made to NASA. Less desirable connector methods will be utilized on early boilerplates since procurement for abort vehicle instrumentation was initiated by NASA before S&ID's recommendation.

A study was begun to establish the optimum installation design for sensors which are to be mounted on the LES.

The location of sensors (strain gages, thermocouples, pressure transducers, and accelerometers), as required by the measurement list, was defined.

CONFIDENTIAL

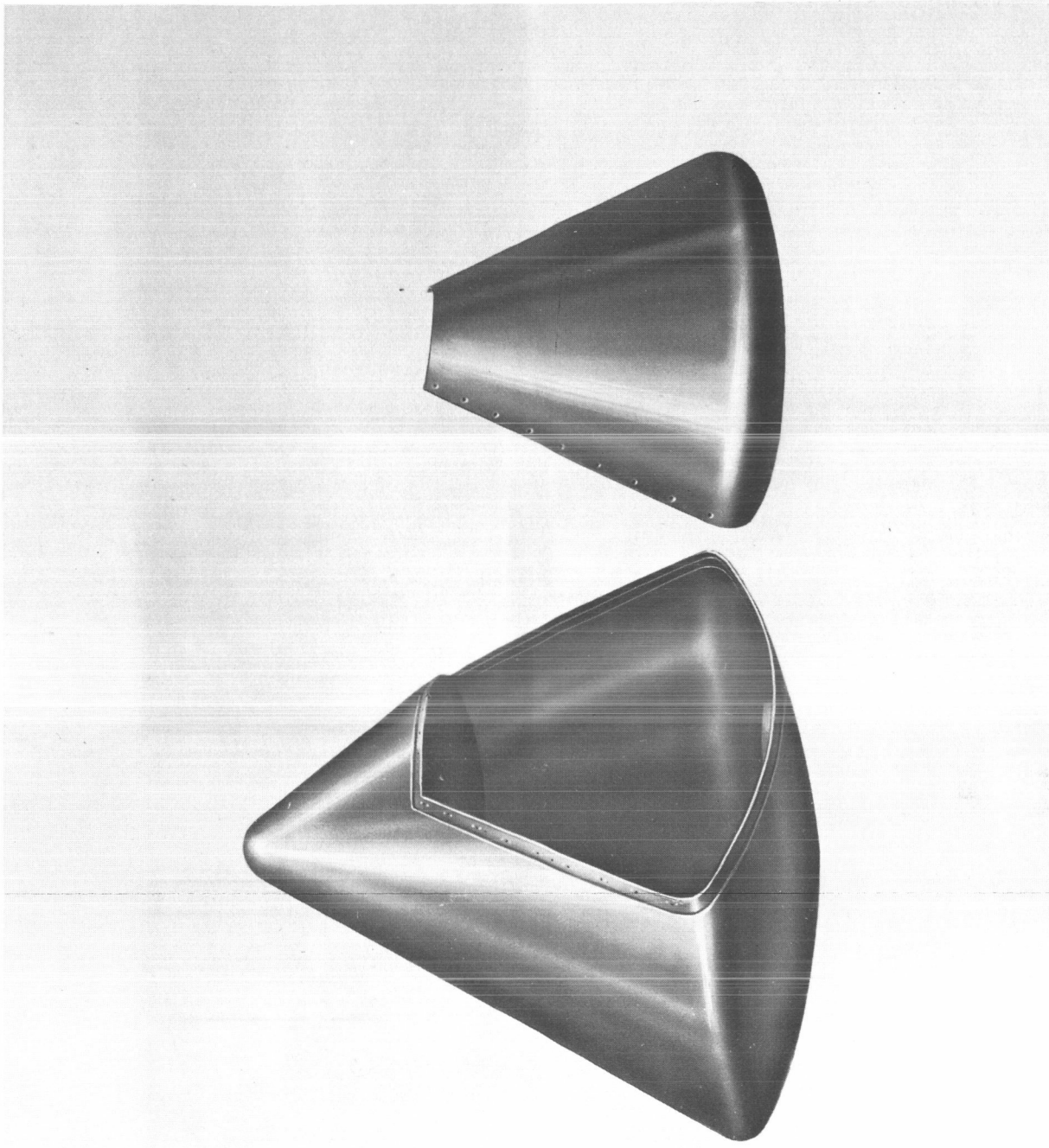

Figure 96. Command Module: 1/3-Scale Model

CONFIDENTIAL

Figure 97. Command Module and Tower: 1/3-Scale Model

The design of mounts for the attitude gyros, rate gyros, and accelerometers was completed for boilerplate 6, but must be revised because of later instrument configuration data from NASA.

An analysis of the "Q-Ball" manufacturer's specification and of other available data has shown that the "Q-Ball" will be capable of meeting attitude data requirements on boilerplate 6.

Parameter and signal conditioning requirements of the launch escape stabilization and control system have been coordinated with Minneapolis-Honeywell.

BOILERPLATE EQUIPMENT STATUS

Boilerplate 20 (Pad Abort)

The instrumentation requirements of boilerplate 6 and of boilerplate 20 are the same with the exception of camera requirements on boilerplate 20. The work completed on boilerplate 6 is applicable to boilerplate 20, subject to changes necessary to meet mission objectives.

The primary function of the cameras is to aid in the evaluation, under actual flight conditions, of the crew restraint system, in the evaluation of the couch shock-absorbing system, and in the documentation of the movement of the anthropomorphic dummies.

The entire mission, from launch through impact, will be documented. During noncritical phases the cameras will operate at a real time cine rate of 24 frames per second. High speed motion pictures (128 frames per second) will be taken to document the reactions of the dummies during the abort and impact portions of the mission.

The proposed photographic data-recording equipment consists of five 16 mm pinregistered high-speed cameras, located within the spacecraft, in positions that permit the recording of angular motion in two planes 90 degrees apart.

The films will contain qualitative and quantitative data. Analysis will reveal velocity and acceleration data. Viewing will reveal the reaction of the dummies to the restraint systems.

Boilerplate 12 and 21

Because of duplication of instrumentation requirements in many areas between the pad abort test boilerplate 6 and 20 and max Q abort boilerplate

12, 21, and 23, much of the engineering analysis and design work of boilerplate 6 and 20 will be applicable to boilerplate 12, 21, and 23.

Aerodynamic environment and acoustical environment on the max Q abort program are expected to be more severe. The decision to study fluctuating aerodynamic loads and acoustical environment in critical areas was made by NASA and S&ID. An analysis to establish the optimum measuring system is almost complete. Present information indicates that this system will consist of low-range, high-response, differential-pressure transducers. One side of each transducer senses aerodynamic pressure, the other is referenced ambient cabin pressure. Telemetry and tape recorder channel response capability is yet to be resolved.

Present planning is to have identical on-board camera coverage for boilerplate 21 and 20. The difference between the various abort vehicles is expected to increase as design becomes firm and as the test program progresses. Adjustments in the instrumentation configuration will be made as required.

Boilerplate 13, 15, 16 and 18 (Orbital Nonrecoverable Spacecraft)

Initial measurement requirements were received from the various Apollo system design organizations for boilerplate 13, 15, 16, and 18. S&ID-approved measurement requirements were submitted to NASA for consideration and approval. The total of the tentative measurements requested is approximately 140 for boilerplate 13 and 15 and 205 for boilerplate 16 and 18.

The instrumentation necessary to satisfy the measurement requirements for boilerplate 13 and 15 is expected to be supplied by NASA. On boilerplate 16 and 18, which contain partial systems, some measurements will be the same, basically, as those required for the operational spacecraft. Coordination with the system design organizations is under way to establish those measurements which are considered operational.

It is planned that S&ID-furnished operational transducers be phased into the test program as early as possible. Several operational transducers, therefore, are expected for use on boilerplate 16 and 18.

COMMAND MODULE STRUCTURE AND SUBSYSTEM INSTALLATION

OUTER STRUCTURE

The command module outer structure is brazed honeycomb sandwich panel construction fabricated from PH15-7Mo Cres material. The good elevated temperature resistance of this material provides a redundant safety factor in the reduction of the probability of any "hot spots" in the ablative material causing failure of the outer structure.

Stresskin (Elastomeric Materials)

Preliminary metallurgical analyses, radiographs, and photographs have been completed on PH15-7Mo annealed panels for the back-up honeycomb structure evaluation program.

A literature survey has shown that polyurethanes, adduct rubbers, and natural rubber are the materials most resistant to high energy radiation. These materials may be used for static and dynamic applications with negligible loss of over-all physical properties up to dosages of 4.4×10^{11} ergs/gram^{-1} (c).

The sources of radiation to be encountered by elastomers and other materials in space include cosmic (galactic) rays, Van Allen Belts, and solar flares. Information regarding the character of these radiations is limited and must be more clearly defined. The energy spectra and time behavior of the radiators must be determined.

The reaction mechanisms with elastomers and other materials must be better understood. Techniques must be developed to allow comparison between the effects of space radiation on elastomers and those of other radiation (gamma, particle, and pile) for which data already exist.

Shock Struts

In compliance with a request for data on materials and composites suitable for absorbing energy in shock struts, initial samples of various honeycomb cores filled with different foams have been submitted to environmental testing. Additional samples will be fabricated after evaluation of the results of tests on specimens received.

Lunar Landing Model Tests

A 1/6-scale model of a lunar landing vehicle is being designed for testing under conditions of lunar landing impact. Testing will be performed to evaluate landing stability characteristics. Tests will be conducted at landing impact velocities up to 15 feet per second vertically in conjunction with velocities up to 10 feet per second horizontally. The fixture for conducting these tests has been designed and is nearing completion. Design of the model is 75 percent complete, and fabrication has begun.

Aft Heat Shield

A weight comparison of various structural arrangements for the aft heat shield is shown in Figure 98. These arrangements show the various techniques investigated for reacting the boost and abort loads for weight comparison purpose. For all flight loads, the aft heat shield is treated as either a shallow shell with the center portion acting in hoop tension and with a compression ring around the periphery stabilizing the dish, or as a flat plate in bending supported at the periphery. The critical design condition occurs during a max q abort where the heat shield is supported as shown in the illustration. During reentry, the heat shield is supported in compression around the entire periphery of the base of the cabin wall. During landing impact, the loads are registered only at a hard point of each of the six vertical struts. The remainder of the heat shield is assumed to carry only those loads necessary to stabilize the inboard shock struts.

The results of a weight trade-off study comparing the cabin floor (analyzed as a shallow shell) to that of the original design (with four floor beams) is shown in Figure 99. The center portion of the floor acts in hoop tension and is stabilized by a compression ring around the periphery. The discontinuity stresses on the floor-sidewall intersection have been taken into account for a symmetrical loading condition.

Crew Couches for Boilerplate Vehicles

The final group of crew couch drawings for boilerplate test vehicles 1 and 2 was released on 22 May 1962.

The design of these couches follows standard aircraft quality fabrication techniques and practices. This approach was taken to produce components that can meet the high-strength and low-weight requirements necessary to obtain accurate test data.

The couch sizes are to accommodate 90th percentile fully instrumented anthropomorphic dummies. Angular and linear head and leg adjustments are not provided on these first couches. Arm rests and hand grips are provided

* WEIGHTS GIVEN ARE FOR COMPARISON ONLY AND EXCLUDE BRAZE MATERIAL, SHOULDER CORRUGATION, THRUST BEARING RING , THRUST PADS, AND SHOCK STRUT ATTACHMENT FITTINGS.

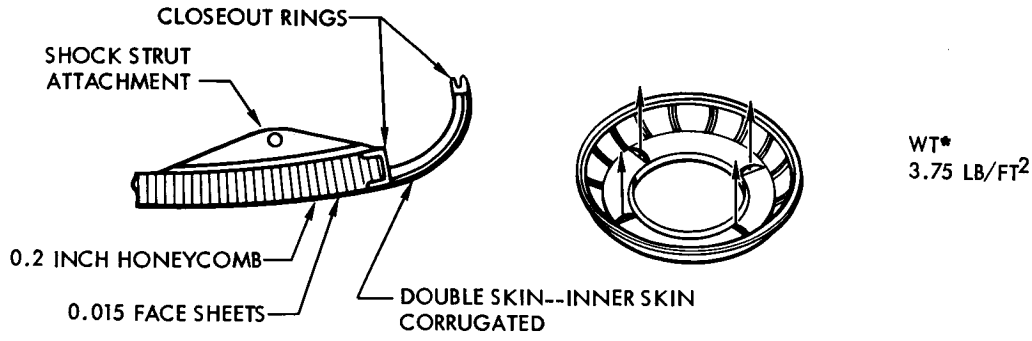

SHALLOW SPHERICAL SHELL SUPPORTED BY FOUR SHOCK STRUTS

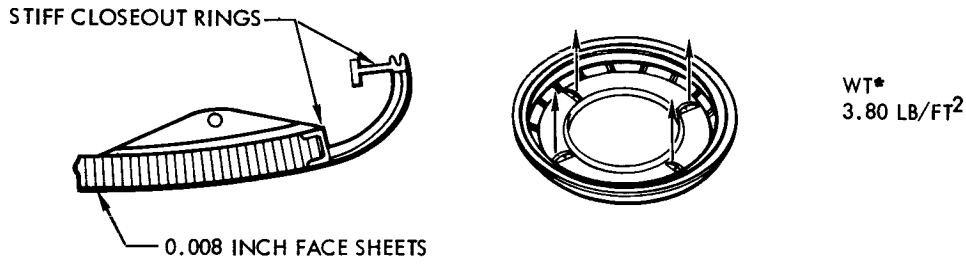

SHALLOW SPHERICAL SHELL SUPPORTED BY MARMAN CLAMP

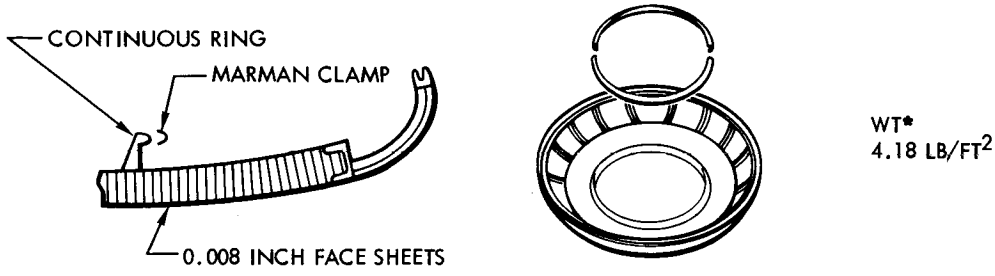

SHALLOW SPHERICAL SHELL SUPPORTED BY EXPLOSIVE BOLTS

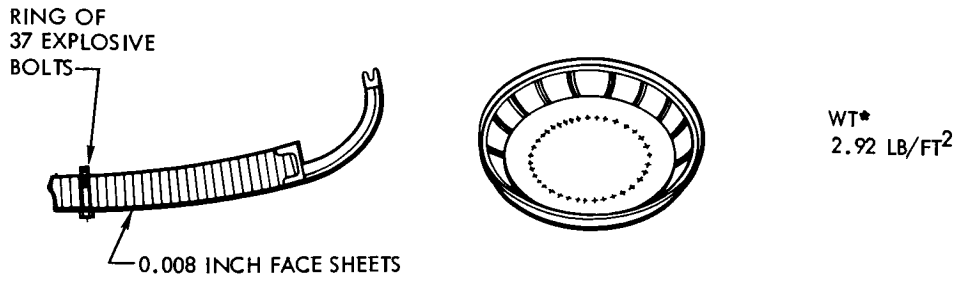

Figure 98. Aft Heat Shield Weight Comparison

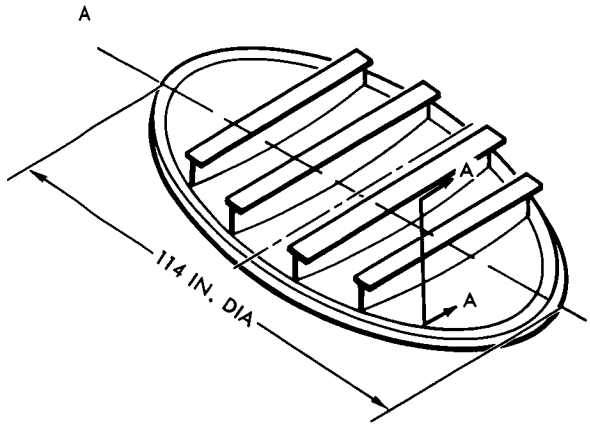

DESCRIPTION	WT [LB/F]
FLOOR BEAMS, WITH HONEYCOMB FLOOR CONSIDERED AS FLAT PLATES BETWEEN BEAMS	2.73

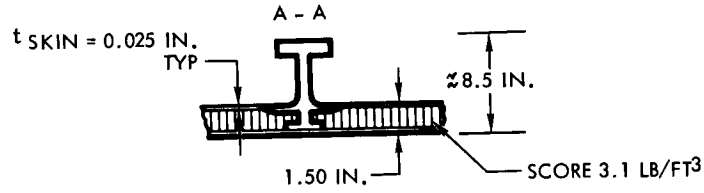

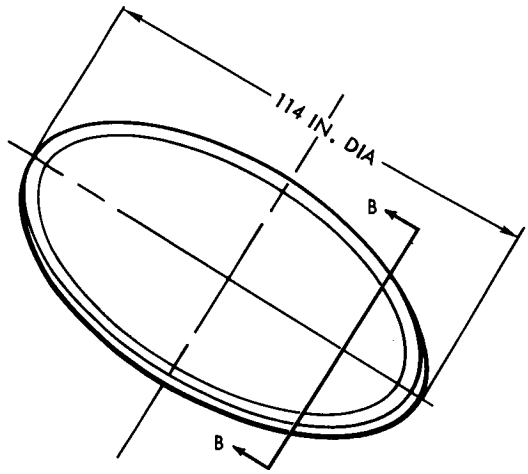

DESCRIPTION	WT [LB/F]
HONEYCOMB FLOOR, CONSIDERED AS SHALLOW SPHERICAL SHELL UTILIZING EXISTING EDGE MEMBER AS COMPRESSION RING	2.02

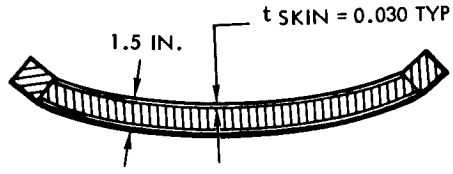

NOTE:
WEIGHTS ARE FOR COMPARISON ONLY AND DO NOT INCLUDE FITTINGS, ETC.

Figure 99. Inner Cabin Floor

for proper arm support of the dummies. The foot rests are fixed and have no angular pedal movement.

The upper and lower couch attach fittings are being redesigned for the next drawing release to manufacturing. The prime objective for this updating is to provide quick disconnect couch fittings for installation and removal during the test program.

The boilerplates for the next released crew couch drawings are 8, 20, 21, and 23. Boilerplate 8 will require couches with angular actuation and adjustments for water egress and flotation tests.

Flight Vehicle Crew Couches

Design work is proceeding on the crew couch concept where the back support, seat pan, and leg support are coupled for angular adjustment. These components are attached to each other by hinges and are supported at pivot points so that angular adjustments are obtained in a coordinated relationship. The main advantage of this concept is simplification of the adjustment mechanism and positioning controls.

An additional requirement being studied at this time is the repositioning of the center couch so that the pilot may use the main hatch as an observation window during lunar landing. This will add new design and clearance problems, but preliminary work indicates that repositioning the couch is feasible.

The attitude and stabilization control system handles for the left-hand crew station are no longer supported from the couch structure. Handles will be mounted from the face of the instrument panel.

On the center couch, the control handles are to be the small plug-in console type. When the center couch is removed or stowed, the handles will be clipped to brackets mounted on the instrument panel forward of the center position. Coiled electrical leads will connect the control handles to the control system through the brackets on the panel.

As the design of the basic couch progresses, effort is to be directed to getting the most efficient crew couch design. The space occupied by the three couches justifies constant review of each component detail part and assembly.

CREW ACCESS HATCH

Design effort during the second quarter was concentrated on the concept of an inward opening crew access door situated within a larger emergency

[redacted]

panel. The available escape time of 57 seconds for a main parachute failure during normal reentry and 17 seconds for the same failure during pad abort requires an outward opening emergency hatch large enough for simultaneous egress of three men.

To avoid the weight penalty inherent in the numerous mechanical latches that would be required to react cabin pressure loads and to assure sealing under deflections, the emergency panel is made integral and separable by a linear-shaped explosive charge. Reliability and personnel safety will be demonstrated by an extensive research program involving firing of test structures in sizes to full-scale escape doors and surrounding structure.

The normal crew access door is located within the emergency panel and opens inward to utilize cabin air pressure for sealing and to reduce latch loads. By designing the door as a truncated wedge, it may be placed above the closed final position from within and pulled down by a manual screw and gearbox until the top and sides engage a keyed sealable jamb. Locking is then effected across the lower sill by a series of shear bolts.

This design was considered firm for the spacecraft until NASA initiated inquiries into other escape hatch configurations. Work will continue on the existing design, and a test program will explore the reliability and degree of safety of the linear-shaped charge concept. Meanwhile, an outward opening mechanical panel will be studied using various systems, explosive, gas, or other means, to assure instantaneous jettisoning.

It is recognized that parallel designs cannot be completed through hardware and test stages without slipping the command module structure release schedule. Theoretical and test data pertaining to both design concepts will be compiled as soon as possible. These will form the basis for a comparison of weight, reliability, safety, and crew escape potential.

AIR LOCK AND DOCKING

System A

The air lock shroud is actuated to open position as the command module is navigated close to its target, such as another command module. The outer air lock remains closed. Contact is made by mechanical arms, a fixed aligning ring, or other device; and the two vessels are drawn together until the two sealing faces meet and clamps are actuated to seal the joint. The air lock hatches may then be opened inward in each lock for capsule intercommunication.

This method protects the astronauts from exposure to space, but they have the disadvantage of attempting to effect mating closure from the crew

space with no visual aid other than a view port in the inner hatch caisson. No space provision has been made in the Apollo command module for installation and deployment of mechanical grappling devices, and it seems impractical to contemplate a closure precise enough to permit clamping up by remote control from the crew space as shown in Figure 100.

System B

In this system, a space-suited crewman stands in the open airlock to effect the last few feet of closure and the docking operation. A section through outer hatch and shroud is shown in Figure 101. After entering the air lock, the crewman vents pressure then releases the outer hatch clamps. He next lifts the hatch to clear indexing pins and rotates the hatch 45 degrees. This locks the hatch to radome while unlatching radome from parachute shroud. This mechanically guarantees that the radome is locked to the shroud and free of the structure at all times, except when air lock is in use thereby ensuring parachute system reliability.

The hatch-radome assembly is then manually rotated to open position and remains attached to the capsule by a simple hinge link. The astronaut, exposed to space, is in position to guide the vehicles visually to within the air lock. He completes the docking by manually drawing the outer command module to the closure point and rotating the clamping ring to close the hatch clamps.

The normal system "B" docking operation assumes the presence of a crewman in each air lock, but could be performed as a rescue mission by using the rescuer to open the opposite radome from the space side. Entry plugs at the shroud latches would permit removing the radome and gaining access to the hatch clamps from the parachute compartment.

Rescue entry into a command module with an incapacitated crew would require a pressure gage in the outer hatch cover, and an air valve for venting pressure in the air lock. A pressure gage in the inner air lock hatch would also be necessary to show the condition of the crew space before entry could be attempted.

A docking system using visual control by a crewman in the open hatch and eliminating remote control devices is lighter in weight and more reliable. The disadvantages are in such areas as hazards of exposure to space and physical demands and dangers inherent in manhandling two weightless masses into alignment exact enough to effect a hermetic seal. Data on the space environment are anticipated from the general space program, and a two-dimensional study will be made to determine the feasibility of overcoming command module mass inertia by physical effort.

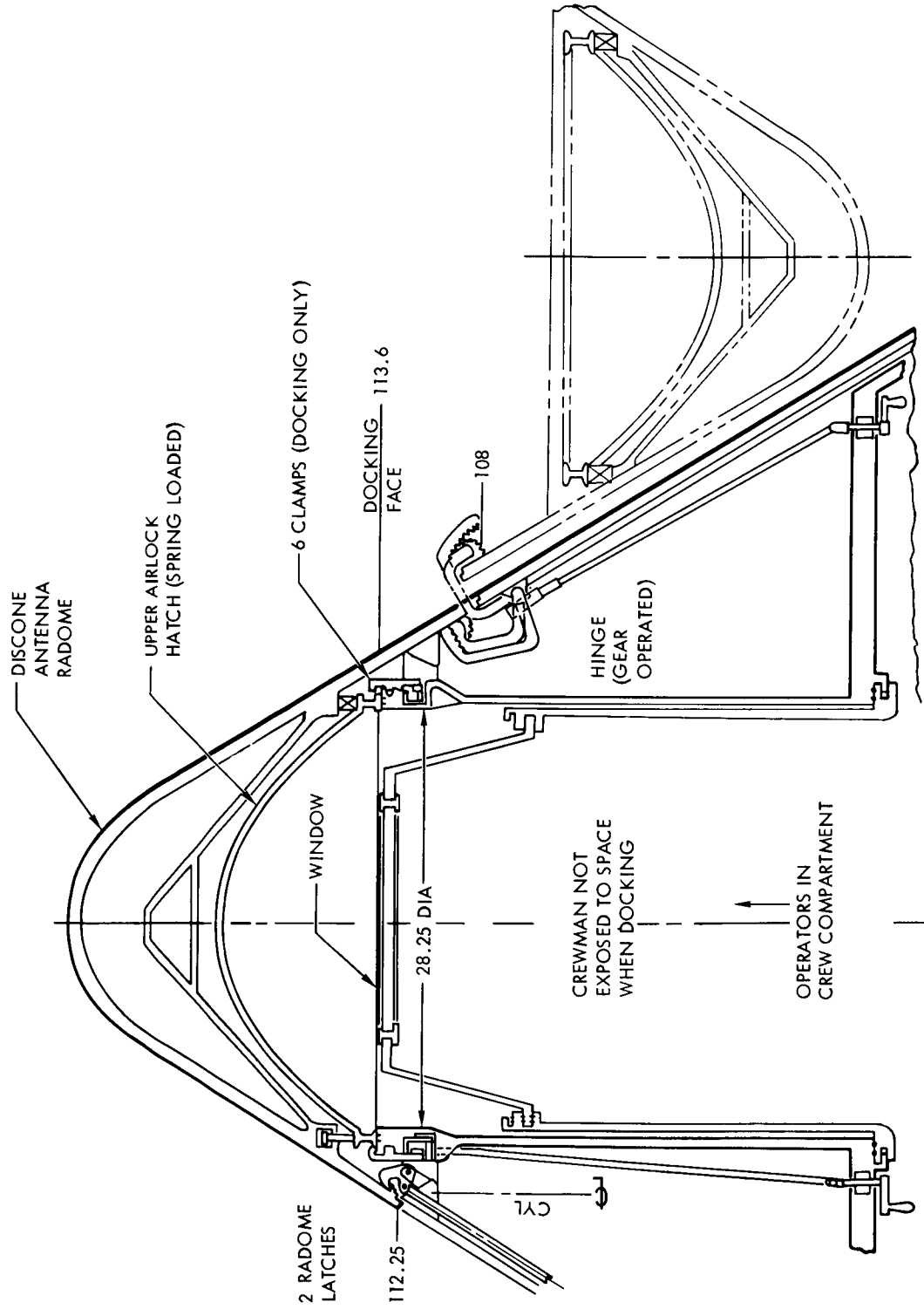

Figure 100. Docking System A

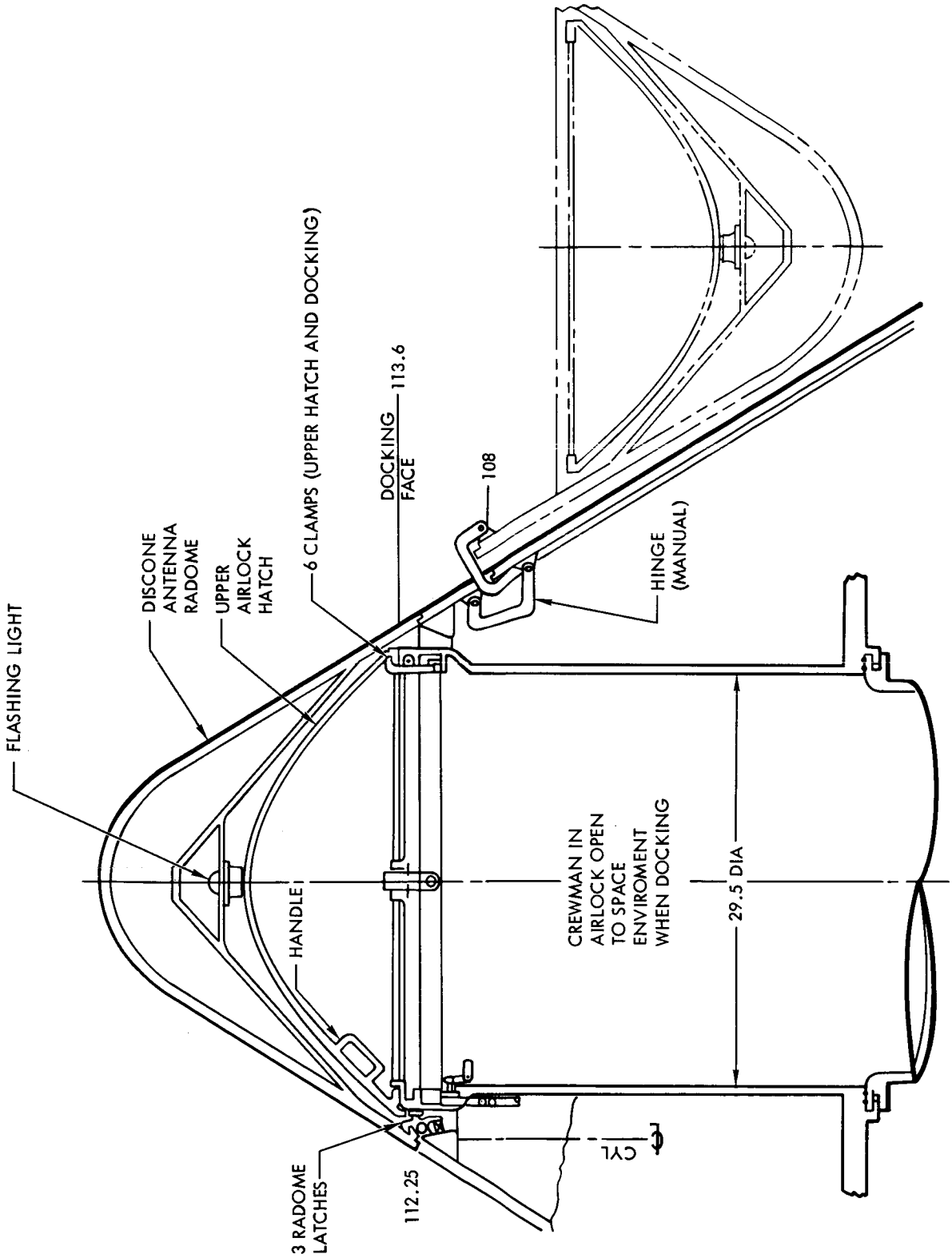

Figure 101. Docking System B

In the next period these docking proposals and others under study will be submitted for evaluation. Detailed layout of the air lock hardware will begin when selection of the optimum spacecraft system is made.

Impact Attenuation Systems - Crew Couch and Command Module

A crew couch attenuation system was released in May for boilerplate 1 and 2. (See Figure 102.) General arrangement of struts is as described in the report for the first quarter, but the shock attenuating medium was changed from water to crushable aluminum honeycomb in the X-X and Z-Z struts. It remains crushable honeycomb in the Y-Y struts. (See Figure 103.)

The aft heat shield shock attenuation system has been released for boilerplate 1, 3, and 19. It consists of six vertical air-oil struts attaching to the capsule inner wall structure and heat shield. Horizontal attenuation and stability is provided by four pairs of crushable honeycomb struts. (See Figure 104.)

The aft heat shield is held in stowed position against the command module by latching the retracted vertical strut barrels to the inner wall of the module.

Latches are provided at four of the six vertical struts. A system of four rigged cables leads from the hook toggles to a dual guillotine-type cable cutter with explosive actuation.

Hook geometry is such that gravity load of the aft heat shield provides an opening moment on the hook when the toggles are unloaded by cutting the cables. Additional g's are provided by the capsule deceleration under parachute deployment, which is time sequenced with the aft heat shield release.

All details for boilerplate 3 and 19 were released in May.

Changes in impact attenuation shock strut kinematics and changes to the inner capsule wall mold line caused revision of the uplatch design of boilerplates subsequent to boilerplate 3 and 19. The operating principle remains the same, but the uplatch has been relocated to the outboard side of the cylinders due to space limitations. This design is being detailed.

Kinematics changes also caused redesign of the shock struts on boilerplates subsequent to 1, 3, and 19. Release on these was nearly complete at the end of this period.

PARAMETERS TO BE VERIFIED BY IMPACT TEST
- SYSTEMS FUNCTIONAL CHARACTERISTICS } DEPENDENT ON LANDING DYNAMICS
- COMPONENT OPERATIONAL CHARACTERISTICS } INDEPENDENT OF SHOCK STRUT TYPE
- LOAD DISTRIBUTION

CONFIGURATION ADAPTABLE TO OTHER TYPES OF SHOCK STRUTS

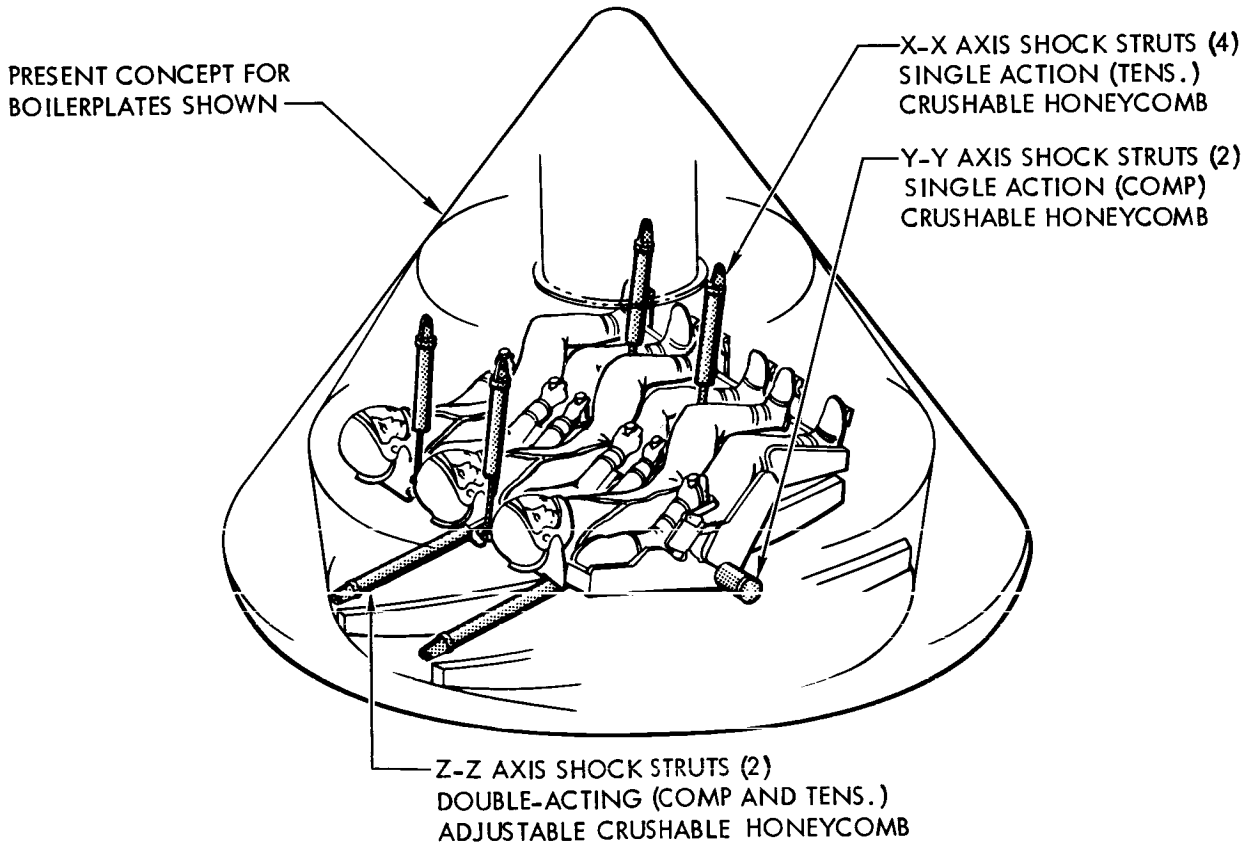

Figure 102. Crew System Impact Attenuation

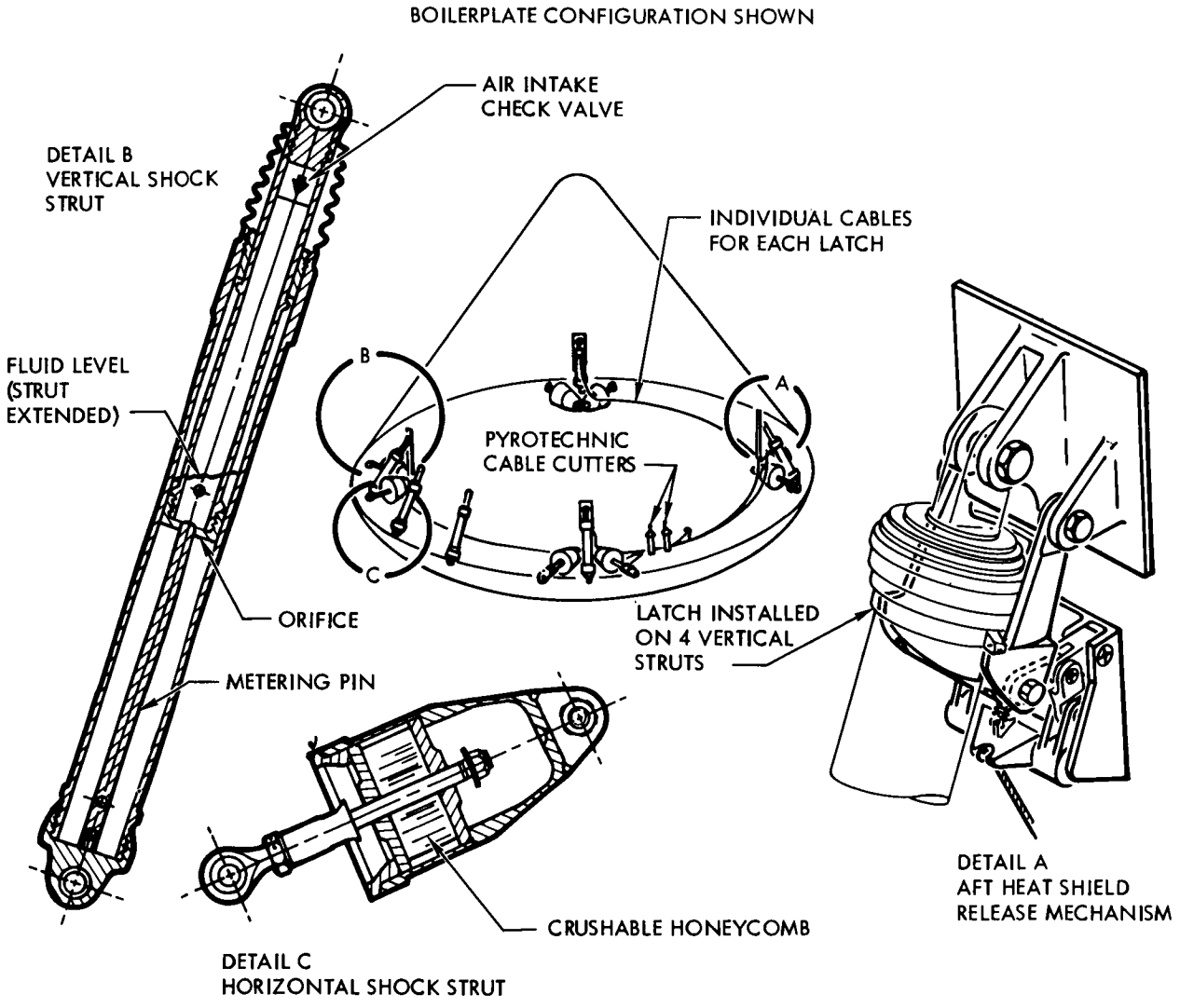

Figure 103. Airframe System Impact Attenuation

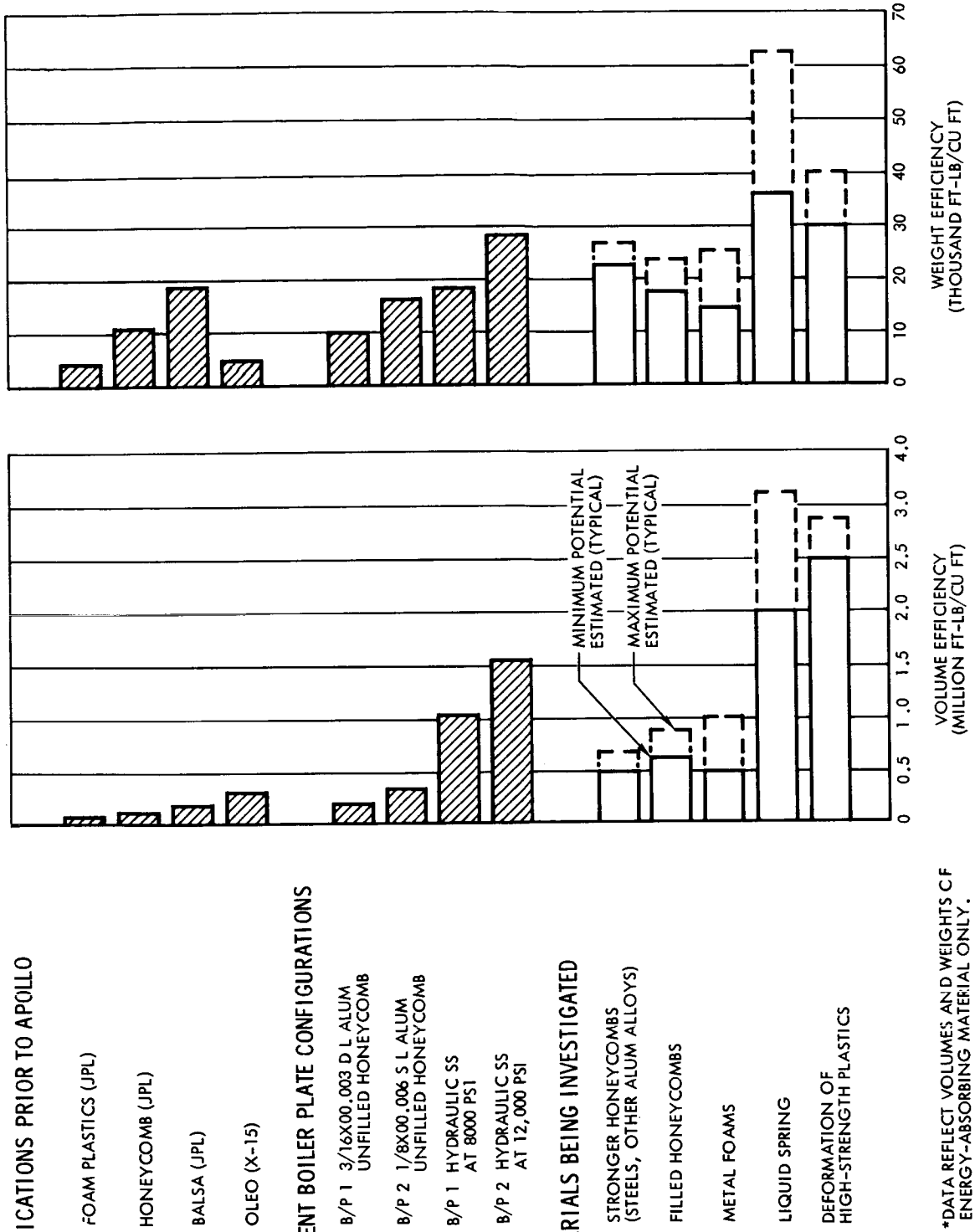

Figure 104. Strut System Materials—Development Program

MOCK-UPS

Command Module

The command module for handling and transportation mock-up 9 (Figure 105) is in the final stages of structural fabrication. The escape tower and the service module attach points with the release mechanisms are being installed. The command module for handling and transportation, mock-up 11, is in the final stages of structural fabrication.

Adapter

Mock-up 4, partial service module and partial adapter, is on schedule. The completed unit was reviewed by engineering on 18 June. Suggested changes by engineering and the latest design changes are being incorporated.

The adapter for handling and transportation (spacecraft 9) has been completed on schedule. Design changes may cause revisions of this unit.

Launch Escape System

The basic structural launch escape tower for handling and transportation (unit 9) is presently in fabrication.

Design effort for the jettison motors, deflection skirt, and nose cone is on schedule.

Mock-up 7 is shown in Figure 106.

Mock-up 4 is shown in Figure 107.

Mock-up 9 is shown in Figures 108 and 109.

Adapter mock-up 9 is shown in Figure 110.

Adapter mock-up 4 is shown in Figure 111.

CONFIDENTIAL

7005-04-46 "O"

Figure 105. Command Module Mock-Up 9 (Sheet 1 of 4)

CONFIDENTIAL

CONFIDENTIAL

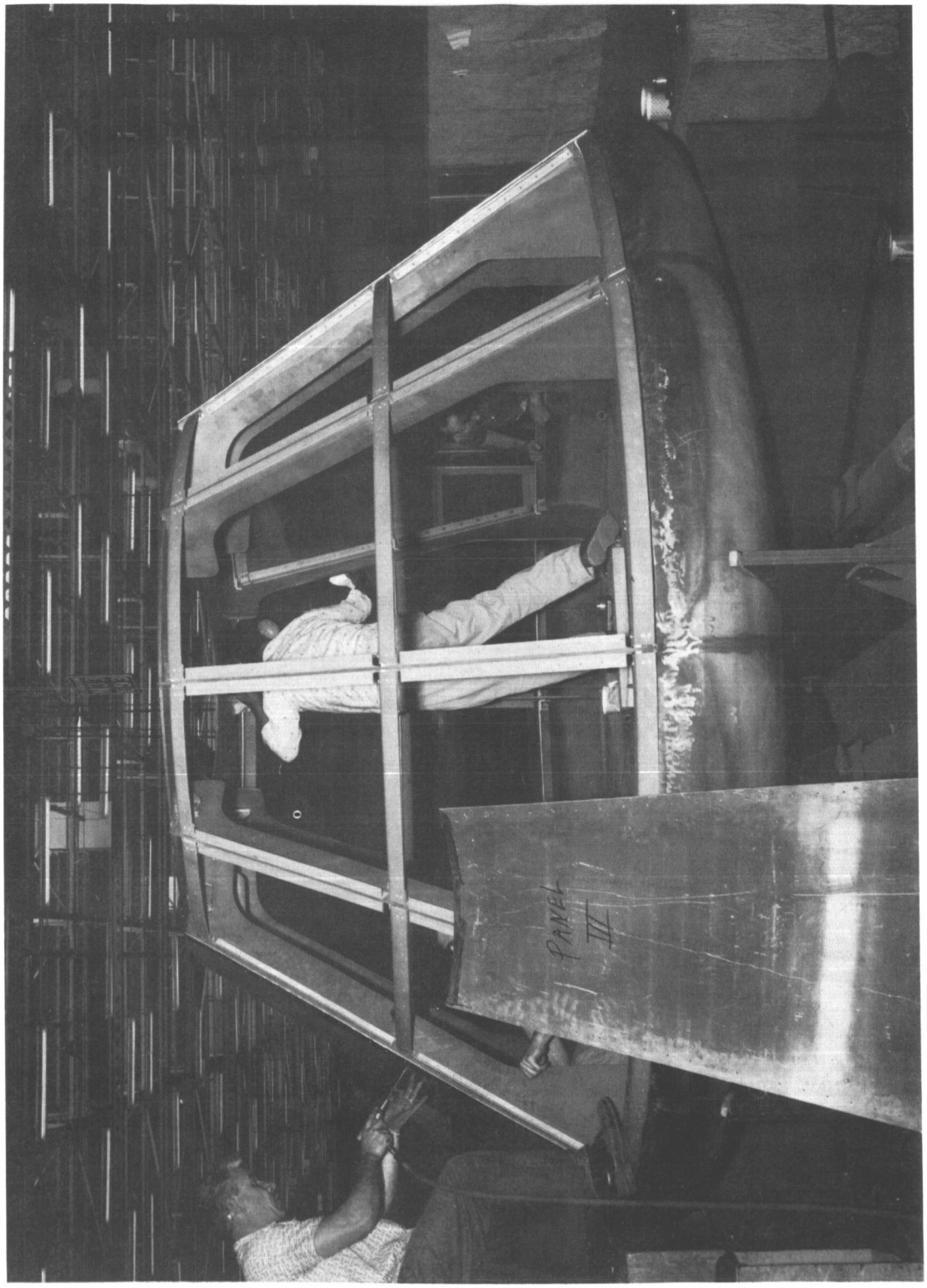

7005-04-51 H

Figure 105. Command Module Mock-Up 9 (Sheet 2 of 4)

CONFIDENTIAL

CONFIDENTIAL

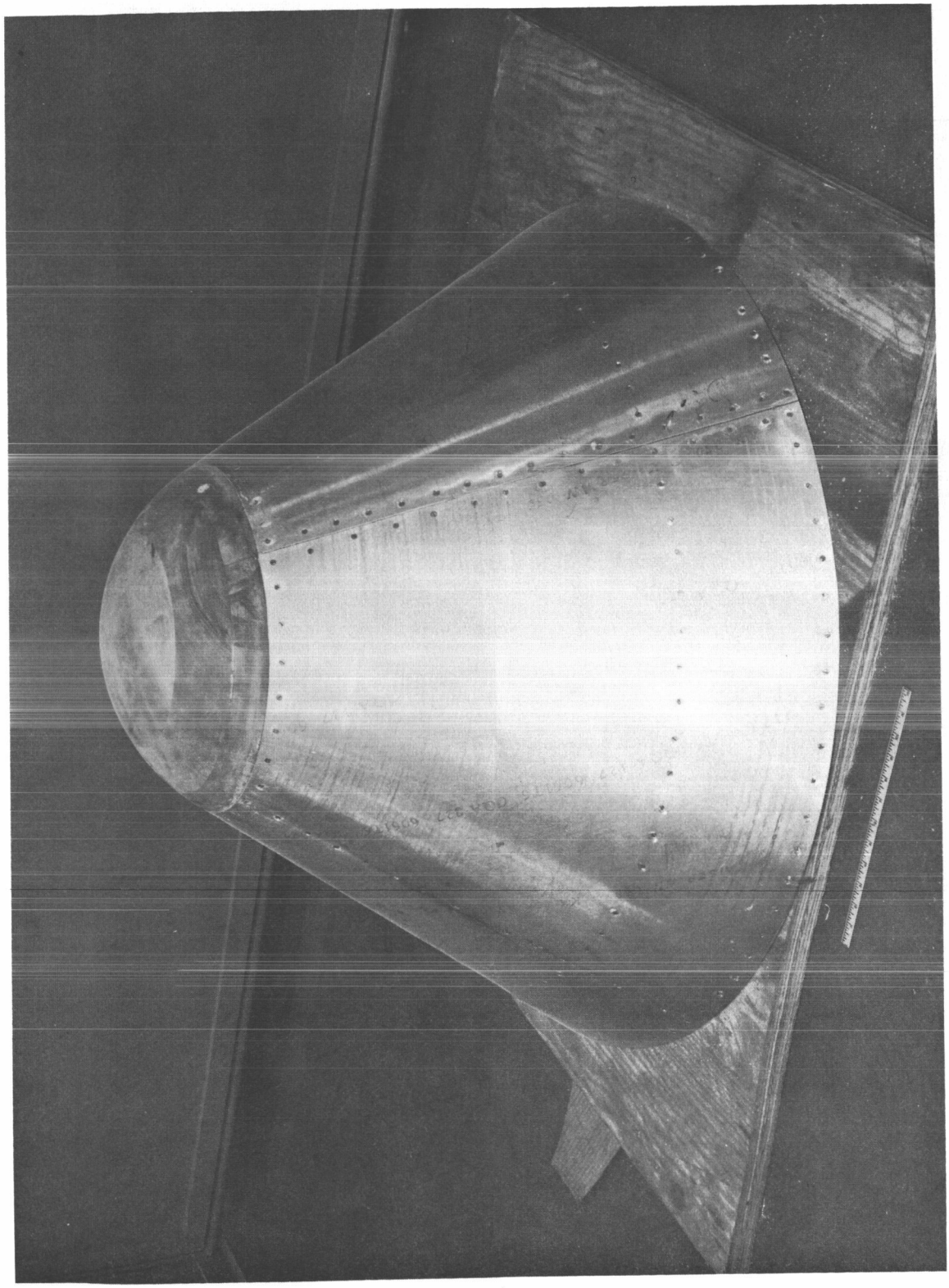

7005-55-1F

Figure 105. Command Module Mock-Up 9 (Sheet 3 of 4)

CONFIDENTIAL

CONFIDENTIAL

7005-55-1C

Figure 105. Command Module Mock-Up 9 (Sheet 4 of 4)

CONFIDENTIAL

CONFIDENTIAL

7005-04-53 B

Figure 106. Mock-Up 7 (Sheet 1 of 3)

CONFIDENTIAL

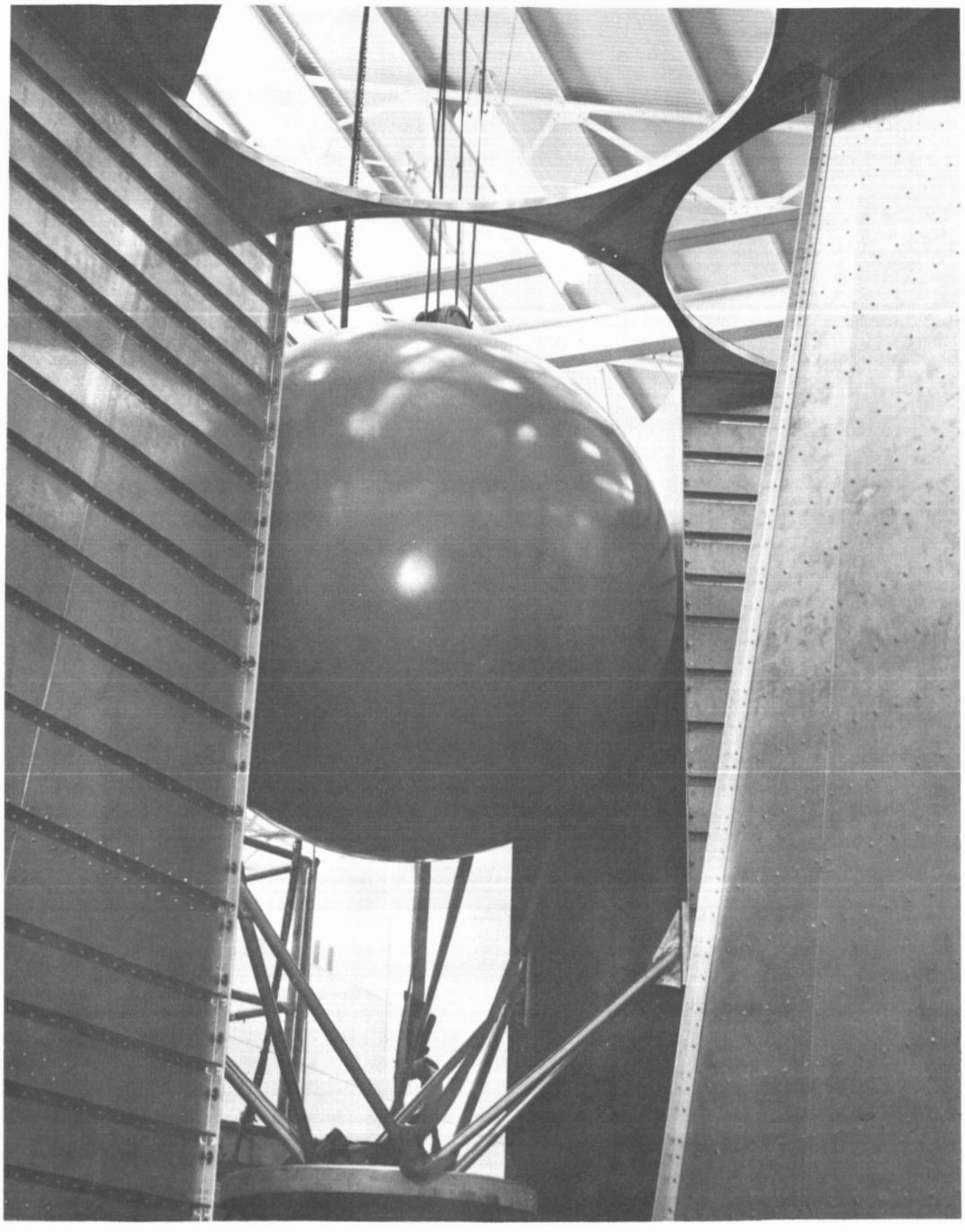

7005-04-64 A

Figure 106. Mock-Up 7 (Sheet 2 of 3)

CONFIDENTIAL

CONFIDENTIAL

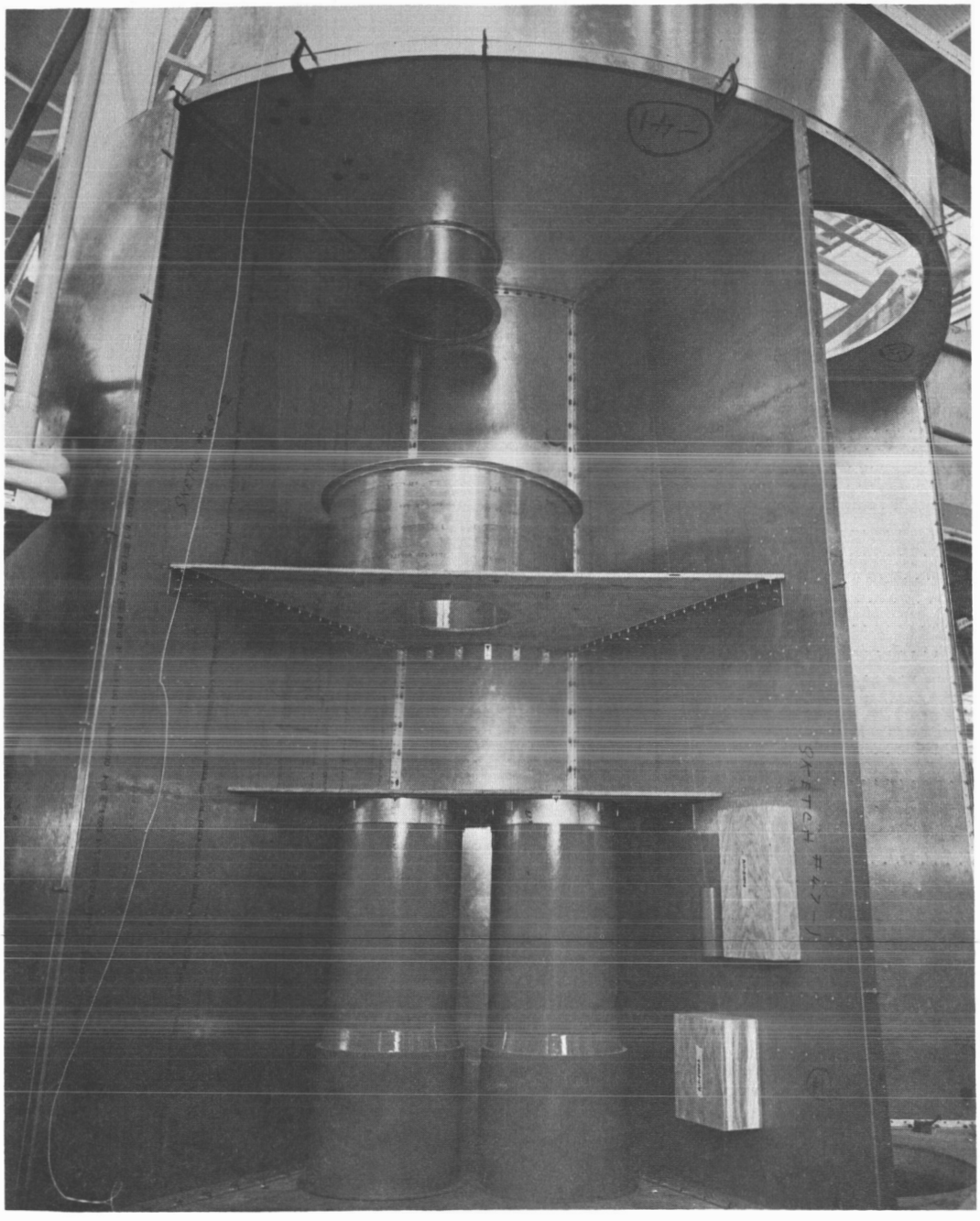

7005-04-64 C

Figure 106. Mock-Up 7 (Sheet 3 of 3)

CONFIDENTIAL

CONFIDENTIAL

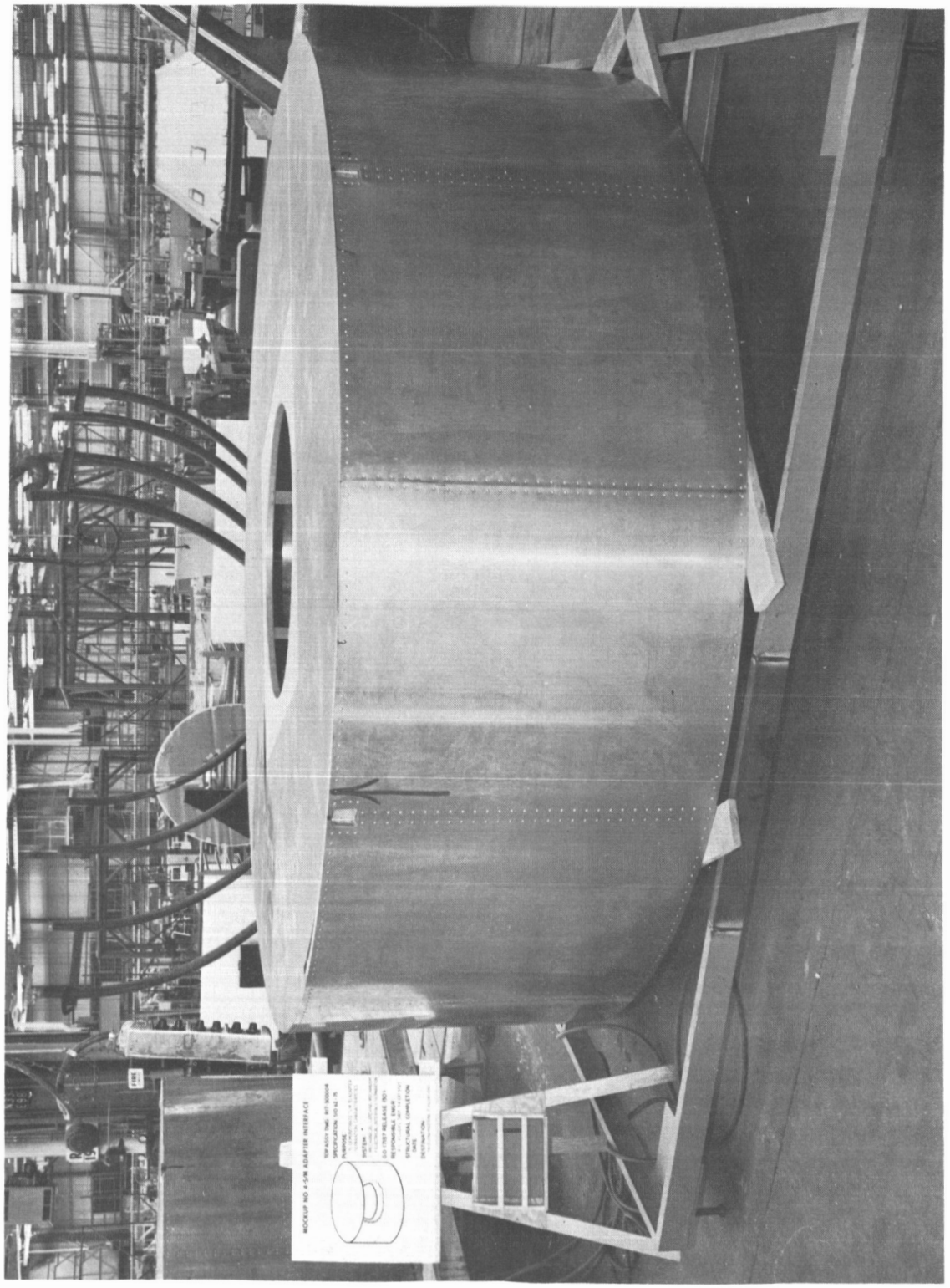

7005-04-46 N

Figure 107. Service Module Mock-Up 4 (Sheet 1 of 2)

CONFIDENTIAL

CONFIDENTIAL

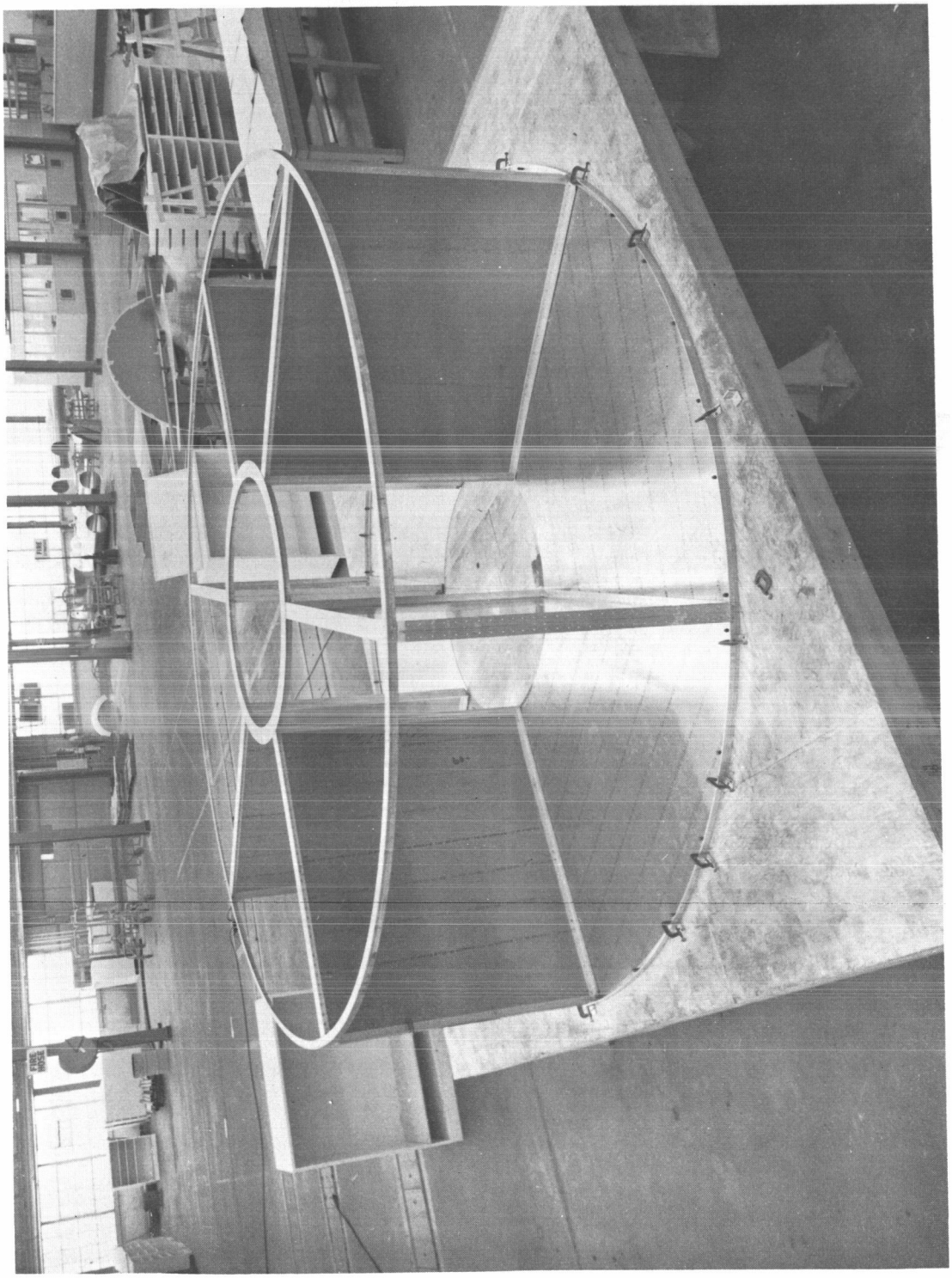

7005-86-15 E

Figure 107. Service Module Mock-Up 4 (Sheet 2 of 2)

CONFIDENTIAL

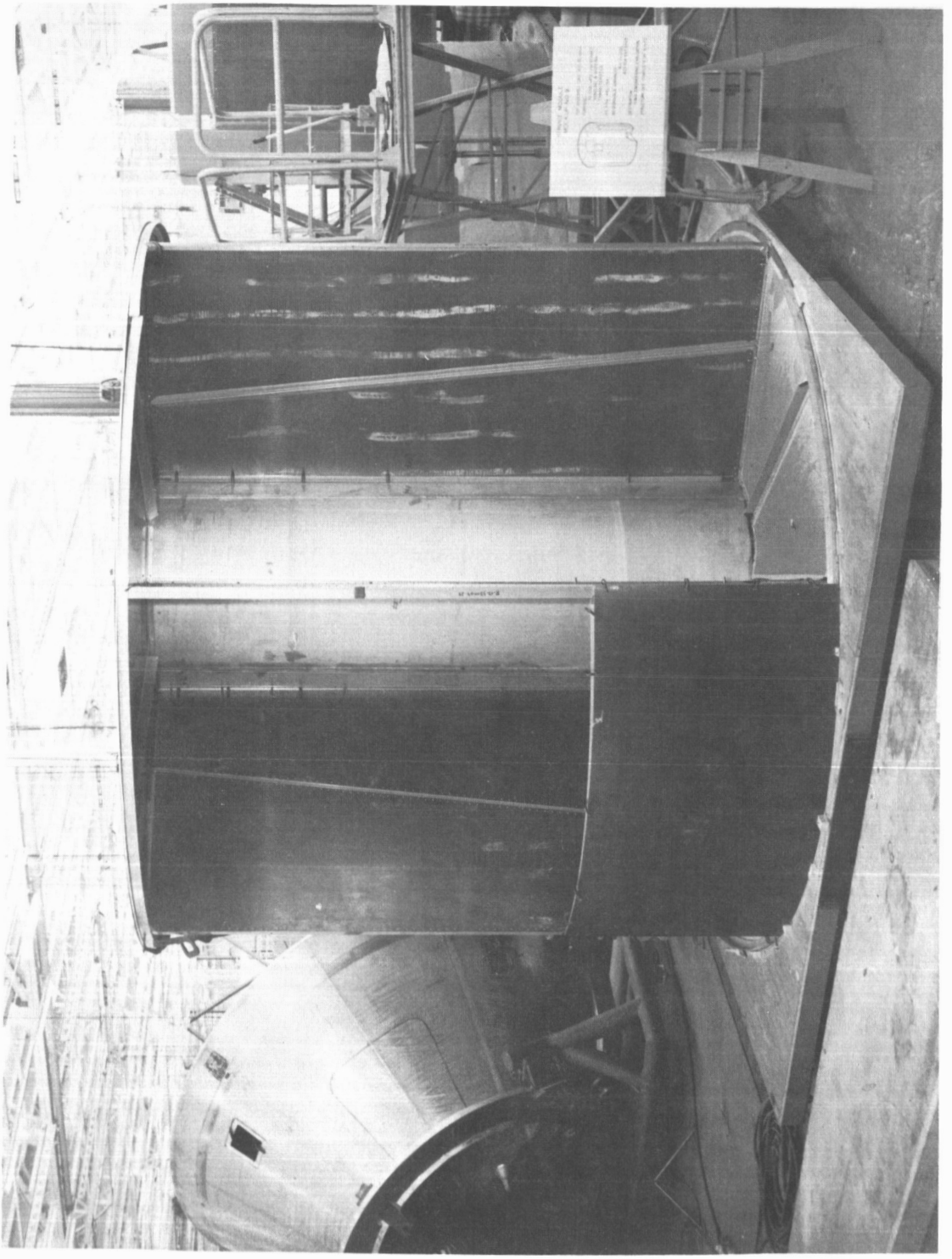

7005-04-68 G

Figure 108. Service Module Mock-Up 9

CONFIDENTIAL

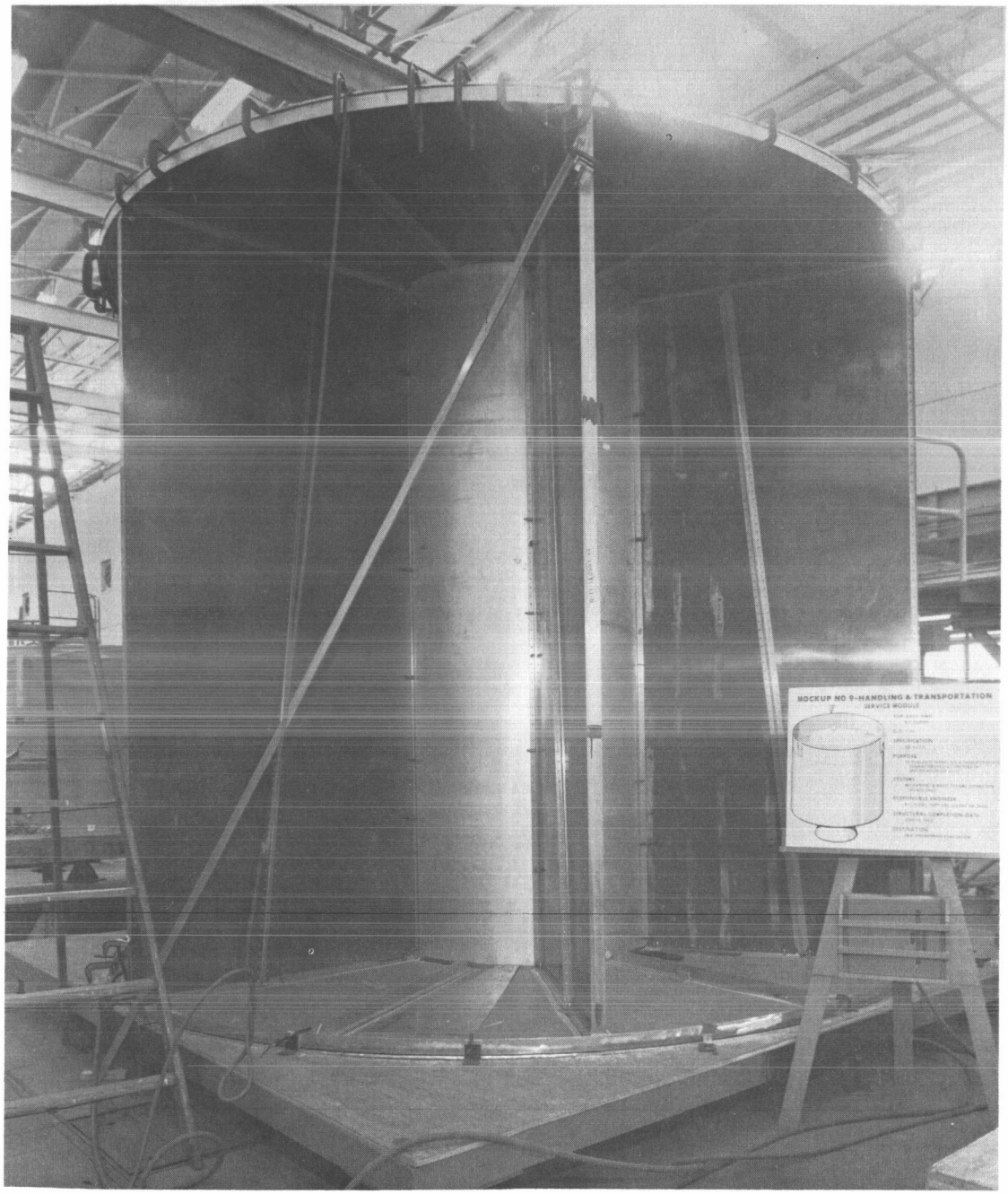

7005-55-ID

Figure 109. Handling and Transportation Mock-Up 9

CONFIDENTIAL

CONFIDENTIAL

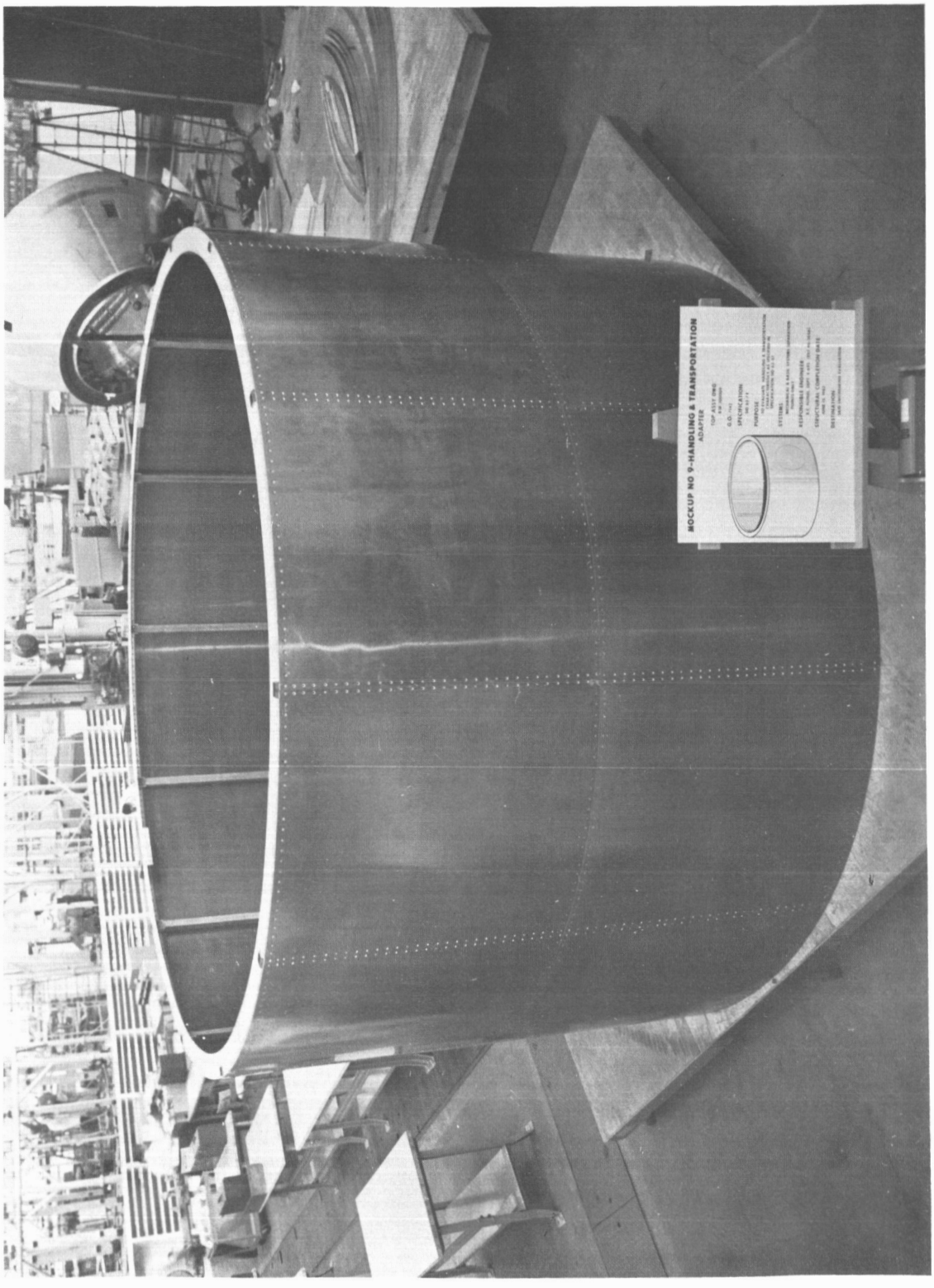

7005-55-1B

Figure 110. Adapter Mock-Up 9

CONFIDENTIAL

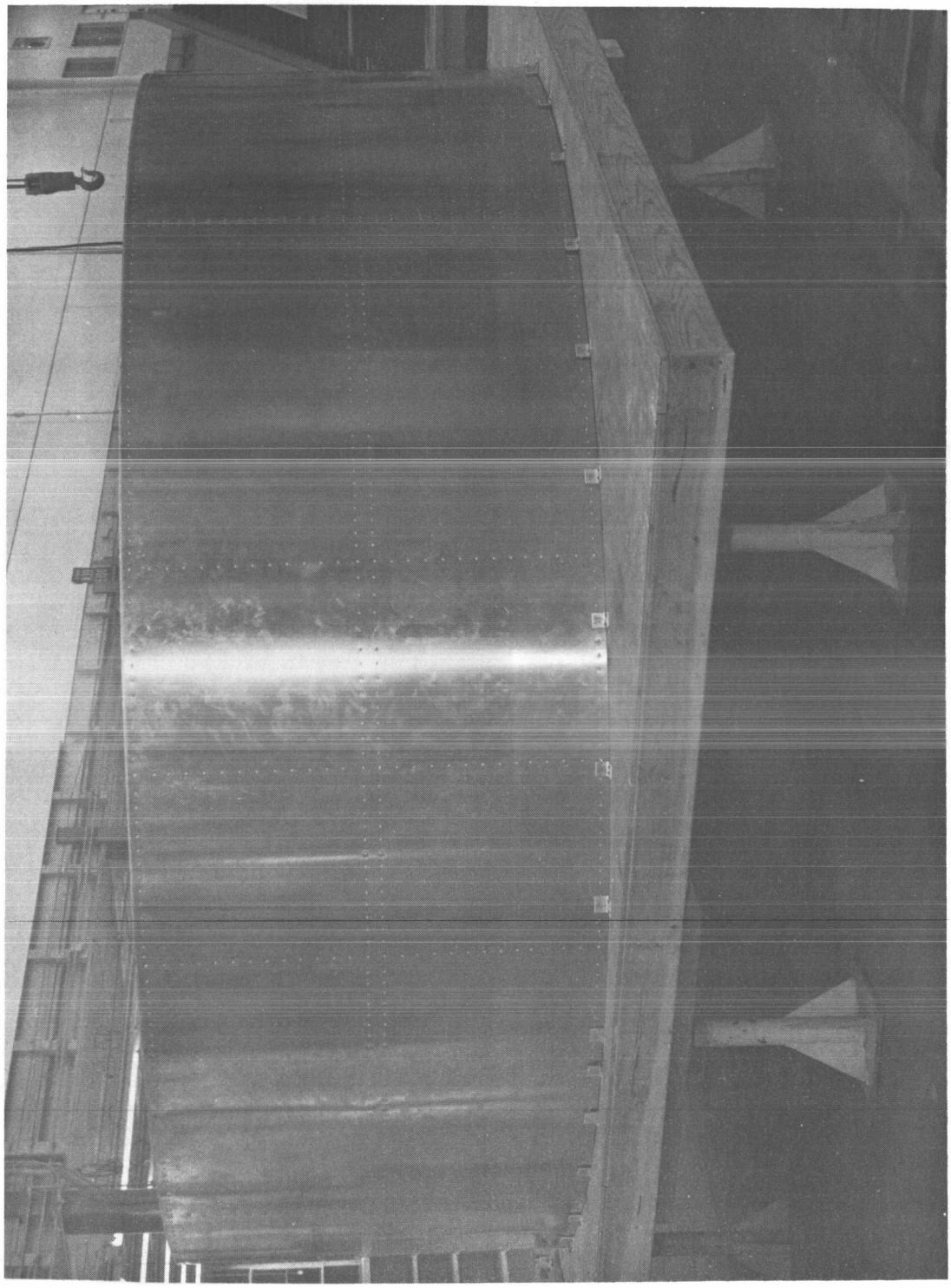

7005-04-43 A

Figure 111. Partial Adapter Mock-Up 4 (Sheet 1 of 2)

CONFIDENTIAL

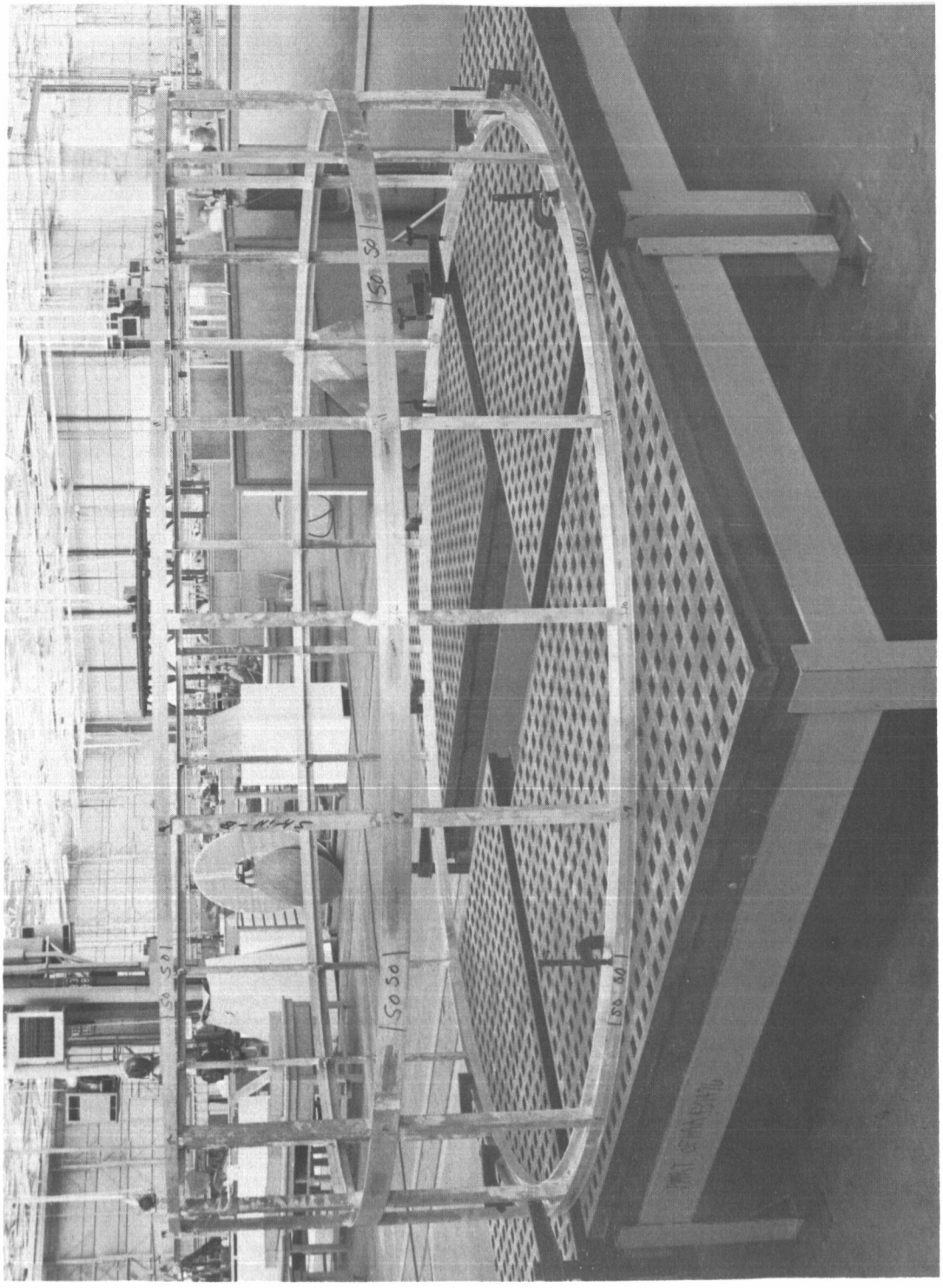

7005-86-15 D

Figure 111. Partial Adapter Mock-Up 4 (Sheet 2 of 2)

CONFIDENTIAL

SERVICE PROPULSION SYSTEM

PROPELLANT SYSTEM

Pressurization Subsystem

The pressurization system, as shown in Figure 112, consists of helium storage tankage with temperature and pressure instrumentation and a fill receptacle. A crew-operated solenoid shutoff valve is provided upstream of each pressure regulating system to protect against tank overpressurization and loss of pressurant due to internal leakage during coast periods. Series-parallel pressure regulators and check valves are provided to protect against failures in either open or closed modes. The propellant tanks are equipped with a pressure relief valve which also protects the system from over pressurization. A burst disc protects the relief valve seat from contact with the propellants and reduces overboard leakage potential.

Preliminary system pressures, compatible with the engine requirements, have been assigned.

Tank Configuration and Distribution Subsystem

A decision was made to proceed with design using a multiple tank configuration with a simplified, series feed and transfer system. This arrangement of tankage with center-of-gravity excursion is shown in Figure 113. A program redirection, however, required an increase in propellant quantity. A number of revised tankage configurations were studied to determine the optimum arrangement. One configuration to gain the required volume increase was based on lengthening the tanks while retaining the previously established tank diameter. This configuration resulted in a service module length increase with its corresponding weight increase. Another configuration revised the diameters of the tanks making the oxidizer tanks larger in diameter while the fuel tanks decreased in diameter. This arrangement makes the four propellant tanks of equal length and permits establishment of the shortest service module consistent with increased propellant requirements. This arrangement places the oxidizer tanks diametrically opposed while the fuel tanks are also diametrically opposed. This configuration and center-of-gravity excursion is shown in Figure 113. A decision has been made to proceed with design based on the latter configuration described above.

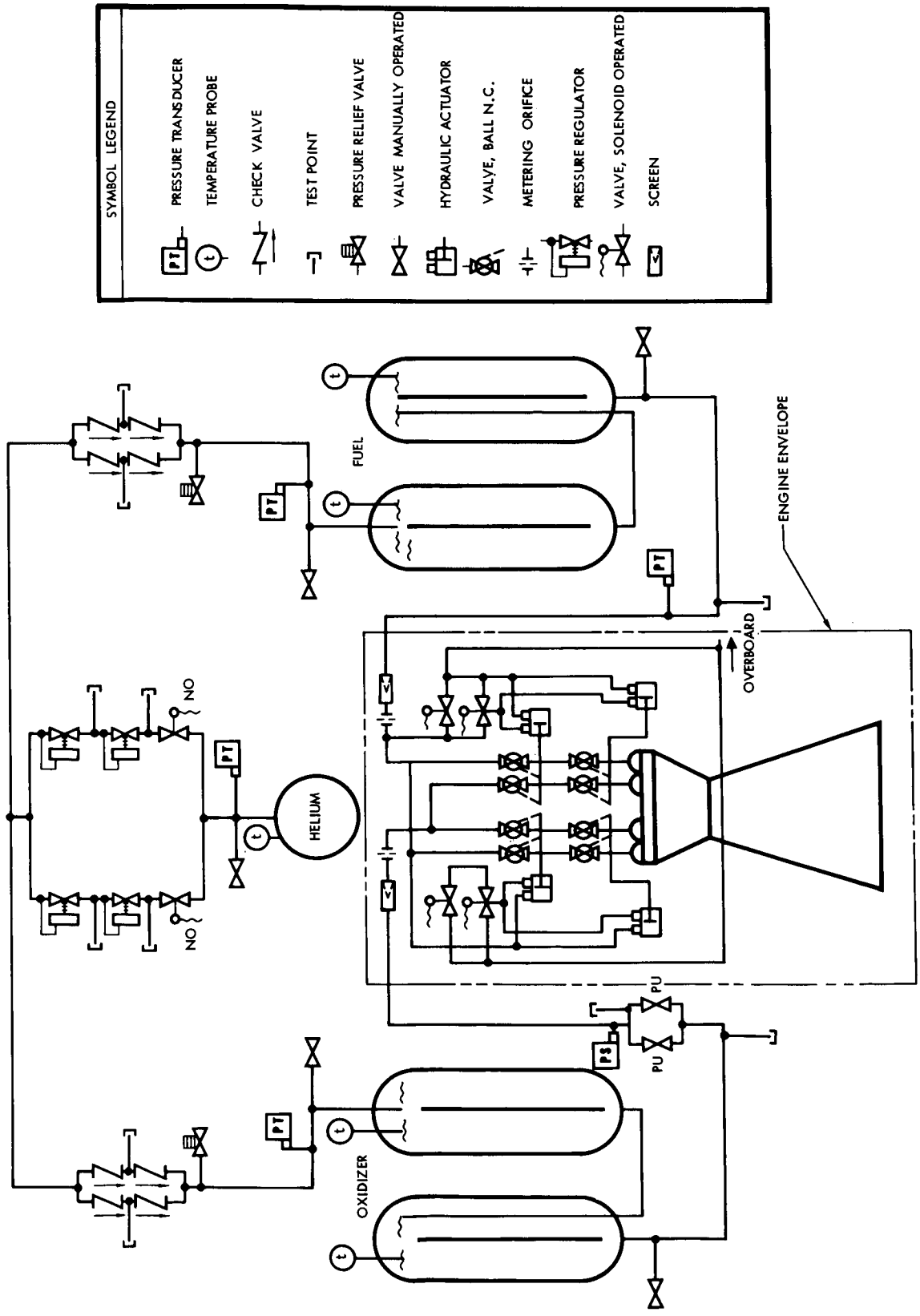

Figure 112. Pressurization System

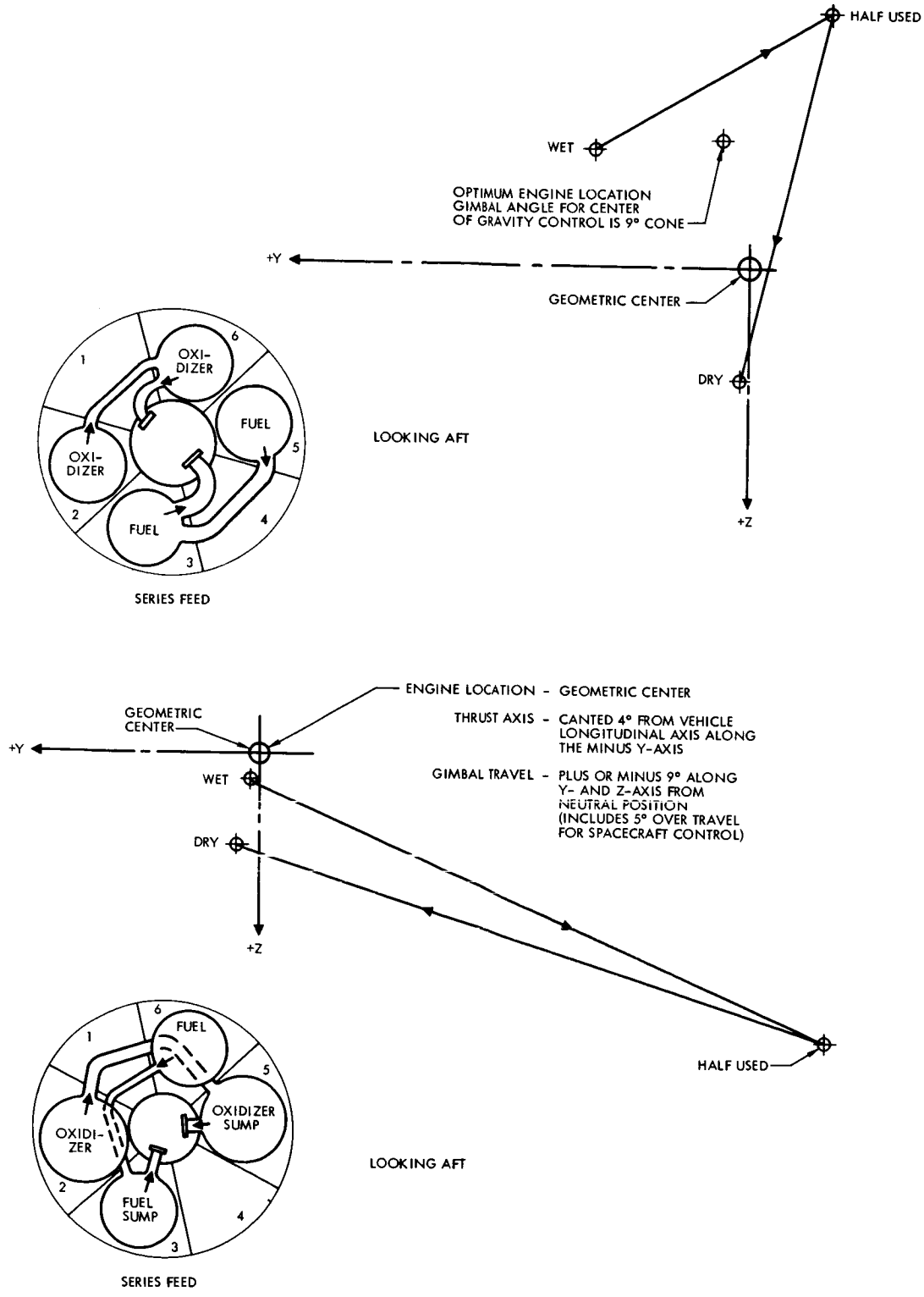

Figure 113. Center of Gravity Excursion

[redacted]

The propellant requirement change was necessitated by the change to a lunar-orbit mission. This mission profile requires use of the service propulsion engine shortly after translunar injection for midcourse correction. This early use of the service propulsion engine eliminates the objective of incorporating burst discs in the propellant system. The current system is shown in Figure 114.

Preflight Rating Test Engine Test Stand

Meetings have been held with the engine supplier to establish preliminary coordination and interface problems.

Design layouts of the basic structure, pressurization system, propellant tankage, and distribution system are progressing; and some detail drawings for manufacture are in work. Purchase requests for off-the-shelf components simulating flight hardware are in work, and suitability tests of individual components has begun. Program redirection resulting in revised propellant tank arrangement and tank redesign will be reflected in a slight slippage of engineering release schedule.

Propellant Utilization and Gaging System

Design and reliability requirements and coordinated development and qualification reliability test programs for the system have been submitted to contract specification group for establishment of the complete procurement specification.

Mock-Up 7

Simulation of the service propellant system in the mock-up included mounting of the pressurization panel in bay number 4, the fuel and oxidizer tanks, and a representation of the distribution system on the lower interface. One oxidizer tank was removed from the mock-up and shown as a separate display to allow a clear view of the helium tank and other equipment items.

ROCKET ENGINE

Engine Procurement

Selection of a subcontractor to furnish the service propulsion rocket engine was accomplished during this reporting period.

A preliminary procurement specification was prepared to define the performance and configuration requirements for the engine. This document was reviewed with personnel of NASA-MSC on 25 April and has been coordinated with Aerojet. The preliminary document is presently being employed

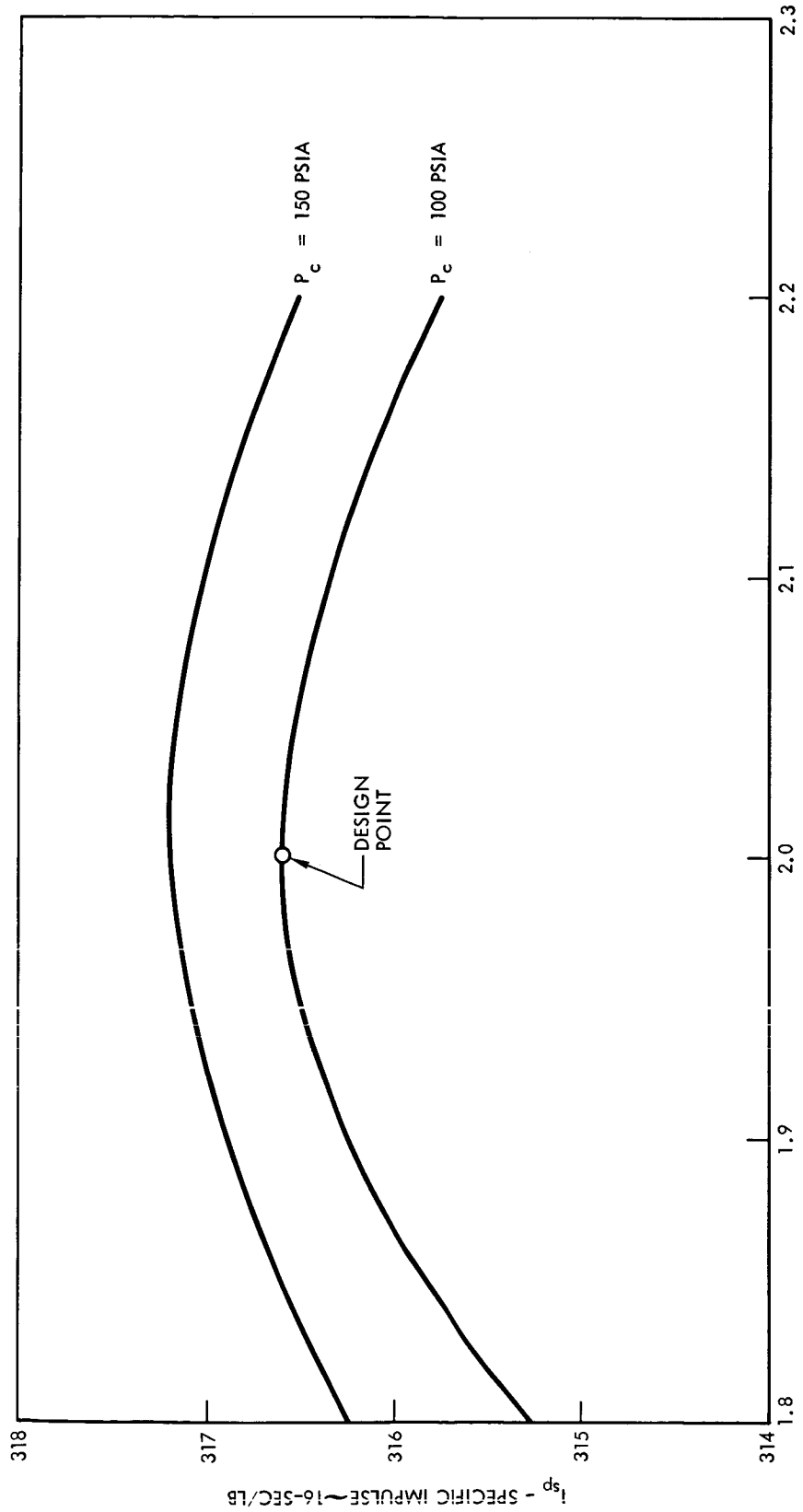

Figure 114. Estimated Specific Impulse Versus Mixture Ratio

as a working document by Aerojet and is being updated to reflect detail changes resulting from current S&ID and Aerojet design effort.

Engine Performance

The engine selected for use will be nonthrottleable, gimbaled, and pressure fed and will employ an ablative cooled combustion chamber and a radiation cooled nozzle extension. The engine will operate at a chamber pressure of 100 psia, a propellant inlet pressure of 155 psia, and an oxidizer-to-fuel ratio of 2.0:1. The engine will produce 21,500 pounds of vacuum thrust at a minimum 30sigma specific impulse of 313 seconds for a total duration of 750 seconds. The engine will be capable of a minimum of 50 restarts during its reliable operating life. Propellants are nitrous tetroxide (N_2O_4) as the oxidizer and an equal mixture by weight of unsymmetrical dimethylhydrazine (UDMH) and hydrazine (N_2H_4) as the fuel.

A summation of the engine performance is shown on Table 31 and Figures 115 through 119. As will be noted in these illustrations, a change in engine performance will occur as a function of time. This characteristic results from dimensional changes occurring to the combustion chamber throat as ablation occurs. While the performance variations are acceptable for Apollo missions and are adjusted to represent a maximum value, development effort will be expended on new ablative materials to reduce the amount of dimensional ablation and thereby tend to deliver more nearly constant engine performance.

An engine model specification submitted by Aerojet is currently being reviewed. This document will not be approved until completion of the qualification/reliability test program. The model specification shall be maintained in a manner to reflect the current engine status.

Engine Installation

Several layout studies have been conducted to determine the vehicle weight reduction associated with positioning of the rocket engine to the most forward position. Of the various parameters affected by engine location, the required gimbal angle is most important in determining the required space allocation. Various methods of gimbaling the engine have been investigated including a ring-gimbal configuration at the throat of the combustion chamber. This configuration is particularly advantageous in combination with the revised service module configuration in that the required gimbal angle can be reduced while still mounting the engine in a forward position to reduce the length of the S-IV adapter. As a result of this study, Aerojet has been directed to provide a throat ring gimbal.

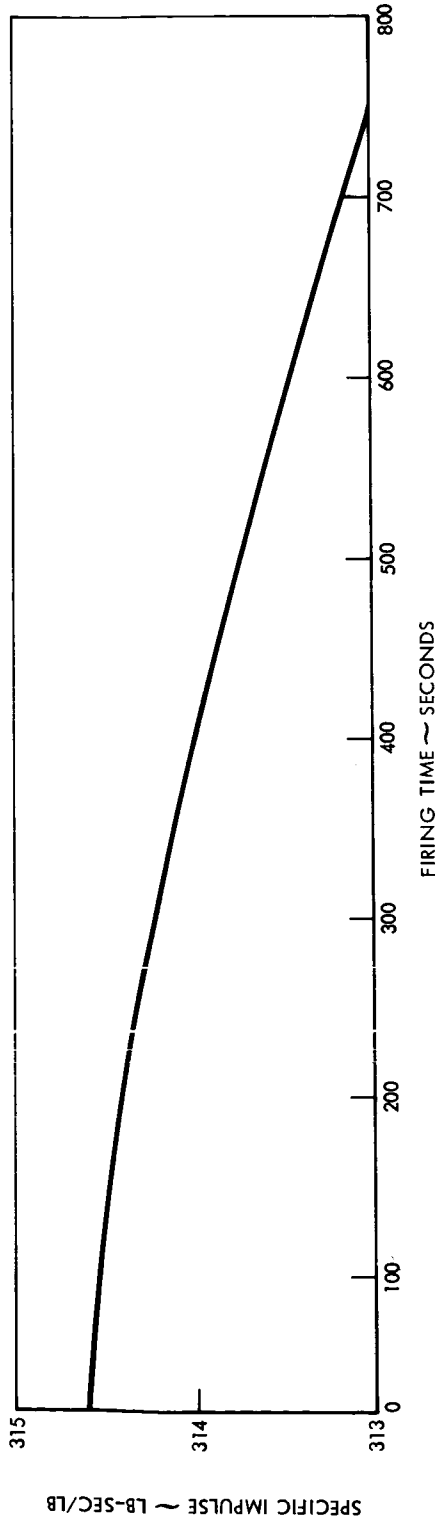

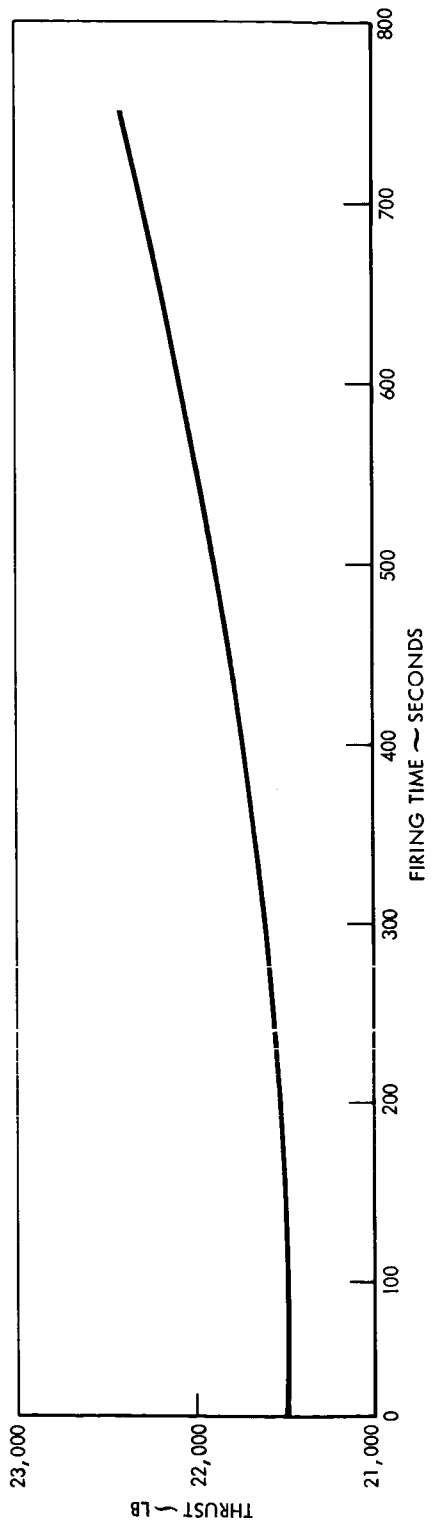

Figure 115. Estimated Thrust and Specific Impulse Versus Engine Firing Time

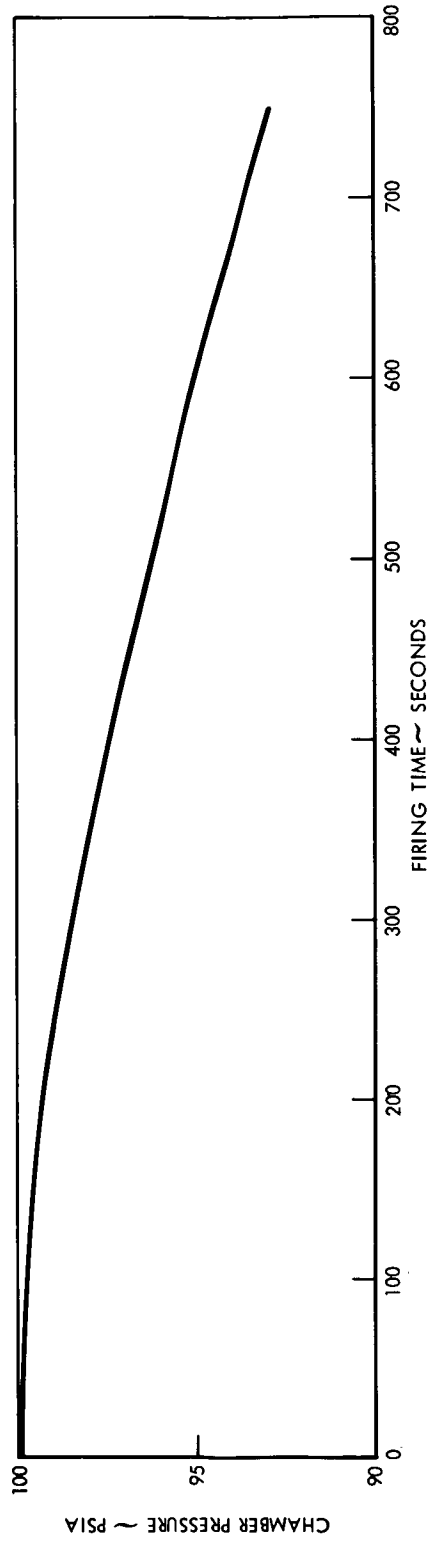

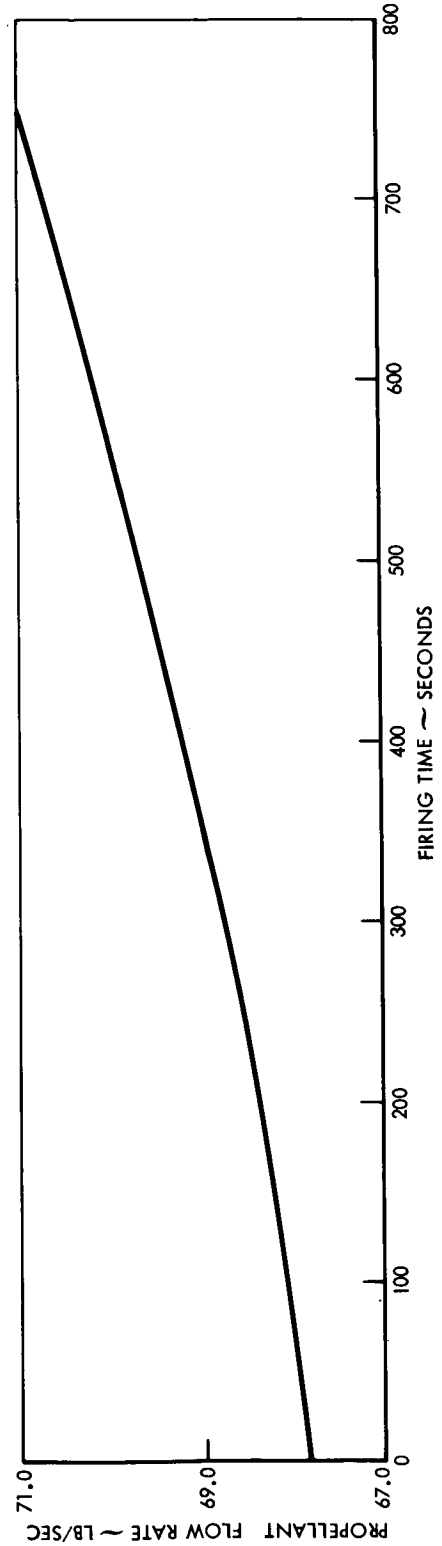

Figure 116. Estimated Chamber Pressure and Propellant Flow Rate Versus Engine Firing Time

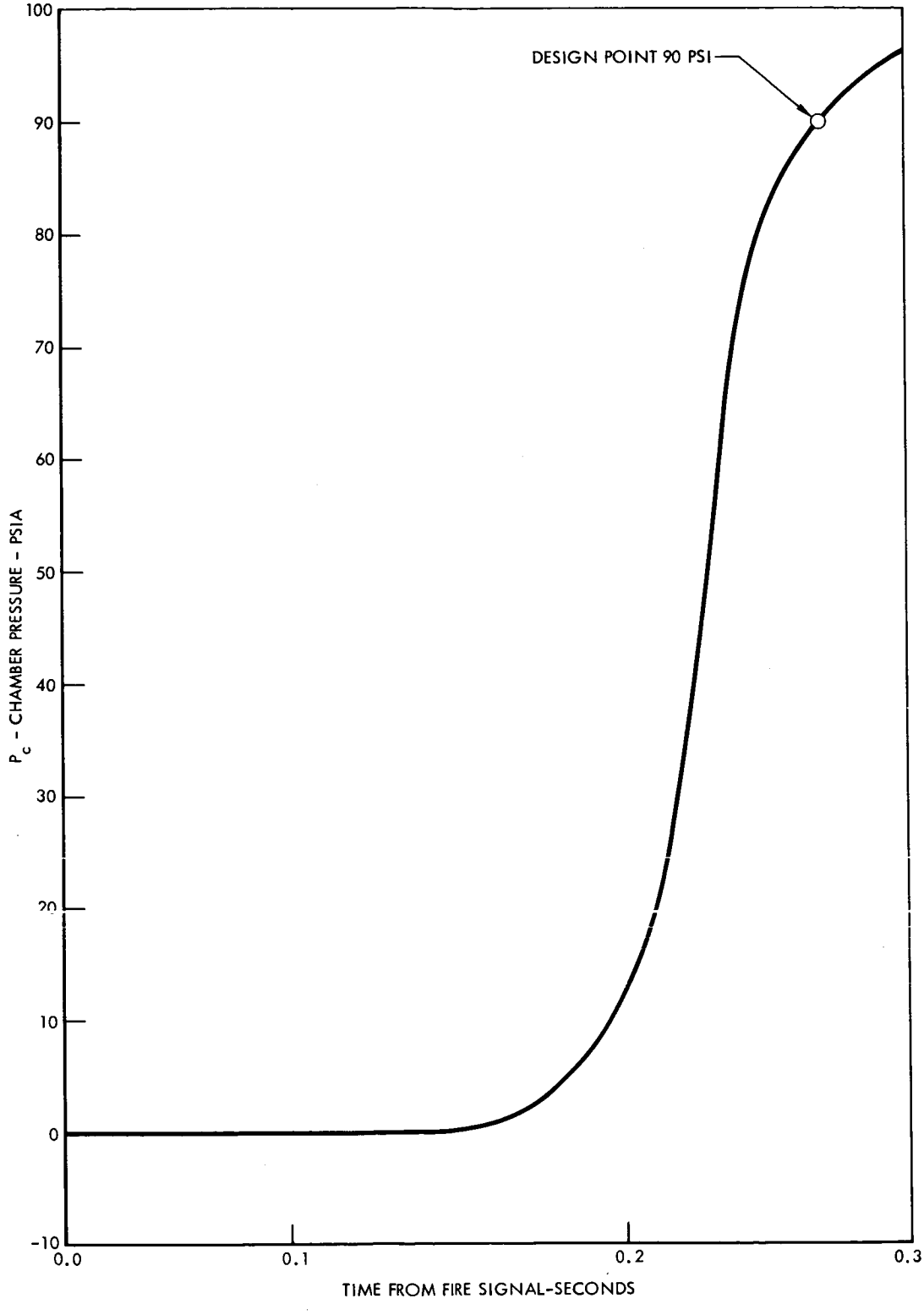

Figure 117. Estimated Start—Transient Chamber Pressure Versus Time

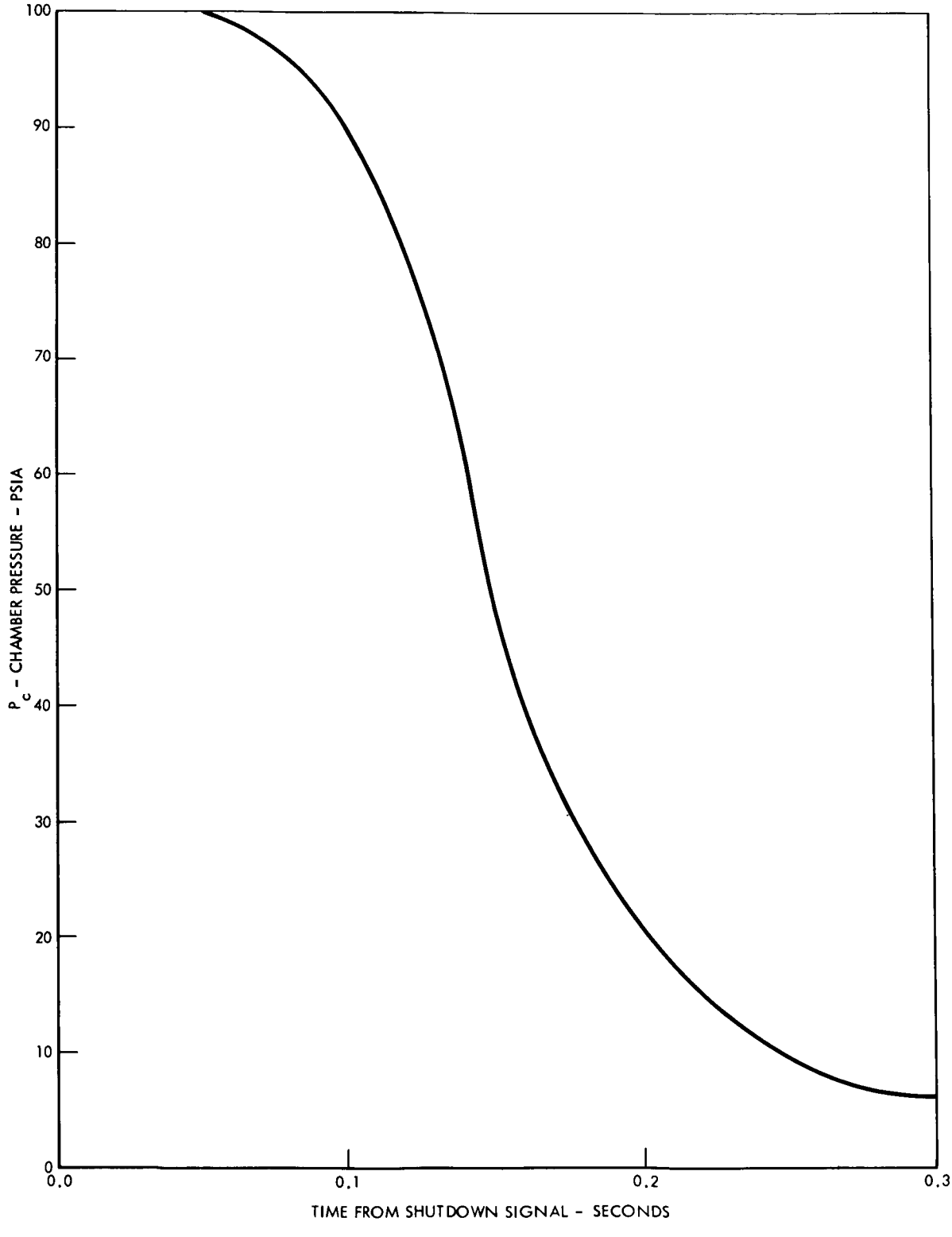

Figure 118. Estimated Shutdown—Transient Chamber Pressure Versus Time

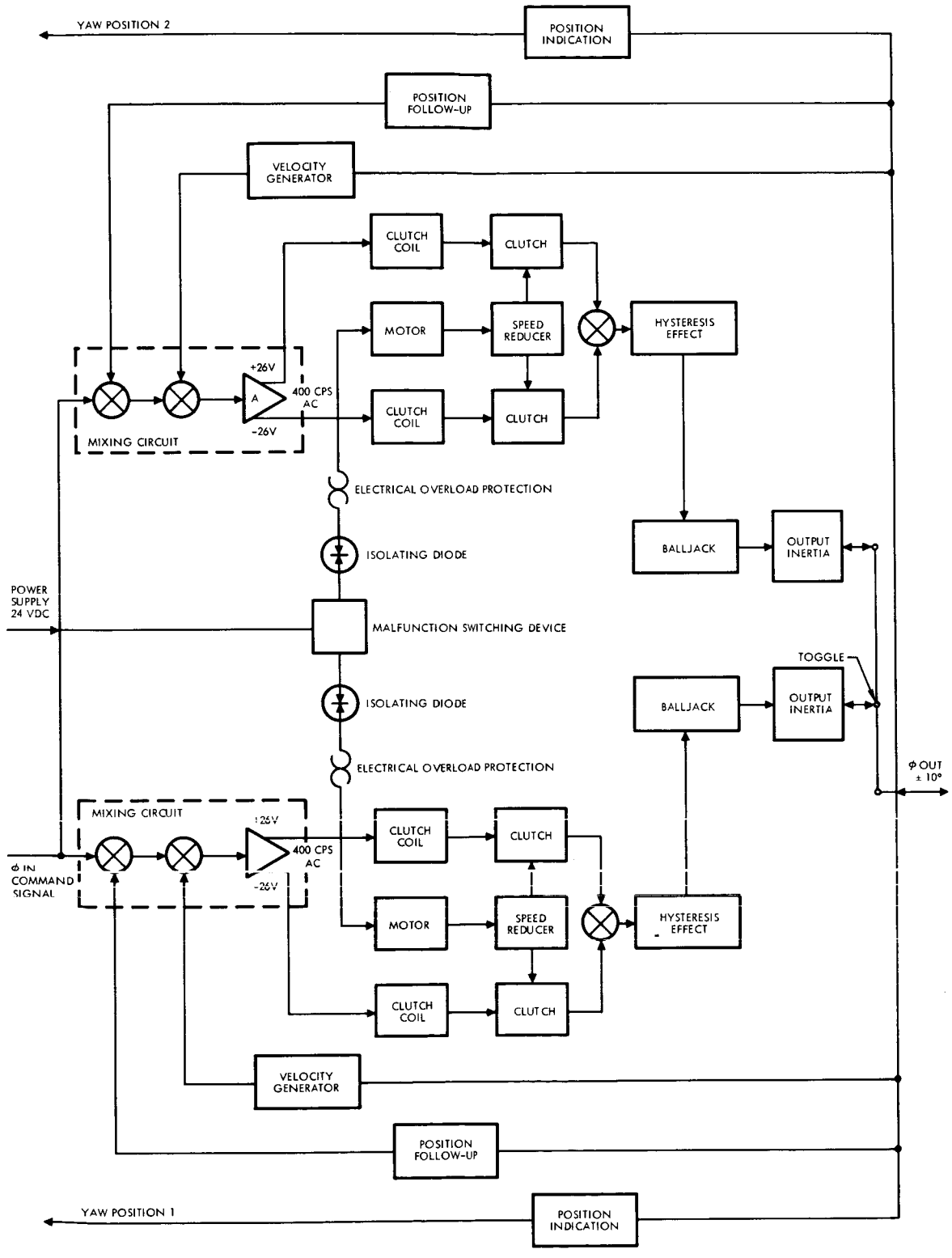

Figure 119. Electro-Mechanical Gimbal Actuator System

Table 31. Performance Requirements

Function	Requirement
Thrust	21,500 lb
Specific impulse	313 sec (3 sigma)
Mixture ratio $\frac{W_o}{W_f}$	2.0 : 1 ± 1%
Chamber pressure	100 psia
Nozzle expansion ratio	40 : 1
Propellant inlet pressure	155 psia
Propellant flow	
Oxidizer flow	45.27 lb/sec
Fuel flow	22.64 lb/sec
Restarts	50 minimum
Start transient impulse (to 90% rated thrust)	1535 lb/sec ± 285 lb/sec
Shutdown impulse (to 10% rated thrust)	4570 lb/sec ± 670 lb/sec
Reliability	0.99991
Thrust vector control	Electromechanical gimbal actuation
Reliable operating life	750 seconds
Fuel	50 : 50 mixture hydrazine and unsymmetrical dimethylhydrazine
Oxidizer	Nitrous tetroxide
Chamber cooling	Ablative
Nozzle cooling	Radiant

Gimbal Actuators

Thrust vector control will be accomplished by means of an electromechanical gimbal actuation system. This decision was made after a complete evaluation of electrohydraulic, hydraulic blowdown, and electromechanical systems. Each system was sized to attain the desired performance and was then evaluated for reliability, power requirements, environmental tolerance, weight, shelf life, maintainability, installation, checkout, and replaceability. A diagram of the system selected is shown on Figure 119. Detail requirements of the actuator design are being coordinated with Aerojet and Minneapolis-Honeywell.

Test Program

In conjunction with NASA comments regarding engine operation at off-design conditions, S&ID has reviewed the preliminary outline of the Aerojet test program for possible expansion to demonstrate all conceivable off-design conditions. To achieve this goal, Aerojet and S&ID are formulating a comprehensive test plan which will demonstrate attainment of engine reliability under normal operating conditions and will assure crew safety under extreme abnormal and off-design conditions. The Aerojet test plan is now being expanded to encompass the additional testing. When complete, the test plan will reflect all facets of the development program, including off-design testing, evaluation of alternate materials, demonstration of injector-chamber compatibility, and development testing under simulated altitude conditions at AEDC.

Detail review and modification of Aerojet's simulated altitude test program at AEDC has been completed. The altitude test program was discussed with personnel of NASA and AEDC on 31 May and 1 June respectively. Detail information has been transmitted to AEDC by Aerojet to support the preliminary planning for this program.

The engine preliminary flight rating test program and the qualification/reliability test program will be conducted using test fixtures composed of propellant and pressurization systems that closely simulate the vehicle systems.

Optimization Studies

A study is currently in progress to optimize the propulsion system for the purpose of reducing total vehicle weight. This study is considering both increases and decreases of chamber pressure, nozzle exit area ratio increases, and thrust increase. Since the engine is currently in design and major changes to the engine will induce schedule slippage, use of the existing geometry is also being considered. Should an increase to thrust, chamber

pressure, area ratio, or a combination thereof indicate that significant vehicle weight reduction may be attained, the engine supplier will be redirected.

MOCK-UP

A mock-up engine has been furnished by Aerojet for use in mock-up 7. This engine differs from the present configuration in that it has a ring gimbal mounted forward of the injector and valves. Although the mounting and gimbaling have changed, the basic engine and nozzle are representative of the engine to be used in flight vehicles.

LABORATORY SUPPORT

A program for welding, brazing, or soldering connections in the pressurization and propellant systems was prepared and approved by Apollo Engineering. The objectives of this work are directed to development of weld techniques that will provide a leak-proof installation of permanent fixed plumbing and removable connections of dissimilar materials.

Preliminary work on a process using solder for sealing threaded fittings into electroless nickel plated aluminum tubing was completed, and indications are the process is feasible.

Future work will include determination of a brazing alloy compatible with environments of the propellant systems and determination of alloys and techniques for brazing corrosion-resistant steel, aluminum, and titanium. Special welding equipment for fusion welding of tube joints is required and is currently being designed.

METAL SEALS

Seals are required for the nitrogen tetroxide, unsymmetrical dimethylhydrazine and hydrazine, and helium systems for the service and command module. Elastomer seals would ordinarily be adequate for these applications, but the effect of long-term, hard-vacuum exposure on elastomeric materials is not known. Therefore, metal seals will be evaluated for the above systems, in addition to elastomers.

The initial phase of this study will consist of evaluating compatibility of several electrodeposited coatings with either nitrogen tetroxide or a 50-50 mixture of unsymmetrical dimethylhydrazine and hydrazine. The metallic coatings currently under consideration are silver, gold, tin, indium, and lead. These metals will be deposited on 17-4PH steel. In addition to the compatibility tests, galvanic studies will be made with these coatings in

contact with 6061-T6 aluminum, 6Al-4V titanium, and type 304L corrosion-resistant steel in the presence of the above propellants.

CLEANING AND PURGING

Investigation of cleaning and purging information on materials of construction, components and systems configuration, and the functional aspects of the system have been in process during this quarter. Preliminary specifications have been prepared to control the cleaning and purging activities applicable to the Apollo program.

[redacted]

SERVICE MODULE AND SUBSYSTEM INSTALLATION

STRUCTURAL CONFIGURATION

The ground rules that dictate the structural concept of the service module can be categorized into the following major requirements: command module, propellant tank, engine, equipment, and transonic buffet loads must be reacted and distributed into the primary structure.

An aerodynamic outer surface that will allow access to the equipment compartment, extension of the antennas in space, and positioning of the integral radiators on the lunar surface must be provided. Configuration flexibility must be provided to allow changes in subsystem requirements without serious weight penalty.

In essence, the structure consists of an outer and inner cylindrical shell with six radial webs connecting the inner and outer cylinders. Bulkheads are located at the top and bottom of these cylinders.

Mission profile studies have established various propellant requirements. The universal service module propellant requirements are now 39,500 pounds, 8500 pounds more than the initial requirement. Studies of various service module configurations have been conducted for use in trade-off studies including various mission profiles. Most forms exhibit a common detrimental feature. Excessively large gimbal angles were required on the main propulsion unit to align the thrust through the combined command module - service module center of gravity with one set of tanks empty and using series feed for the propellant system (Figure 120). The configuration now being studied uses the original 154-inch-diameter service module with all propellant tanks of the same length. The sextants were changed from equal 60-degree segments to two each of 50 degrees, one of 60 degrees, and one of 70 degrees with oxidizer tanks in the 70-degree sextants, fuel in the 60-degree sextants, and equipment in the 50-degree sextants. The new tank diameters are 51 inches for the oxidizer tank and 45 inches for the fuel tank (Figure 121).

Engine gimbal location directly influences the adapter length; therefore all the studies have included gimbaling requirements. The use of the throat gimbaling on the 140-inch-long service module required a 105-inch adapter length for an engine expansion ratio of 40:1.

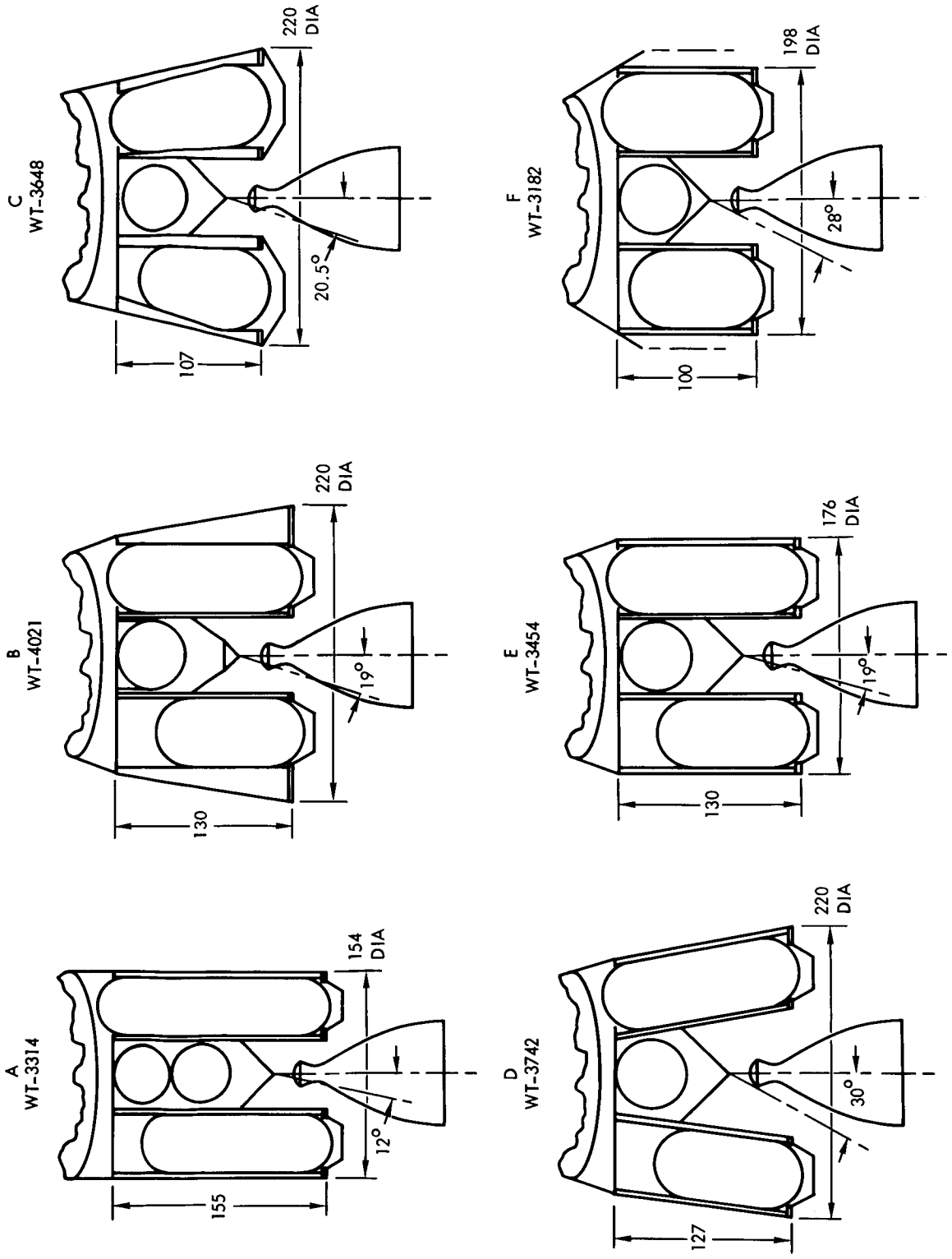

Figure 120. Service Module Configurations

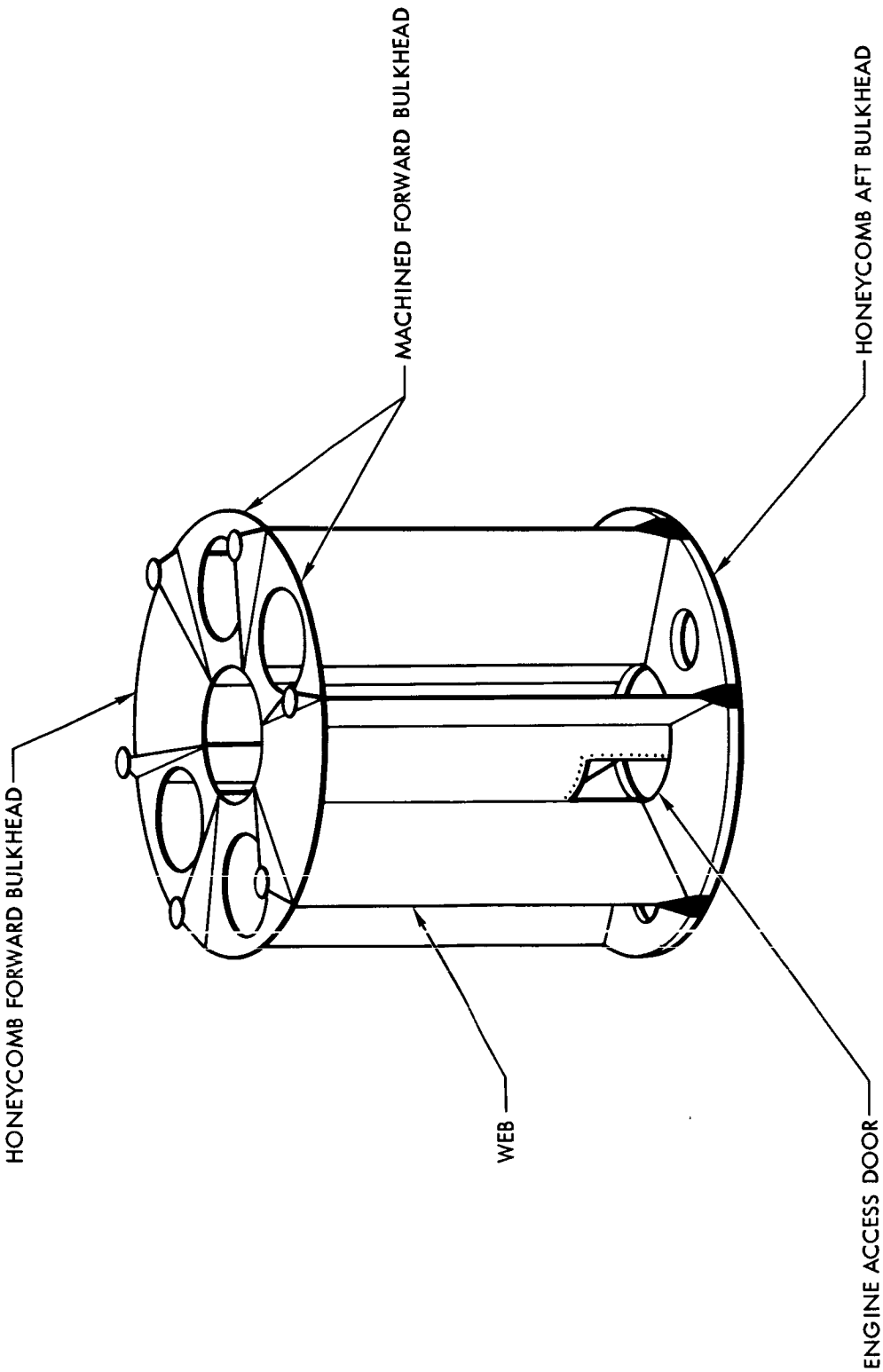

Figure 121. Service Module Basic Structure

Design studies have been conducted of various structural sextant beam configurations. These have included truss, numerical control machined frame with honeycomb interior, sheet metal build-up, and full numerical control machined beams of various types.

Drawings have been released to manufacturing for two test panels. One test panel is a numerical control machined sextant beam, the other is a bonded honeycomb structure of 220 degrees of the aft bulkhead. These panels will be used for structural tests to confirm the design prior to manufacturing the static test service module.

PROPELLANT TANKS

The present design calls for two oxidizer tanks, two fuel tanks, and two helium tanks. After investigating various materials and fabrication methods, it was decided to manufacture the tanks from Ti-6AL-4V forgings. The spherical ends and cylindrical portions of the tanks are machined from the forgings, welded together, and heat treated. Structural tank and tank support tests have been initiated to verify the analysis and to provide data for optimization of the support skirt and manhole cover design.

The propellant tanks are to be designed for 240 psia maximum.

Tank access door seal test drawings employing O-rings for sealing have been completed and released to the system.

ADAPTER

On 16 April, the design review board was given a briefing on the adapter. The board made no recommendation for design changes, and this configuration will be used for the Apollo design. The adapter design was limited to the C-1 configuration.

At the lower end, the adapter is attached to the instrument can by 32 attach bolts and to the service module by 6 attach fittings actuated by a separating mechanism.

The structure is designed for a shell distribution at the aft or lower end. The upper end is designed with the six attach fittings reacting the axial load and moment.

The adapter structure is basically made of six aluminum panels, longerons, and a forward and aft frame.

An air-conditioning barrier between the adapter and the instrument unit has been included on an adapter drawing as requested on

MSFC drawing 10M03208. It is shown as a vinyl-covered nylon diaphragm. Although this may be vulnerable from a service consideration, a rigid type of diaphragm would be heavier by almost 75 pounds. The adapter drawing of the new aft ring maintains the same aft ring bolt circle diameter shown on MSFC drawings 10M03064 and 10M03208.

An aluminum honeycomb test panel drawing has been released to the system for manufacture. This panel includes an access door.

To verify analysis, static testing of the panel will proceed until the skin buckles. Later, a pyrotechnics device will be added to the panel to check out its effectivity for the blow-out panel.

RADIAL WEBS

The present configuration is an integral web stiffener design with service module longerons and command module support structure machined integral with the web.

Theoretical studies of several web configurations are currently being made to determine the optimum web design based on minimum weight and equipment mounting requirements. A structural test of the radial web has been defined, and the test article is being fabricated.

LOWER BULKHEAD

The structural configuration of this component consists of a honeycomb sandwich material suitably reinforced to carry the propellant tank loads.

A structural test has been initiated to evaluate the strength, stiffness, and deflection characteristics and to determine the mode of failure. The test specimen has been instrumented to provide information on the tank-skirt deformations and tank load paths.

ENGINE MOUNT STRUCTURE

There are two methods for mounting the engine currently being proposed, a throat-mounted gimbal attached to the lower bulkhead and end-mounted gimbal fastened to the radial beams. Both methods are acceptable structurally.

UPPER BULKHEAD

The structural configuration of this component consists of a honeycomb sandwich reinforced with rings at tank cut-outs. The configuration of this

component will change considerably if a new command module to service module separation system is adopted.

OUTER-SHELL PANELS

The outer-shell panels will be made structural, where practicable, in order to save weight and increase rigidity. In some cases, the panels, although structural, will still be removable. In other cases the panels will be fixed and continuous. Studies are being made to determine optimum configurations on a cost and weight basis.

The antenna door is nonstructural because it must be deployed to allow extension of the antennas and to provide proper positioning of the integral radiators.

Since the antenna door is nonstructural, the body loads must be carried around the door through the six radial shear beams.

One of the outer-shell panels will be tested to ultimate loads to verify the analysis. The panel chosen for test is the tank compartment door, which is hinged on one side and bolted on the other three sides. This door is structural. It will be adequately strain gaged to determine the redistribution of loads from the longerons into the door.

Based on a series of weight studies, it was decided to use bonded aluminum honeycomb for the entire outer shell. The core will be made of 5052-H39 material. The face sheets will be made of either 2024-T3, 7075-T6, or 7178-T6 based on the results of a temperature survey on the outer shell for the different phases of the mission.

The panels are being sized for loads only at the present time. Minimum gages, required for meteoroid protection, have not been definitely determined; until such information is available, sizing will be based on loads only.

Body loads have changed a number of times during the last quarter as refinements have been made. This has necessitated resizing of all structure for each load change.

BOILERPLATES

Service module boilerplate 9, 13, and 15 have been designed and are ready for release.

These identical boilerplates are made of 1020 steel. The construction consists of a 0.134 inch outer skin reinforced by circumferential frames

spaced approximately 12 inches apart. In addition, there are six vertical beams to distribute the loads from the command module into the skin of the service module. The service module is attached to the adapter at six places equally spaced around the outer circumference.

The construction of the adapter is similar to the service module except the adapter does not have six vertical beams but 32 stiffeners. These 32 stiffeners act to distribute the loads from the booster into the adapter. The connection of the adapter to the booster is by thirty-two 5/16-inch bolts spaced equally around the outer periphery.

Release of these boilerplates is being held until a new total length for the service module and adapter is determined. An insert similar in design to that of the present adapter will be added between the service module and adapter to give the required total length.

These boilerplates have been designed for the latest C-1 body loads and external pressures.

Service module and adapter boilerplate 12, 21, 22, and 23 will be made identical to boilerplate 9.

SYSTEM SUPPORT

Additional RCS variations, in addition to the stowed RCS engine package, consist of structure, bottles, and related plumbing and equipment mounted on service module panels. These plug-in concepts are modular and in some cases are interchangeable and replaceable. They do not incorporate the engine retract feature. Stabilization and control requirements in conjunction with spacecraft design will be the major design and placement factor of the RCS engines.

External service module structural honeycomb test panels are in manufacture for dynamic testing. The full-scale test panel contains honeycomb of 3/4-inch cell size and skin sizes to 0.032 inches. Core is 5052-H39, and skins are 7075-T6 aluminum. These material combinations provide meteorite protection.

An S&ID drawing showing the C-5 launch tower 360-degree servicing requirements encompassing the entire length of the service module and adapter was forwarded to NASA.

The refined service module 50-degree equipment bays contain slightly less volume than the 60-degree bay of the 124-inch service module (Figure 122).

CONFIDENTIAL

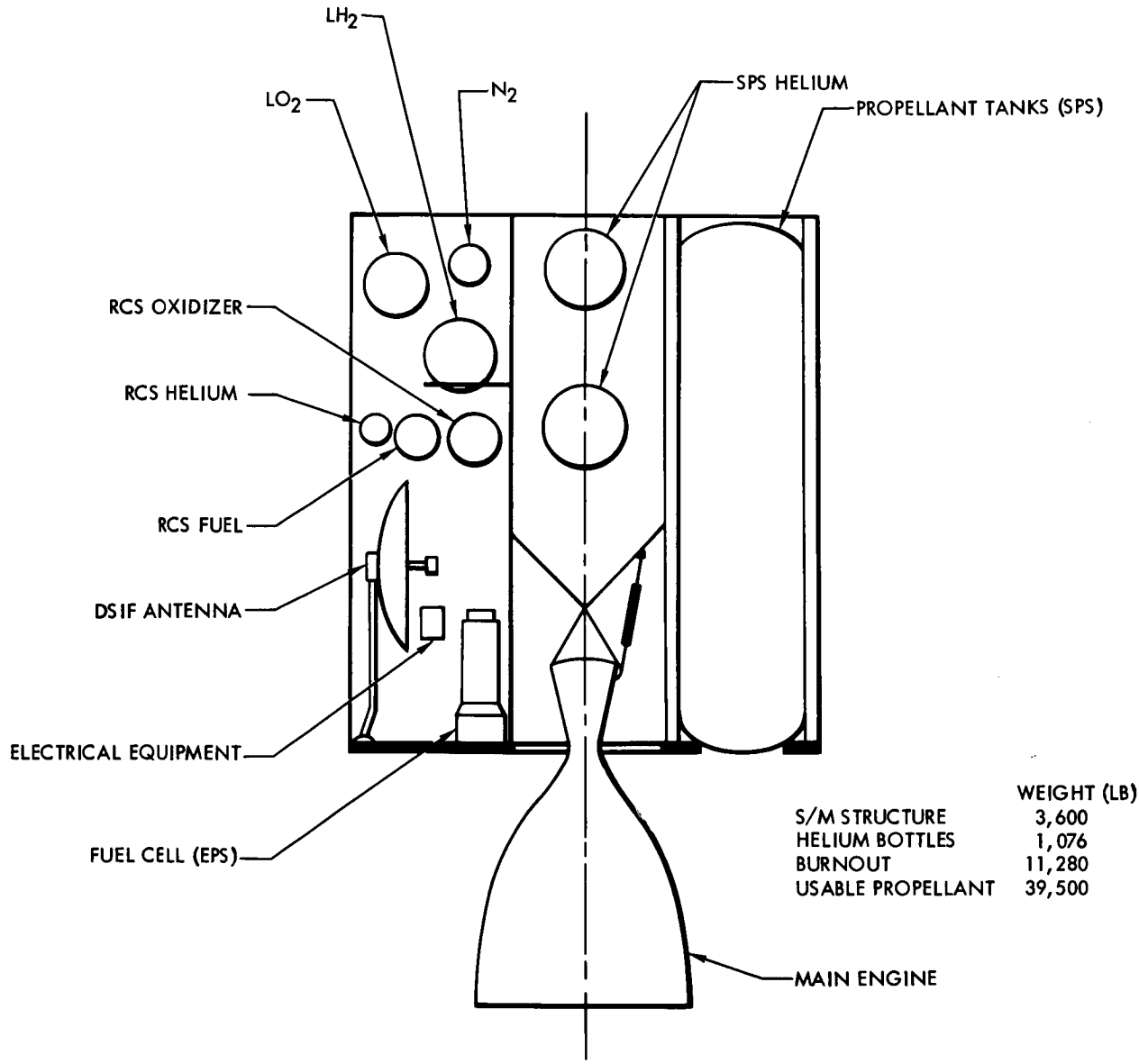

Figure 122. Service Module Equipment Installation

CONFIDENTIAL

COMMAND MODULE TO SERVICE MODULE SEPARATION SYSTEM

The system in use consists of six compression pads and three tension tie arms holding the service module and command module together. This system has gone through considerable refinement in design of the arms and latching mechanism; however these parts are still quite heavy because of the large offset loads involved.

The system used consists of three mechanical arms which are attached to the service module structure by means of a pivot and latch. These arms engage the command module at a ball-and-socket joint adjacent to the umbilicals. The umbilical area is opened by means of two doors, which will close upon module separation. Each of the three arms is locked to the service module by a toggle latch that is preloaded closed by a cable system. Cables from the three latches pass through dual explosively actuated cable cutter devices. Each of the mechanical arms is impelled outward by a gas thruster which is energized by a centrally located generator that also powers the dual cable cutters. Design and analysis work is under way on this system, as is the detailing of the early boilerplate components.

SERVICE MODULE TO ADAPTER SEPARATION SYSTEM

A design layout of the system has been completed.

A direct mechanical connection is made between the longeron structure of the service module and the adapter. The system consists of six toggle latches interconnected by a cable system that passes through two explosively actuated cable cutter devices. The cable cutter devices provide a dual, center-point release for the six latches. Initiation of either of the cable cutters will effect a simultaneous release of all six latches.

TEST

General test requirements have been written for all the major systems and have been coordinated with planning. Detailed test plans are now being written.

The scope of the first phase of system testing will be great enough to establish the workability of the systems and the confidence level necessary before boilerplate testing. A more detailed and exacting phase will follow as requirements for space environments and the various mission parameters become more accurately known.

DEEP SPACE INSTRUMENTATION FACILITIES (DSIF) ANTENNA DEVELOPMENT SYSTEM

Design studies have been made for the deployment of the DSIF antennas (including radar configuration) in conjunction with the deployment of the environmental radiator doors. These studies were made with the systems concept of lunar landing or lunar excursion module.

The current design of the service module includes system support capabilities of both the lunar-landing and lunar-excursion modules. The following system is compatible with this concept.

Environmental control system radiator doors can be opened and closed and be deployed into a position rotated 90 degrees and normal to the X-axis (axis of rotation of the spacecraft). The radiator doors can be closed while the antenna is deployed.

The DSIF antennas (with radar) deploy into a position external to the spacecraft with capabilities of unobstructed hemispherical scanning. The antennas may be retracted into the service module and the radiator doors closed.

The radiator doors are structurally supported by a journal and hinge combination on one edge of the door at the approximate midpoint position. The door is further supported for any g load condition by toggle latches at each of the four corners. A motor-driven linear actuator provides motion for opening and closing the door by applying a moment to the hinge. Rotation into the deployed position normal to the spacecraft X-axis is performed by another linear actuator rotating the door about the hinge journal reacting between a bellcrank and the door. The toggle latches are operated in sequence with the opening and closing of the doors through push-pull rods whose motion is imparted by an over-ride in the door mechanism.

The antenna boom is a one-piece beam pivoted at one end and of sufficient length to deploy the antenna centerline 72 inches from the mold line of the module. The boom is rotated through approximately 90 degrees into deployed position by a motion imparted through a folding drag arm that is locked in a straight line dead center position and is capable of reacting loads induced into the antenna mass. A motor-driven linear actuator provides the force for deploying and stowing the antenna.

Further studies and design layout will progress in conjunction with the detail development of design and space arrangement requirements of the service module.

WEIGHT CONTROL

Numerous configuration weight estimates have been prepared for mission objectives other than for the lunar landing. The universal service module is being evaluated for either a lunar-orbital or lunar-landing mission.

Some of the weight trade-off studies that have been conducted on various alternate design approaches for the current lunar landing mission concept are service module reaction control engine mounting provisions, integrated versus nonintegrated ECS and EPS for lunar day or night missions, and service module RCS.

MOCK-UP

Maximum effort has been expanded on the fabrication of mock-up 7. This unit has been completed with all structural and installed systems reflecting the initial design.

LUBRICANTS

A plan of action has been drawn up covering the test effort necessary to support a program to develop suitable lubricants and bearing materials for the Apollo spacecraft. Three main areas covered by the plan are development of suitable apparatus for lubricant research, development of suitable apparatus for bearing interface seizure studies, and subcontractor service requirements.

SPACE RADIATORS

The investigation on feasibility of chem-milling a roll bonded panel was completed with success. A weight saving of about 30 percent was achieved by a reduction in thickness from 0.062 to 0.032 inches by chem-milling. The panel was free from defects as verified by radiographic tests and proof pressure testing at 225 pounds per square inch. The project has been completed. The test panel was returned to Apollo structures for evaluation.

Display panels, approximately one foot square, were fabricated to represent design concepts of the service module radiator panels. Bonded flanged test sections typical of radiator panel edge attachment were fabricated and tested.

PYROTECHNIC DEVICES - MECHANICAL SYSTEMS

Tests were conducted on a pyrotechnic cable cutter to determine the ability of the cutter to sever a 5/32-inch-diameter stranded stainless steel

cable and to determine whether the cutter would be reusable for numerous firings. Laboratory tests disclosed that the squib would fire with only one of its bridge wires energized. The cutters operated correctly, and no damage or erosion was noted on the inner diameter of the cutter bore.

Additional pyrotechnic devices will be evaluated during the next period.

ELECTRICAL POWER SYSTEM

SYSTEM ANALYSIS AND EVALUATION

System analysis and evaluation work was directed toward design review of the fuel cell system layouts. Particular emphasis was placed on evaluation of the fuel cell instrumentation system, fuel cell flow schematic, secondary coolant regenerator, and graphs showing physical properties and power requirements for pumping ethylene glycol under varying temperature conditions. Results indicated that design modifications will be necessary to ensure fuel cell reliability objectives.

Fuel cell materials evaluation studies on lithium hydroxide and liquid oxygen have been conducted. A preliminary design for test facilities and equipment has been made. Evaluation tests were conducted on a three-phase 400 cycle static inverter. Specification for test equipment and facilities have been prepared and submitted to subcontractors for bids. During the next quarter, evaluation tests on insulation materials will be initiated; component evaluation tests will be conducted; and design of the electrical systems breadboard tests will be completed.

FUEL CELL TEST PLAN

The fuel cell system instrumentation list will be used for boilerplate 16 and 18 to provide diagnostic analysis of individual parameters throughout the system. The information required will include temperatures and pressures of reactants, coolant, water pH and other performance parameters. An evaluation leading to the specific sensor-characteristics and specifications is being initiated.

The major areas in the test program include the breadboard module tests, prototype system tests, and heat rejection tests. These tests are intended to verify performance, endurance, and environmental characteristics. The heat rejection tests will determine the heat dissipation factors as functions of glycol flow rates under simulated solar and deep space environmental conditions and radiator configuration.

FUEL CELL HEAT REJECTION STUDY

Analysis of the effect of heat inputs and withdrawals to the radiator due to the service module skin equilibrium temperature showed that either the radiator would have to be insulated or the service module equilibrium

[redacted]

skin temperature would have to be controlled. S&ID is conducting an analysis of the second approach to this problem.

CRYOGENIC FLUID REQUIREMENTS AND UTILIZATION

A study was begun to ascertain the feasibility of supplying hydrogen and oxygen to the house spacecraft during fuel cell operation and the proposal of a safe method by which they might be handled.

POWER DISTRIBUTION

A revision of the electrical load analysis is in progress and will reflect the increased 400 cps ac power requirements to be supplied by the spacecraft inverters.

The revision of the postlanding electrical load analysis has resulted in a decrease in energy required to approximately 1250 watt hours during the 7-day period. The electrical load analysis for the reentry period of 25 minutes shows an energy requirement of 900 watt hours.

Investigation has indicated that one battery can be designed to operate under either the reentry load or postlanding load. A one-battery specification was prepared.

The present concept is to transform and rectify ac power and add this controlled voltage to the dc bus voltage to charge the battery. This method is efficient, does not require separate inverter, and does not impose a large load on the spacecraft inverter.

The dc distribution system (Figure 123) illustrates the dual isolated bus concept. Each essential load is supplied power from each main bus through an isolation diode. The nonessential loads are supplied from one or the other of the main buses. Each of the redundant sequencers and pyrotechnic systems is supplied power from each main bus.

The ac distribution system (Figure 124) illustrates the connections of these inverters with redundant ac buses. Each load is capable of obtaining power from either bus. Either or both buses may be energized.

The battery control system (Figure 125) illustrates the manual operation of the battery chargers to charge any of the three spacecraft batteries with either battery charger. During charging, the batteries may not be placed on the main dc buses.

The undervoltage sensing system provides automatic removal of battery chargers and application of the batteries to the main dc buses when

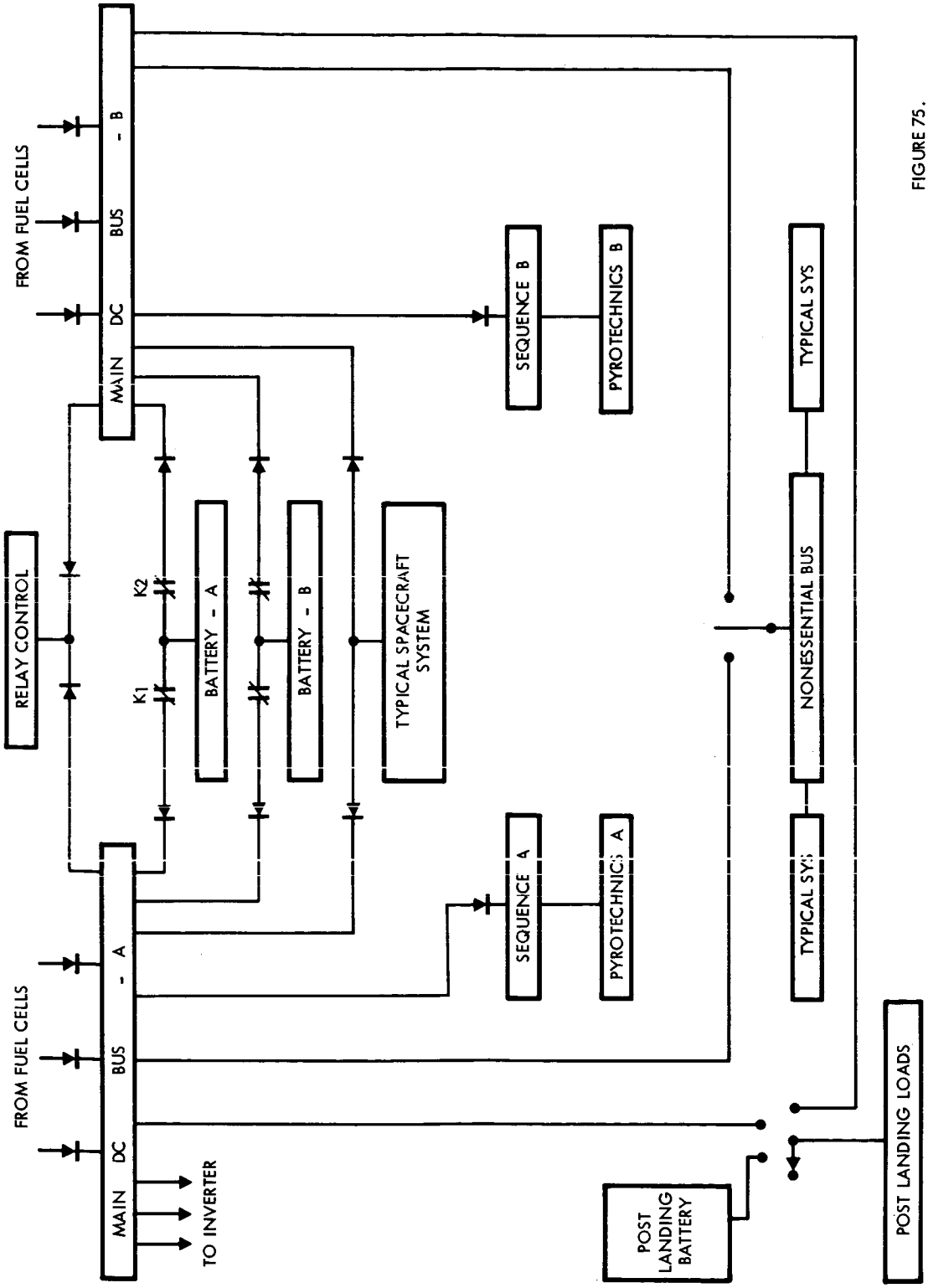

FIGURE 75.

Figure 123. DC Distribution System

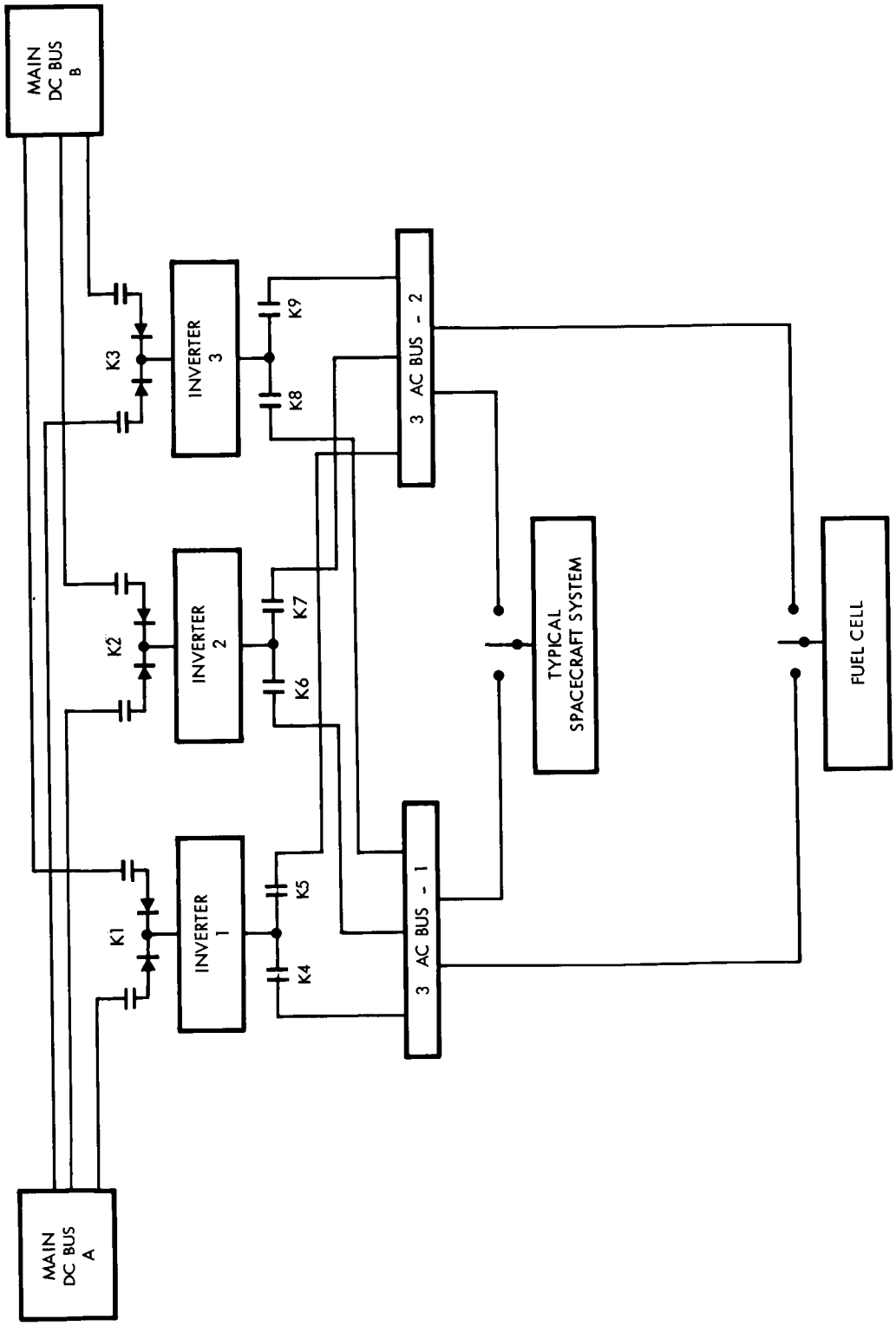

Figure 124. AC Distribution System

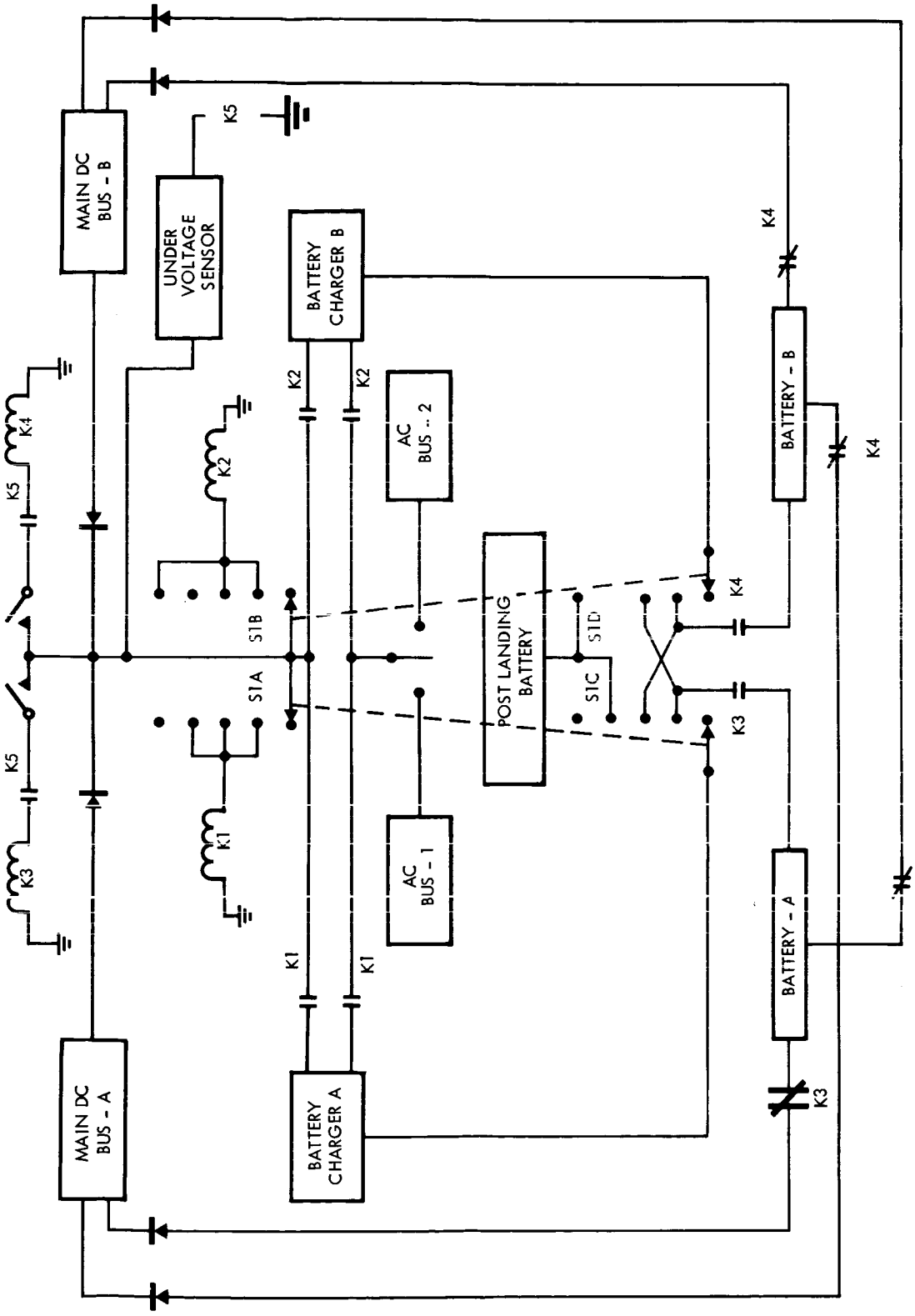

Figure 125. Battery Control System

the average dc bus voltage drops below 25 volts. This operation can be manually controlled.

SEQUENCER

Schematics, which received from NASA after development of the sequencer was assigned to S&ID were analyzed and modified to suit the requirements of boilerplate 6 and 20.

Preliminary functional diagrams were prepared for boilerplate 6, 20, 12, 21, 22, 23, 13, 15, 16, and 18 and for command module 001, 007, and 010. The drawings were submitted to NASA. Schematic diagram preparation for boilerplate 12, 21, and 13 is in progress. Two independent reliability studies were conducted on relay design for boilerplate 6. Both confirmed the reliability of the present system.

PYROTECHNICS

At the request of NASA, an investigation was made of both an explosive bridge wire (EBW) initiation system and a hot wire initiation system. As a result of this investigation, S&ID decided that an EBW initiation system should be used for all category A range safety functions and category B functions that were considered to be critical for crew safety.

The subsequent decision to use EBW's for all landing system functions resulted from trade-off studies involving weight, space, and reliability requirements.

Schematic diagrams, wiring diagrams, and layouts of a combined launch escape and earth-landing system sequencer were released by S&ID for boilerplate 6. These will be revised to include the signal conditioning diodes and telemetry resistors.

LAUNCH ESCAPE SUBSYSTEM (LES)

The S&ID sequencer currently includes provision to operate the thrust vector control (TVC) squib valve. As a result of studies now being made on the TVC, the squib may be eliminated or replaced by a sutstitute method that will affect sequencer design.

Deployment of the forward heat shield before jettisoning the tower during abort is being considered. The effect on the sequencer is under study. Preliminary functional and electrical schematics have been prepared for a sequencer that will deploy the heat shield before tower jettison for abort conditions, after tower jettison for abort conditions, or after tower jettison for normal flight.

ELECTRICAL POWER SUBSYSTEMS

Wiring Techniques

Studies on bonding outside the launch escape motor showed that temperature requirements will be a deciding factor. Study will be continued when temperature parameters are established.

Polytetrafluorethylene insulated 600-volt copper wire will be used as a general purpose wire for early boilerplate vehicles.

Umbilical Connectors

An investigation is being made of umbilical disconnects that can be mounted flush on the command module skin. A temperature of 4000 F for 20 minutes has been used as a basis for discussion with suppliers; the maximum capability currently available is 2200 F for 5 minutes. Manufacturers believe that given development time the Apollo requirements can be met.

Circuit Protection Devices

Laboratory tests were initiated to determine the performance characteristics of circuit breakers and circuit protective devices under space environmental conditions. Vibration, shock, and temperature appear to present no severe problems. Vacuum testing has not been completed.

Lighting Devices

Extensive laboratory tests were carried out to determine the performance and reliability of fluorescent lighting under vacuum, vibration, and environmental conditions. The testing is completed, and a detailed report is being written. Tests showed that the main problem areas will be in conditions of extreme temperatures (below -20 F and above 200 F) and in the lower ranges of dimming when electrically controlled.

[redacted]

REACTION CONTROL SYSTEM (RCS)

PROPELLANT SYSTEM

Pressurization Subsystem

The pressurization subsystems as presented in Figure 112 (service module) and Figure 126 (command module) show a helium storage vessel for each system. The command module systsms A and B include a normally closed squib valve between the storage vessel and pressure regulating system. In the event the squib fails to open, reduncancy is provided by system B. The squib valve reduces potential system leakage during the period prior to system pressurization. A filter is located downstream of the squib valve. The service module system does not include the squib valve and filter because system operation can occur early in the mission.

Command module systems A and B and each of the service module systems are schematically the same from this point (pressurization subsystem only). Series pressure regulators and series check valves protect each system against a failure in the open mode. Redundant systems provide protection against closed mode failures. The systems are also protected from overpressurization by a pressure relief valve. The relief valve is protected by a burst disc to reduce the possibility of overboard leakage.

Command Module RCS Tank Configuration and Distribution Subsystem

Design work has progressed on the command module RCS shown in Figure 130. A study has been initiated to investigate means of reducing system weight.

Service Module RCS Tank Configuration and Distribution Subsystem

A decision was made to proceed with a system configuration employing a modular concept shown in Figure 127. This decision was based on preliminary analysis indicating a reliability and weight stand-off when compared to the dual, interconnected system as shown in Figure 128. Definite advantages are gained in the areas of (1) more efficient packaging; (2) ease of assembly, primarily in plumbing system where brazed or welded joints will be used; (3) ease of system testing and qualification testing; (4) ease of maintenance; and (5) minimization of system failures due to system or propellant contamination.

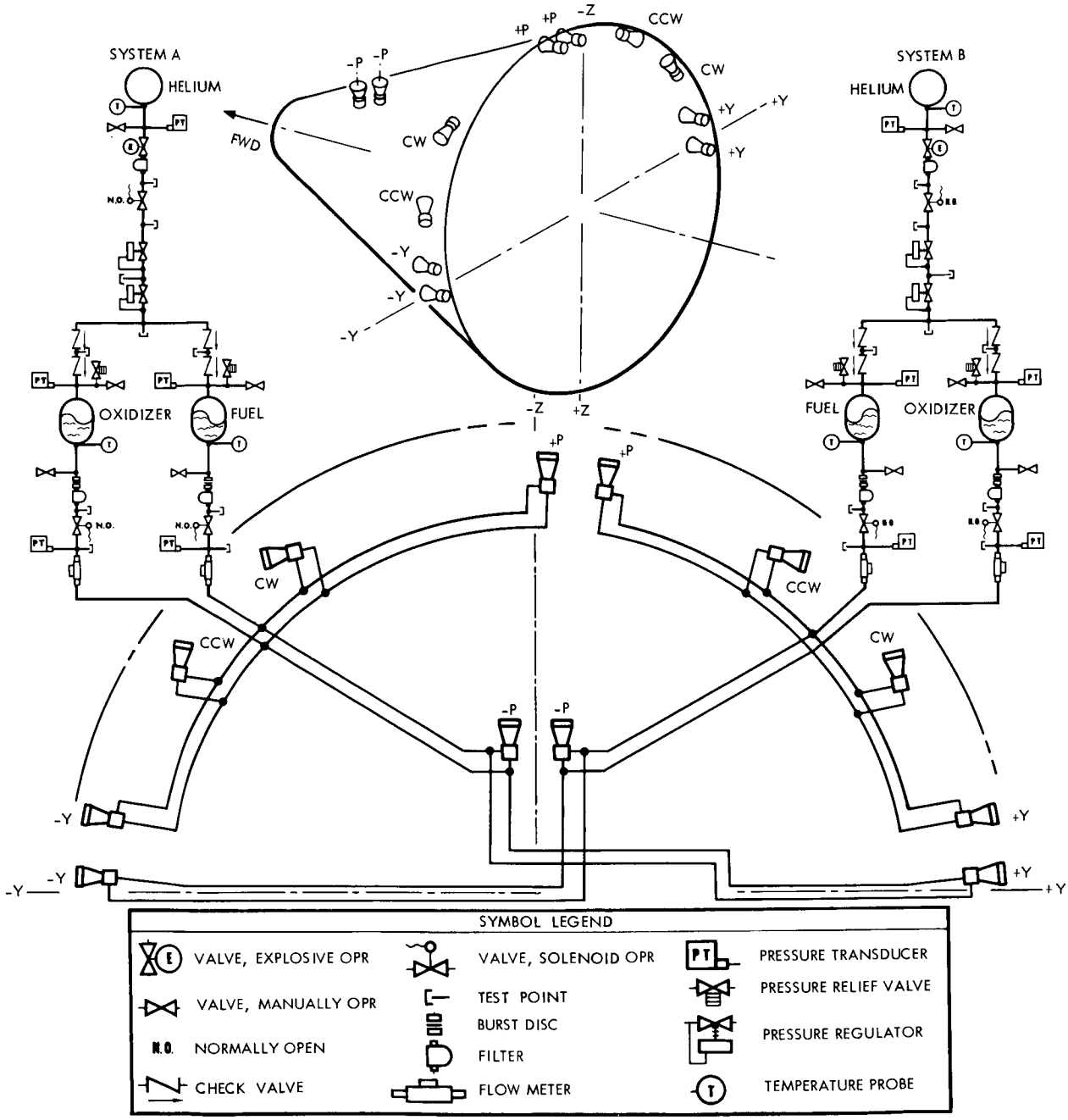

Figure 126. Command Module Reaction Control System—Schematic Diagram

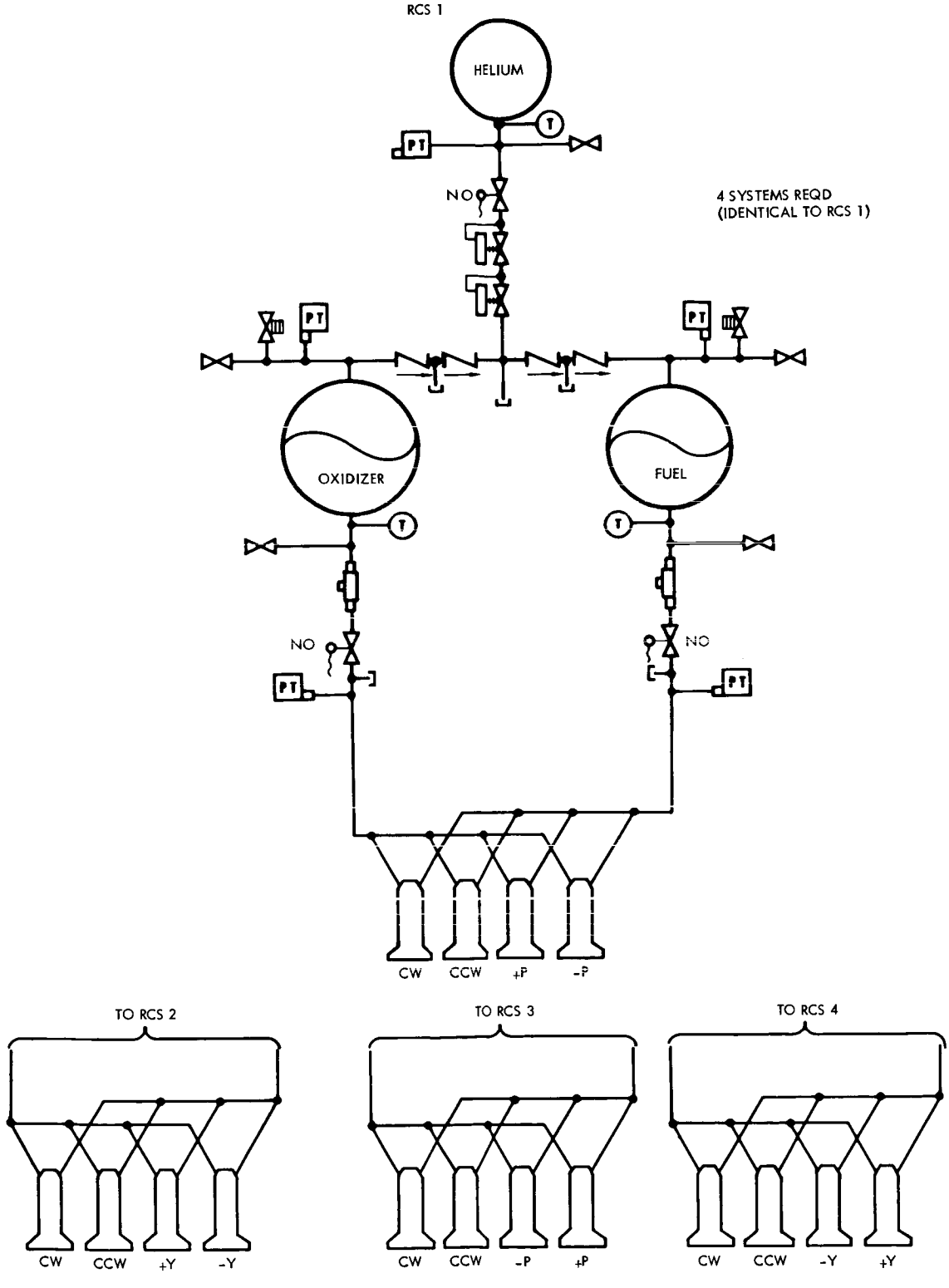

Figure 127. Quadruple Reaction Control System—Positive Expulsion, No Interconnect

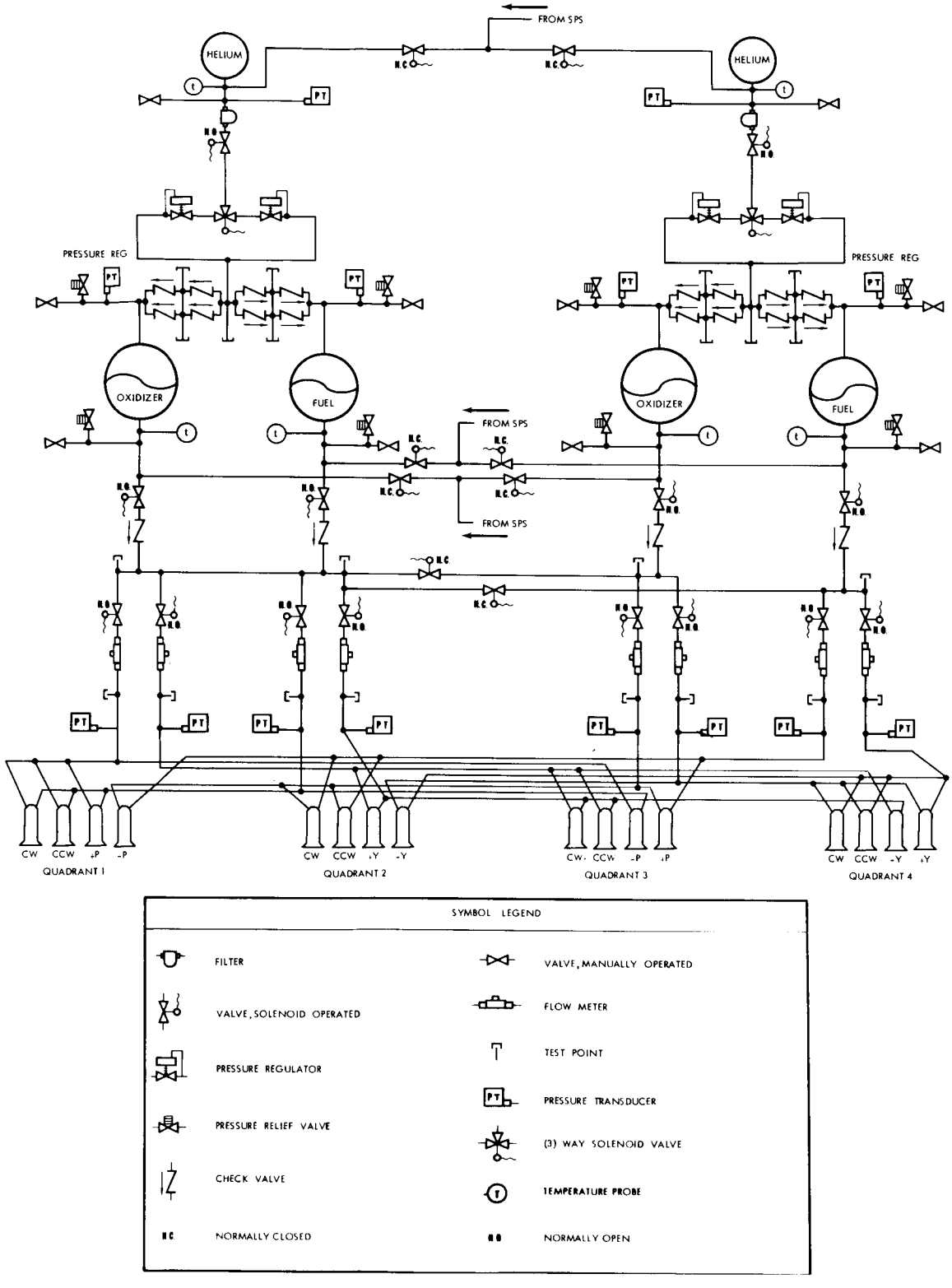

Figure 128. Dual Reaction Control System—Positive Expulsion, Interconnects

Materials and Processes

Seal Evaluation

An evaluation test program for both metallic and nonmetallic seals was initiated in June. The seals will be evaluated under test conditions simulating propellant system fluid exposure, pressure, temperature, shock, and vibration. The variables of flange surface finish and seal compression will be evaluated to determine production tolerances and provide reliability data.

Nonmetallic Materials Compatibility

A test plan was initiated in April to determine the compatibility of nonmetallic materials in nitrogen tetroxide and 50:50 unsymmetrical dimethylhydrazine and hydrazine mixture. Thirty-eight compounded materials have been given fluid exposure. Several halogenated plastic materials have shown essentially no change after nitrogen tetroxide exposure but are considered too stiff for most uses (O-rings, diaphragms, expulsion bladders). Two rubbers, SR634-70 (butyl) and EX-993B-75, have shown significant compatibility with the oxidizer. The EX-993-75 Compound exhibited 11 percent swell and 1000 psi tensile strength after 7 days fluid exposure at 70 F.

A wire-braided Teflon hose assembly exhibited some nitrogen tetroxide permeation during 1-day exposure at 300 psi pressure. Several butyl and ethylene propylene rubber compounds have shown little change after 7-days exposure.

Process Specifications

Preliminary specifications have been released for cleaning of components. Some adjustments in cleaning specification coverage are in progress.

Titanium Compatibility

A laboratory work plan to determine the compatibility of nitrogen tetroxide with TI-6AL-4V was initiated in May. The test plan is designed to determine the effect of various conditions including water content, mill product, surface finish, welding, immersion temperature, and galvanic couple effects. Nitrogen tetroxide and a ABMA-type impact tester have been ordered.

BREADBOARD DEVELOPMENT TESTING

Command Module

Design and fabrication of the command module RCS breadboard test stand continues on schedule. The initial test stand frame was completed in May. Two of the rocket engines have been located in a section of the parachute compartment necessitating the design of additional test stand details. These details have been released for fabrication. The lower half of the reaction control equipment compartment has been designed, fabricated, and assembled to the test stand frame. Design details of the compartment outer wall have been released for fabrication. The complete breadboard fixture is approximately 50 percent completed.

Preparatory steps toward the procurement of phase 1 test components have been initiated. Phase 1 components will be off-the-shelf hardware that will simulate the reaction control flight equipment during initial tests to determine flow and pressure drop characteristics of the system.

Detailed procedures for cleaning and decontamination of components and subsystems were prepared during the reporting period. The procedures cover pretest cleaning and purging, propellant filling, draining of propellants, post-test purging and cleaning, and decontamination.

A training program for test personnel has been initiated. Initial effort has been devoted to the preparation of a training program document which will familiarize test personnel with the properties of the hypergolic propellants and the safety precautions needed to ensure safe test operations.

Preliminary component evaluation test procedures have been prepared. The test procedures will be used during testing of reaction control components prior to installation in the test fixture. The components include regulators, solenoid valves, squib valves, relief valves, burst discs, and filters.

Service Module

Design of the service module RCS breadboard test stand has been initiated and is in progress. A test plan for the breadboard testing of the RCS has been prepared and released.

REACTION CONTROL SYSTEM MOCK-UP

Command Module No. 5

A redundant pressurization and propellant distribution system was installed in the lower equipment compartment with all components, other than

storage tanks, mounted on three panels for each system. A separate panel was used respectively for the pressurization, fuel, and oxidize components for ease of maintenance. All propellant systems equipment proved accessible and compatible with equipment bay structure.

Service Module No. 7

The modular concept of four complete RCS's, each mounted on a removable panel in its respective quadrant on the periphery of the service module, was installed in a simulated panel as a separate display for ease of inspection. Locations of the modules were simulated by installation of the rocket engine on the service module outer surface.

ENGINES

The experimental test phase is approximately 40 percent complete. This is intended to optimize the development solenoid valves, injector system, and combustion chamber configuration. A prototype engine that will fulfill the requirements of the specification control drawings will be provided by the end of September 1962 as a result of this phase.

Solenoid valve studies include evaluation of opening and holding currents (presently guaranteed not to exceed 2 amperes and 200 milliamperes respectively), poppet opening and closing characteristics, pressure drop, and weight reduction. This program is approximately 30 percent complete.

Injector system studies are approximately 45 percent complete. Various configurations are being reviewed (including vortex, six on six, and several doublet injectors) to optimize propellant mixing and distribution through the combustion chamber and to minimize propellant dribble.

The combustion chamber experimental phase is intended to provide the optimum chamber configuration and establish the most reliable material.

The electrical characteristics of the solenoid valves for the reaction control engines have been reviewed with subcontractors. A dual coil arrangement presently being considered uses one coil to actuate the solenoid valve and the other to hold the valve open. Use of a third coil for manual control of the valve has also been discussed but has not yet been implemented.

The reaction control engines of the command module have been relocated to the leeward side of the module to reduce the effects of reentry heating. The location of each engine in this configuration is illustrated in Figure 129.

Reentry heating rates at each of the relocated engine positions were defined for use in evaluating the effects of the reentry environment on the

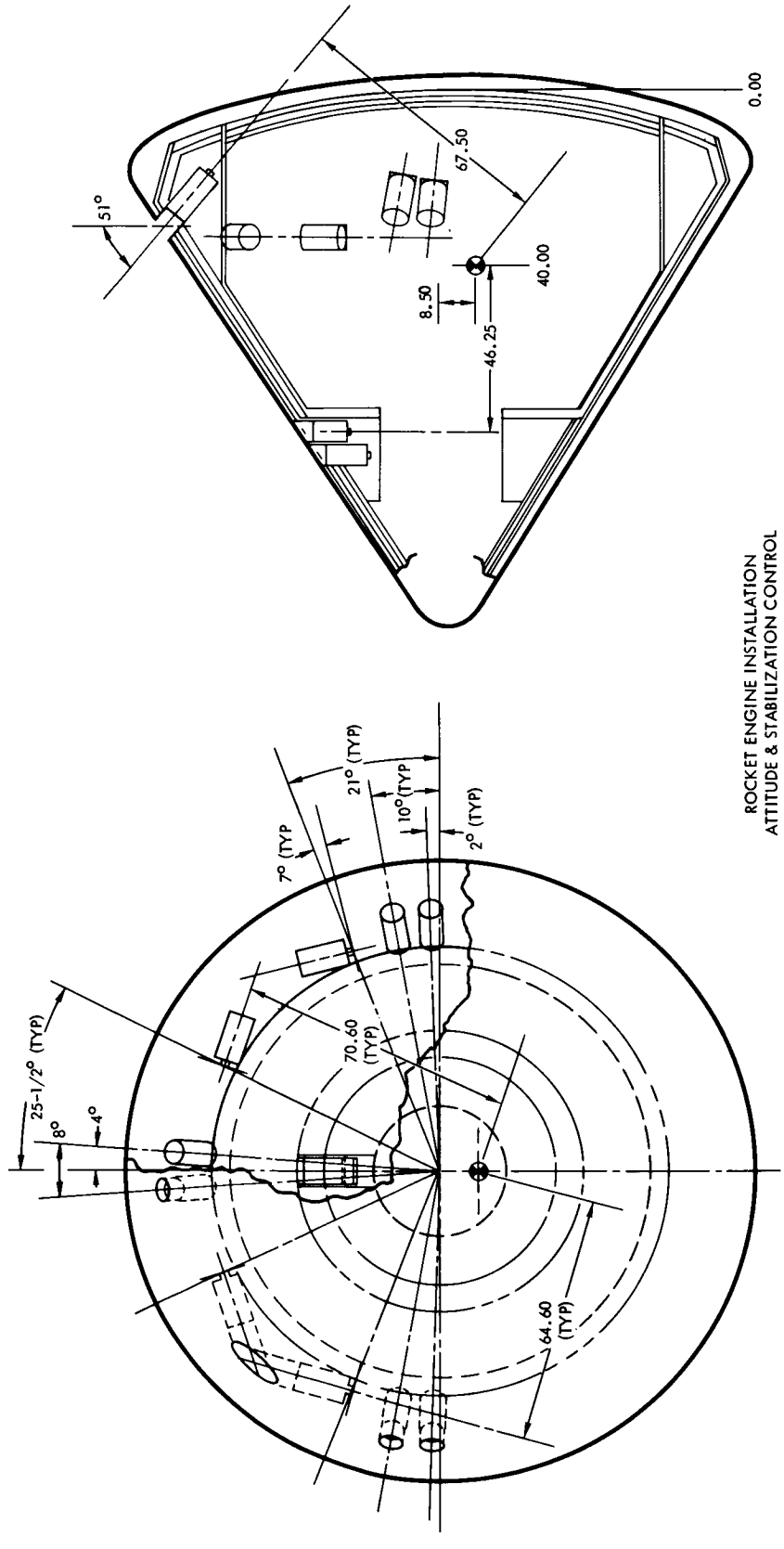

Figure 129. Rocket Engine Installation—Attitude and Stabilization Control

engines. The most severe condition was determined to occur at the yaw engine location with resultant heating rates as illustrated in Figure 130.

Using the reentry heating rates of Figure 131, an analysis has been conducted to determine the effects of reentry heating on the yaw engine. This analysis has indicated that the reentry heat flux applied to the rocket engine downstream of the nozzle throat during periods of nonoperation will raise the temperature of the static fuel within the chamber cooling coils to a level beyond that considered safe for the 50:50 mixture of hydrazine and unsymmetrical dimethylhydrazine presently used as fuel. This condition exists at several engine locations on the command module and cannot be alleviated by further engine relocation if suitable attitude control is to be retained in all three axes.

Various means of reducing the peak fuel temperature level within the chamber cooling coils during the reentry maneuver have been evaluated. Methods that have been considered include the flow of a cooling medium (water, helium, or fuel), circulation of fluid through the coils during nonoperation, periodic engine operation, use of water jackets, and other methods. However, each of these methods present some unacceptable compromise with respect to size, weight, complexity, reliability, or crew surveillance.

Consideration is being given to the use of an ablative combustion chamber or an alternate design that employs the present combustion chamber cooling principle in combination with an ablative exhaust nozzle. A computer program is being conducted to determine the effects of reentry heating on the composite design.

The present locations of the reaction control engines on the service module are being reviewed to determine the potential effects of the rocket exhaust on the fuel cell and ECS radiators with respect to heating rates, erosion, and exhaust gas deposits. Alternate locations are being investigated to enable total isolation of the rocket exhaust pattern from the radiator locations.

Prediction of the rocket exhaust effects on the radiators has been limited to some degree by a lack of information on the exhaust pattern under hard-vacuum conditions. A test program has been formulated to determine heating rates, pressure distribution, and shock wave impingement characteristics using Arnold Engineering Development Center (AEDC) high-altitude facilities. The test program was reviewed with NASA and AEDC personnel on 1 June. Detail formulation of the proposed program is in progress.

Drawings of command module mock-up 5 and service module mock-up 7 were completed during this period, and the mock-ups were built accordingly.

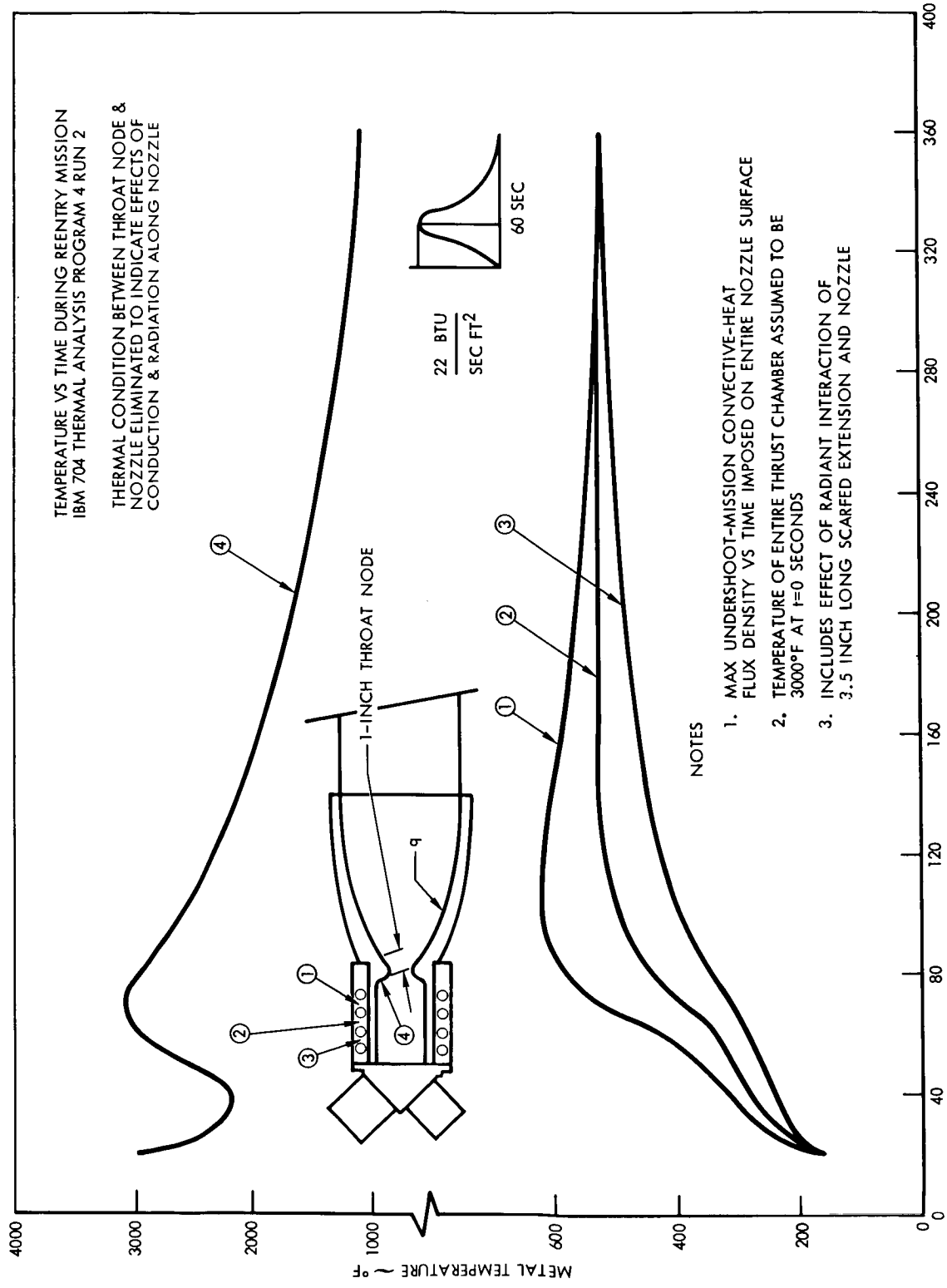

Figure 130. Semiradiation-Cooled Engine

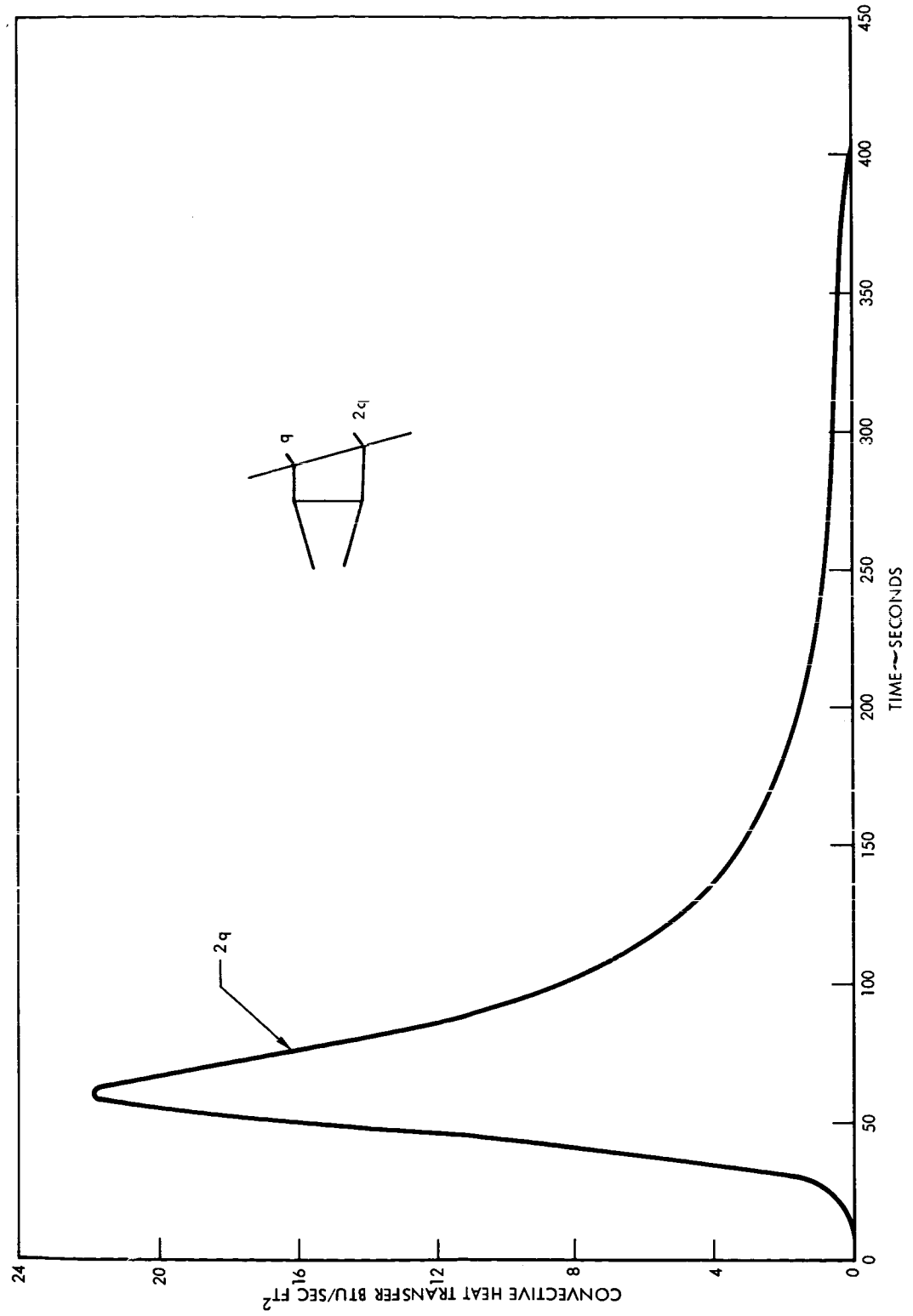

Figure 131. Reentry Convective Heat Transfer

A design review was held on 18 June, and suggested corrective measures are being reviewed for immediate inclusion in engine designs.

Boilerplate layout drawings of the command and service module reaction control engine installations are 60 percent and 35 percent complete.

Evaluations of Teflon flexible hoses were conducted and conclusions were that Teflon is permeable to nitrous tetroxide. A decision was made to use metal flexible lines where flexible systems are required.

A literature search has been conducted to determine whether liquid substances were available that could be substituted directly for nitrous tetroxide and Aerozine 50 in the Apollo RCS breadboard testing. The survey covered both inorganic and organic fluids. From the approximately 2400 liquids surveyed, none was found that fulfilled the requirements of having density and viscosity the same as the propellants and being nonflammable, nontoxic, readily purged from the system, compatible, and without insoluble residues. Water, although possessing neither the same density nor viscosity, has been suggested for usage.

An interim test area has been requested for RCS hydrostatic, gaseous nitrogen, and water flow testing required in phase 1 of the reaction control development program. This interim test area will provide a means for meeting the initial test phase of the critical Apollo RCS schedule while construction of the permanent facility is in progress.

During component evaluation and reaction control breadboard development testing, cleanliness of the components and subsystems will assure accurate evaluation; therefore, a cleaning and decontamination procedure was prepared during the reporting period. This procedure covers the pretest cleaning and purging, propellant filling, draining of propellants, post-test purge and cleaning, and decontamination of the development command module breadboard.

Familiarization of laboratories testing personnel with the Apollo reaction control fuel and oxidizer propellants will be accomplished by use of the "Apollo Propellant System Propellant Handling Personnel Training Program." This document was prepared by the laboratory and was published during the reporting period.

Receipt of off-the-shelf Phase 1 test components will be functionally tested using either water or gaseous nitrogen as applicable. The functionally acceptable system module and command module propellant components will then be installed on the respective breadboards, fabrication of which will be completed during the period. Procurement of the essential components, parts, materials, and special test equipment is planned for the next period.

GROUND OPERATIONAL SUPPORT SYSTEM

DOCUMENTATION

Preliminary Performance and Interface Specification, Ground Operational Support System (GOSS) Equipment, Project Apollo Spacecraft, SID 62-77, was submitted to NASA on 2 May 1962 and provides the preliminary performance requirements of the equipment necessary in the GOSS. This specification supports and supplements the GOSS performance specification, SID 62-76, in the identification of stations, facilities and equipment; the establishment of requirements for integration of all network elements and their functional relationships; the specification of interface requirements within the GOSS network; and the compatibility between the spacecraft and the GOSS network.

Preliminary Performance and Interface Specification, Ground Operational Support System (GOSS), Project Apollo Spacecraft, SID 62-76, is being revised for submission to NASA on 15 July 1962.

Engineering assistance was provided to the S&ID Apollo Program Control in the preparation of a PERT chart. This chart presents management-level tasks for the S&ID GOSS effort and has been submitted to NASA.

OPERATIONS ANALYSIS EFFORT

Effort has been applied to breaking down mission events and operations into spacecraft electronic systems functions and work cycles. From this breakdown, the contribution of each subdivision to the overall spacecraft and ground information flow is more readily determined. The data rates, quantities, and other characteristics can then be evaluated in their proper time relationship and thus provide an orderly basis for the determination of the ground station information flow and the station operational concept.

Effort has been expended on the requirements for displays and indicators within the remote station and mission control center as a function of spacecraft systems operations and crew member activities.

The selection of station locations to satisfy the established ground rules concerning contact with the spacecraft and landing from earth orbit or lunar missions is being given consideration. A set of stations that satisfy all logistic, political, and operational considerations has been established.

These locations must be tested by an existing computer program to evaluate acceptability in permitting landing from any orbit within the maneuver capabilities of the spacecraft.

GOSS LABORATORY

Requirements for the GOSS laboratory are being established. The prime purpose of the laboratory will be to assure spacecraft-GOSS compatibility through appropriate testing of the equipments and subsystems involved.

REFLECTIVITY STUDY

Preliminary effort has been planned for a reflectivity study to determine the radar reflection characteristics of the Apollo configurations. This study will provide data to enable evaluation of radar skin-tracking for the following situations:

1. Skin-tracking of the spacecraft in the event of loss of beacon operation.

2. Skin-tracking of the capsule during reentry blackout. (This phase must be correlated with the S&ID reentry blackout study.)

3. Skin-tracking by radars other than the GOSS radars, (i.e., by experimental, commercial, or military equipment either during lunar or earth-orbital missions or during reentry and recovery operations).

Feasibility of skin-tracking as the primary tracking mode with the attendant simplification of on-board equipment will be determined. The study may also suggest a means for increasing the radar cross section of the spacecraft to improve skin-tracking.

APPENDIX

COMMAND MODULE MOCK-UP PHOTOGRAPHS

[redacted]

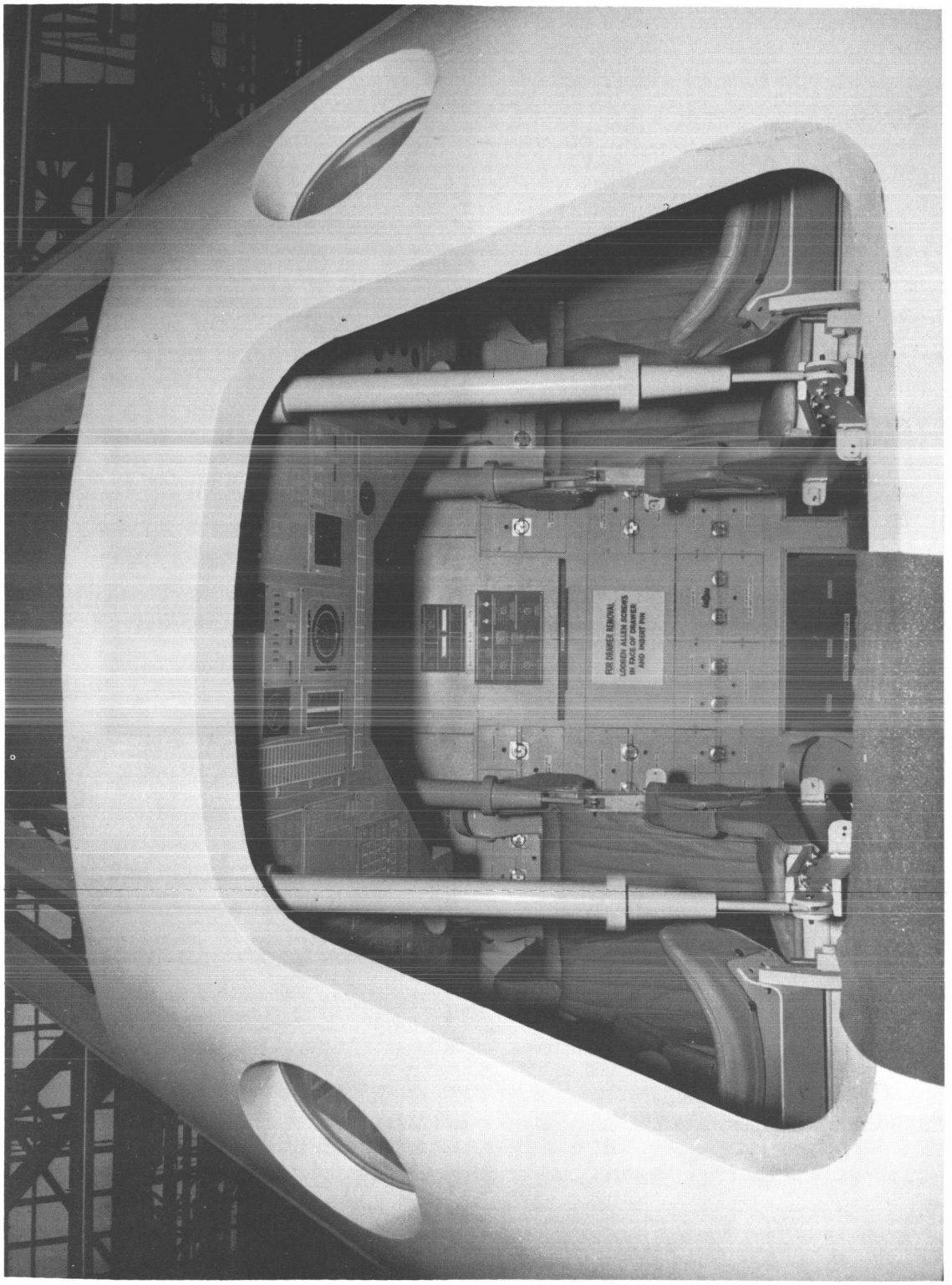
FOR DRAWER REMOVAL
LOOSEN ALLEN SCREWS
IN FACE OF DRAWER
AND INSERT PIN

7005-04-73 BB

CONFIDENTIAL

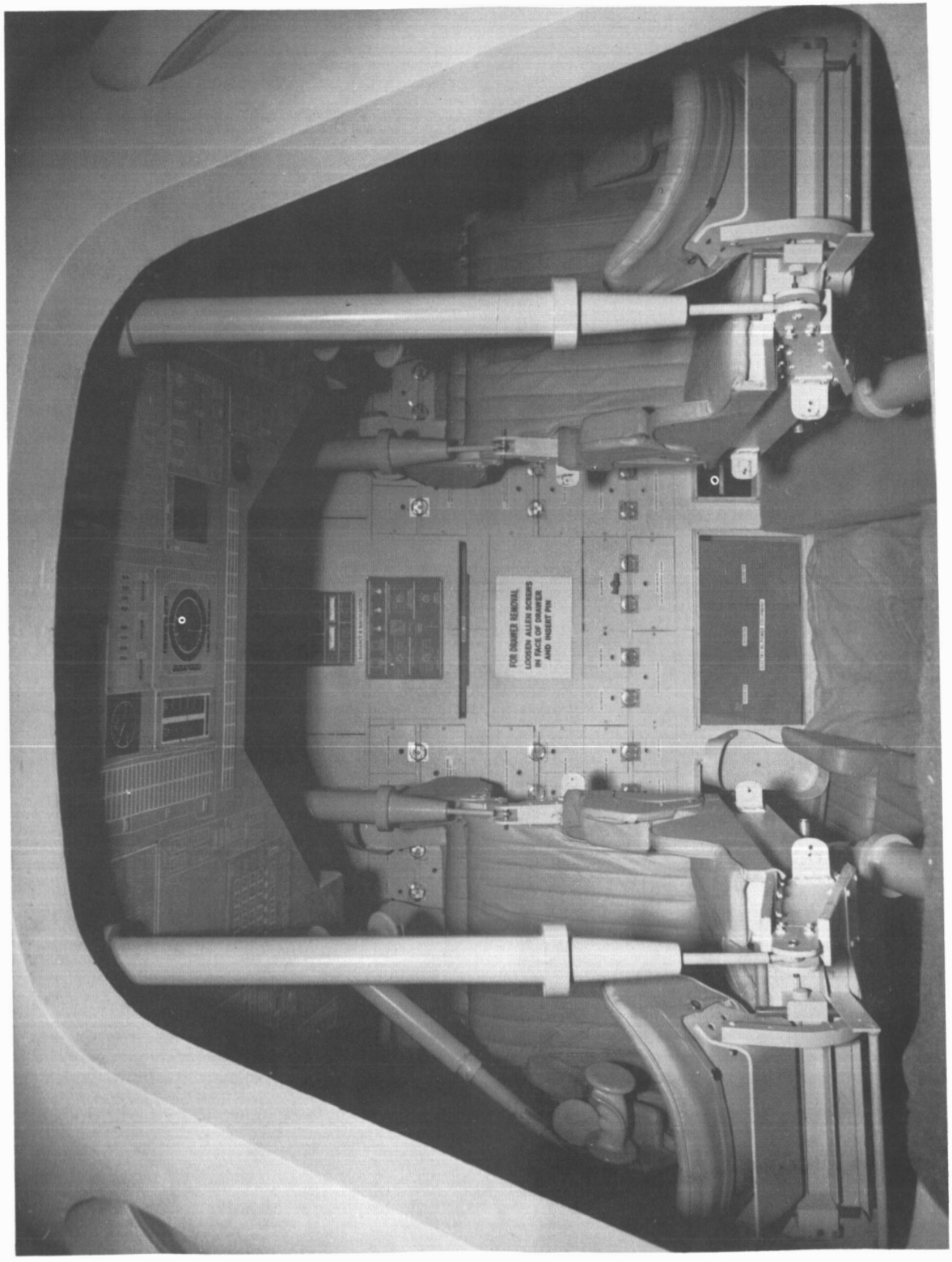

7005-04-73 CC

CONFIDENTIAL

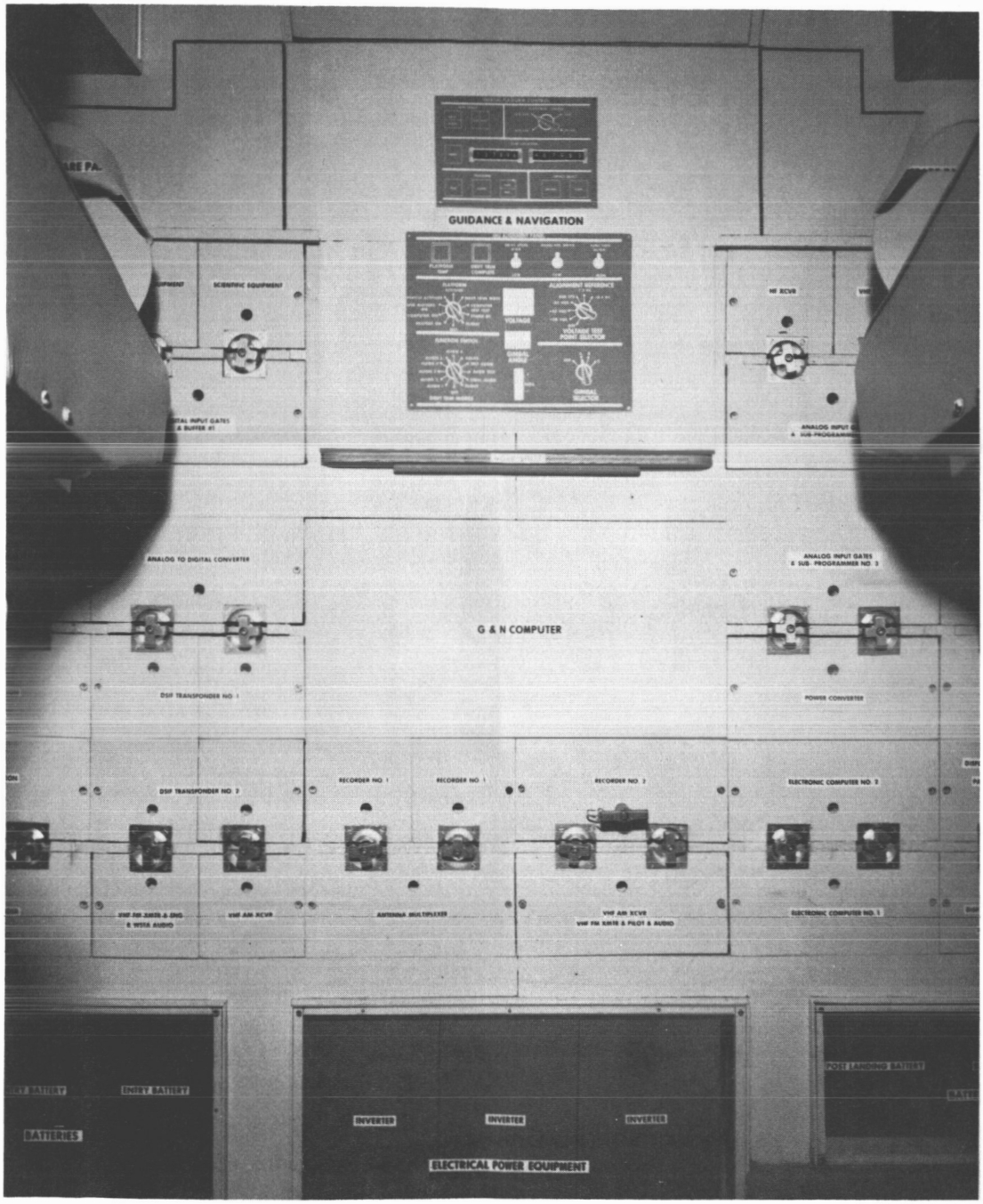

7005-04-73 DD

CONFIDENTIAL

CONFIDENTIAL

7005-04-73 EE

CONFIDENTIAL

CONFIDENTIAL

7005-04-73 FF

CONFIDENTIAL

CONFIDENTIAL

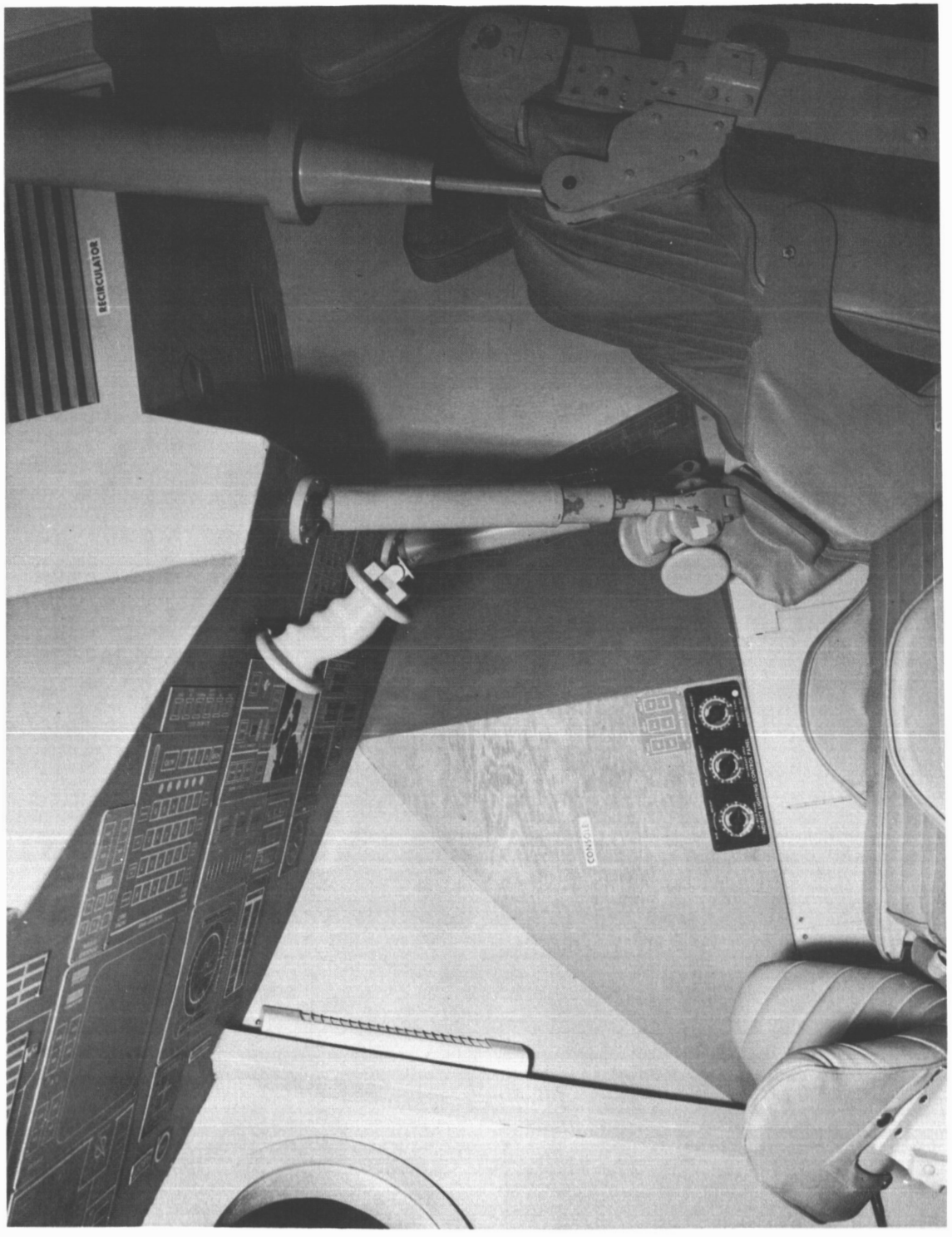

7005-04-73 GG

CONFIDENTIAL

CONFIDENTIAL

7005-04-73 HH

7005-04-66 A

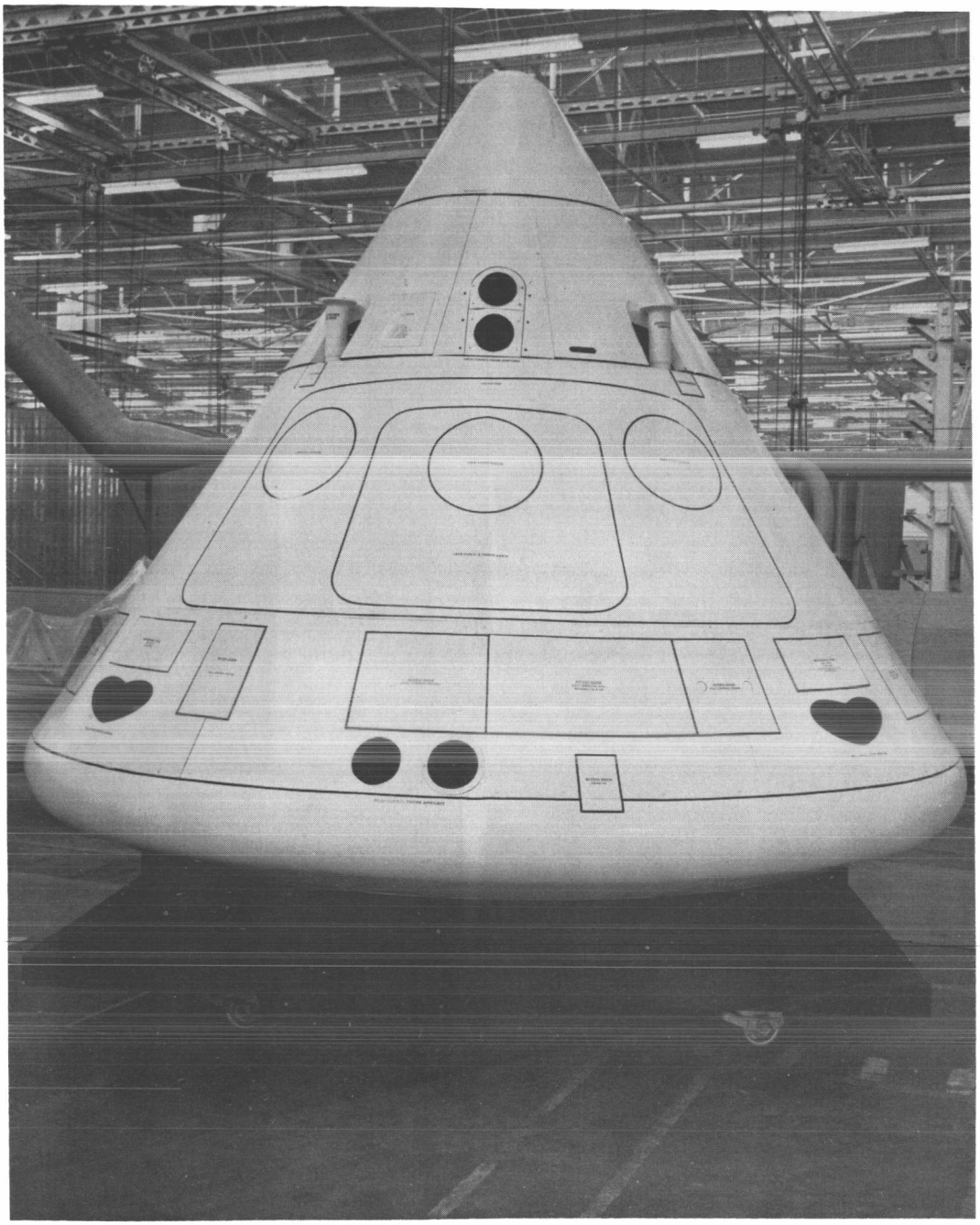

7005-04-66 B

CONFIDENTIAL

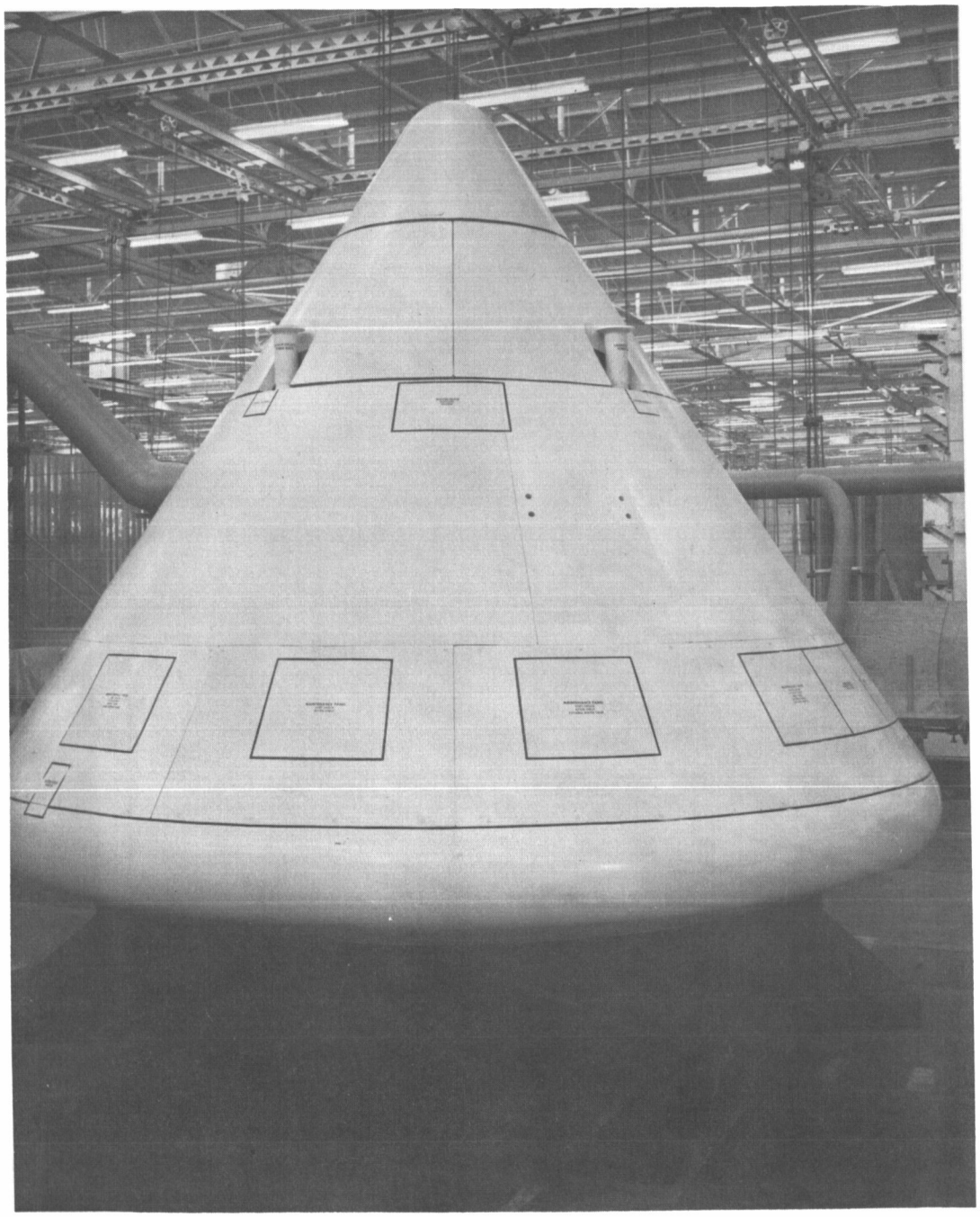

7005-04-66 C

CONFIDENTIAL

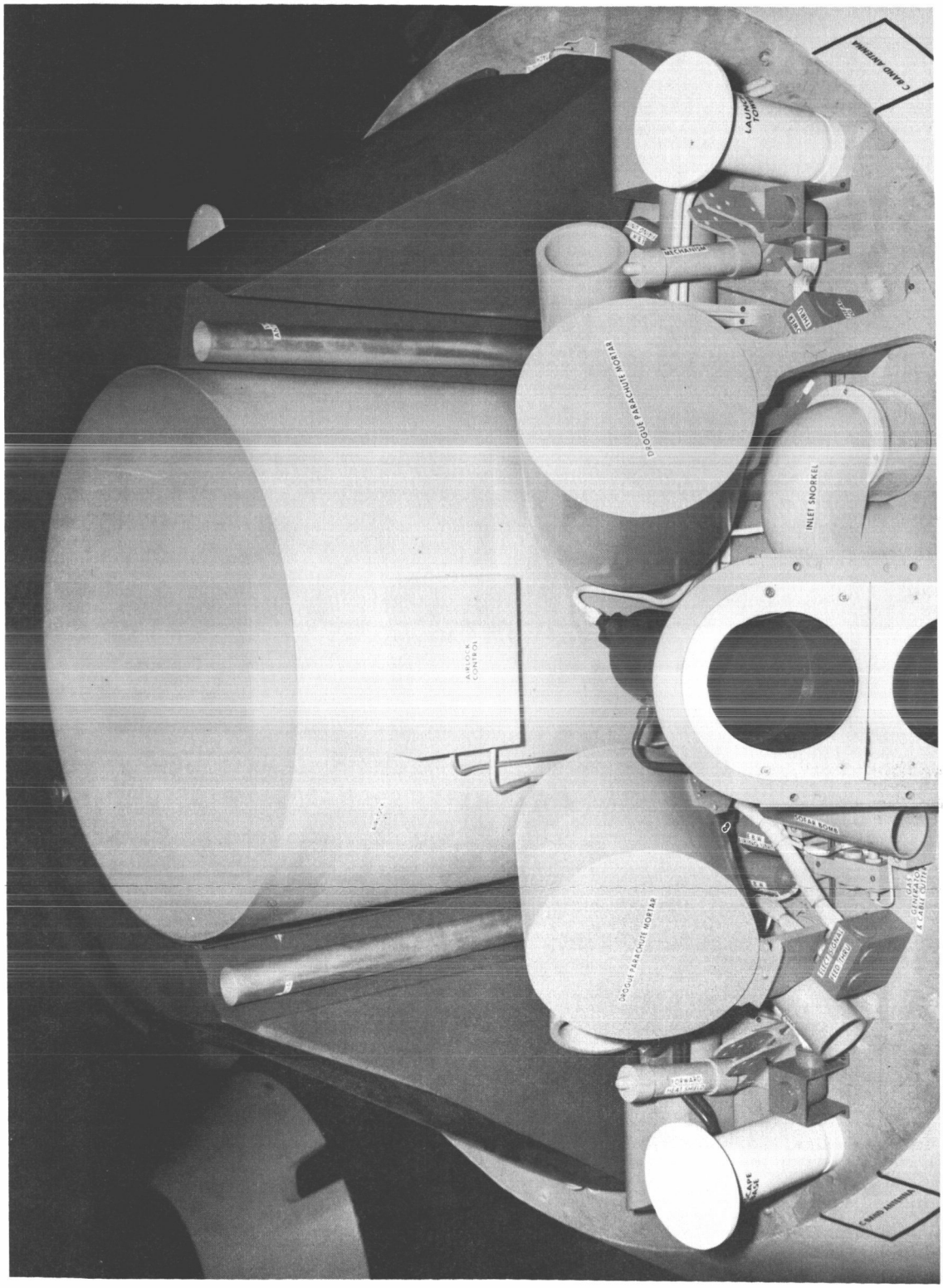

7005-04-66 E

CONFIDENTIAL

CONFIDENTIAL

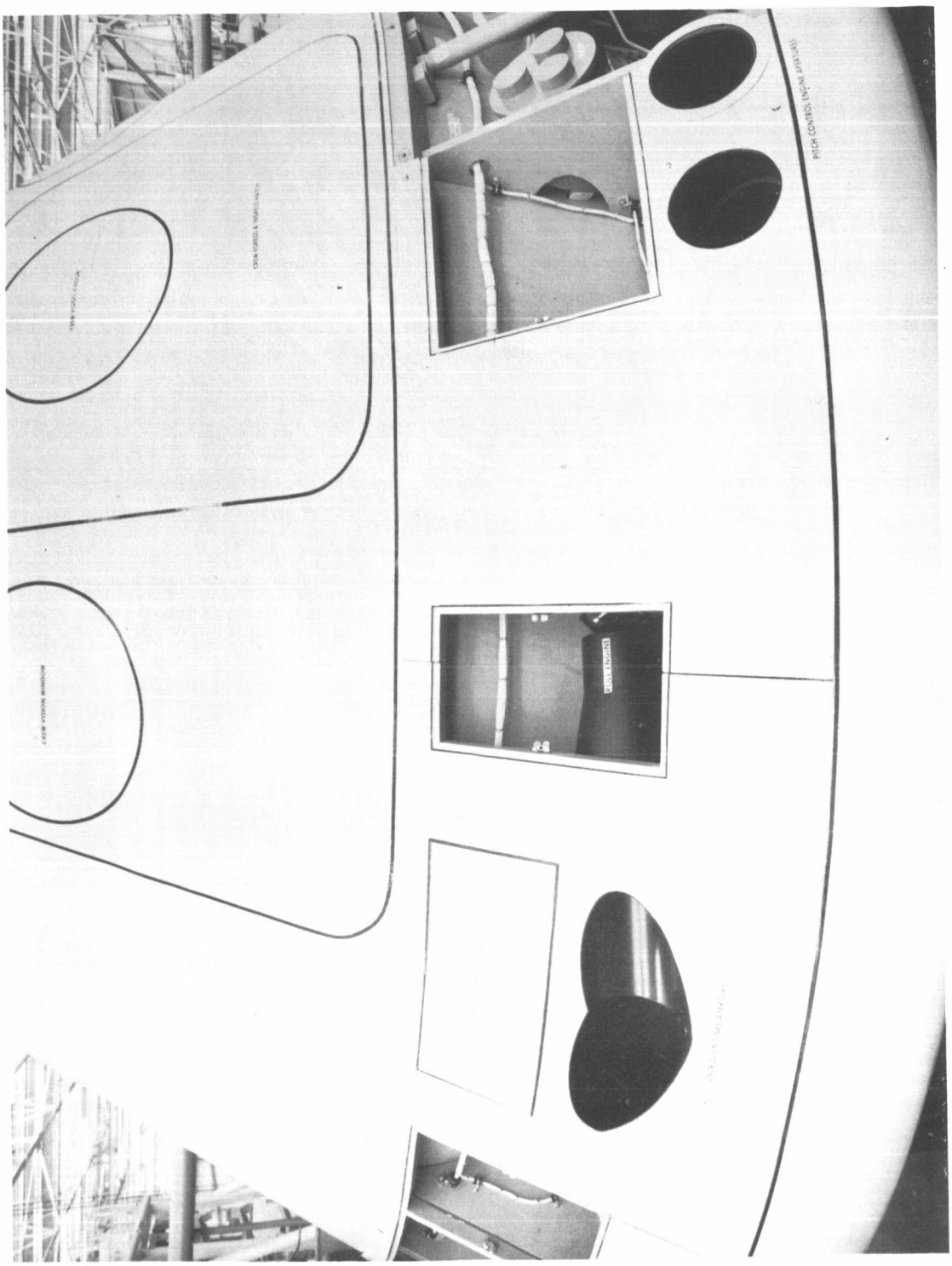

7005-04-66 D

CONFIDENTIAL

7005-04-66 F

CONFIDENTIAL

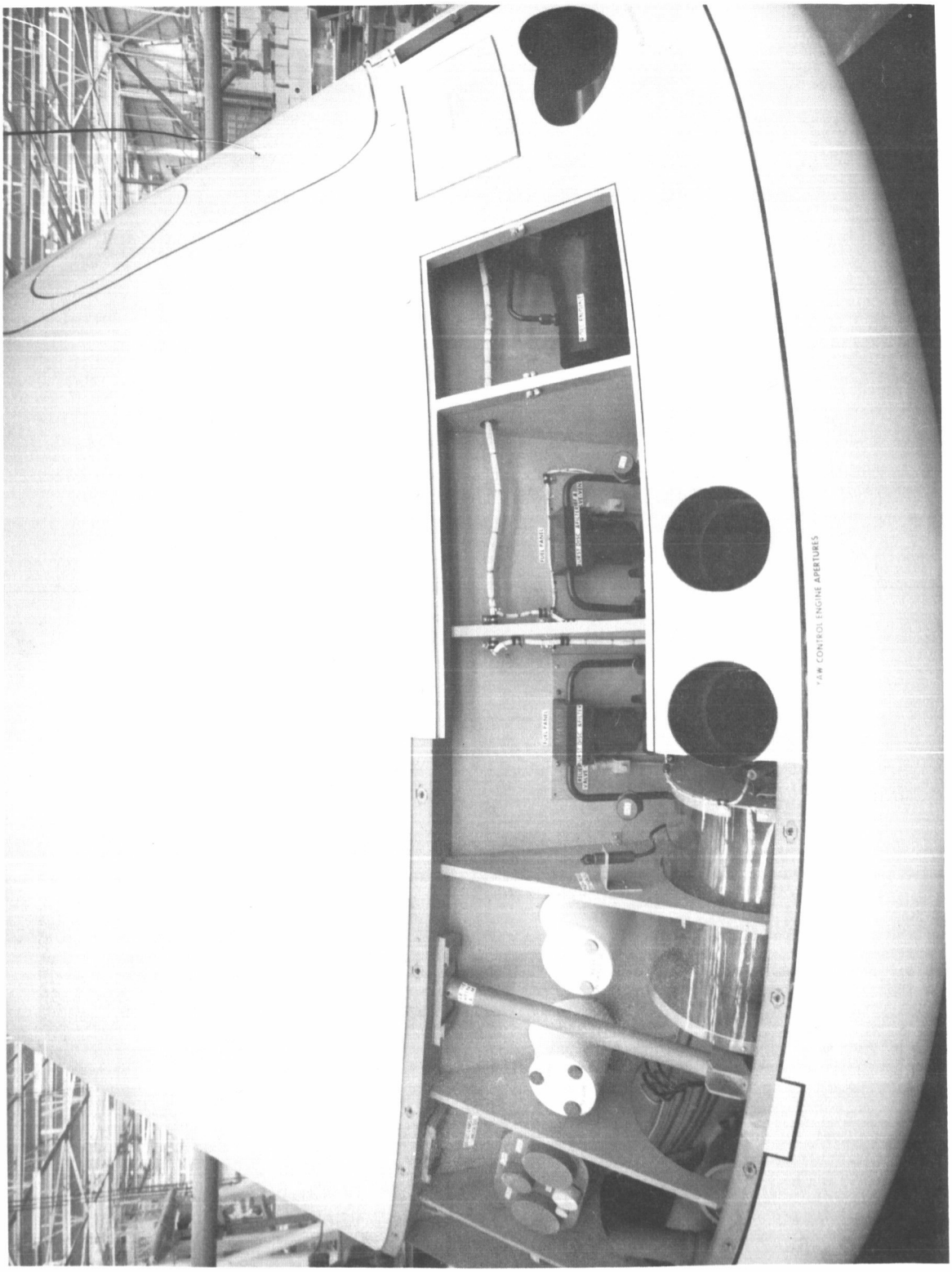

7005-04-66 G

CONFIDENTIAL

CONFIDENTIAL

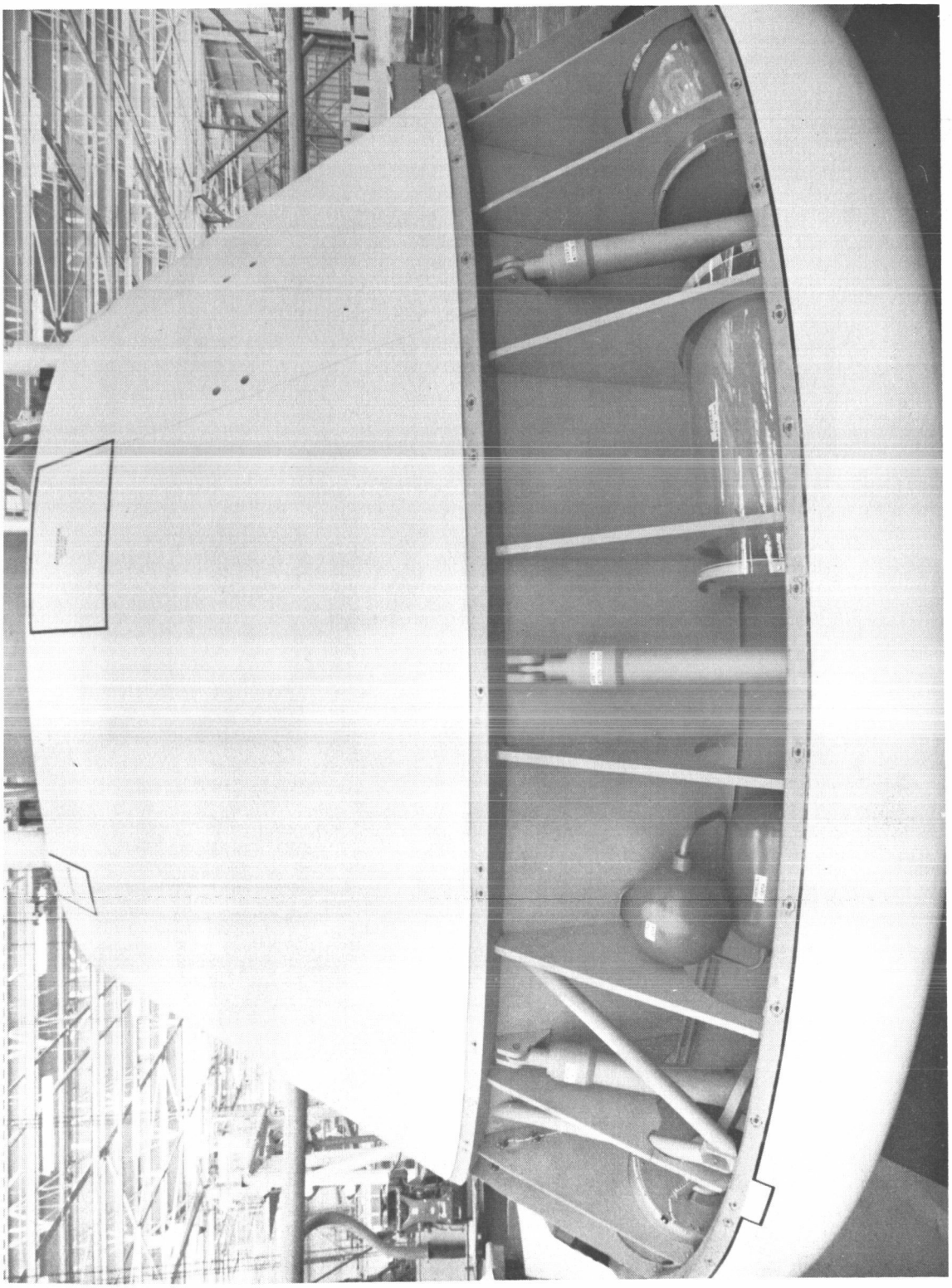

7005-04-66 H

CONFIDENTIAL

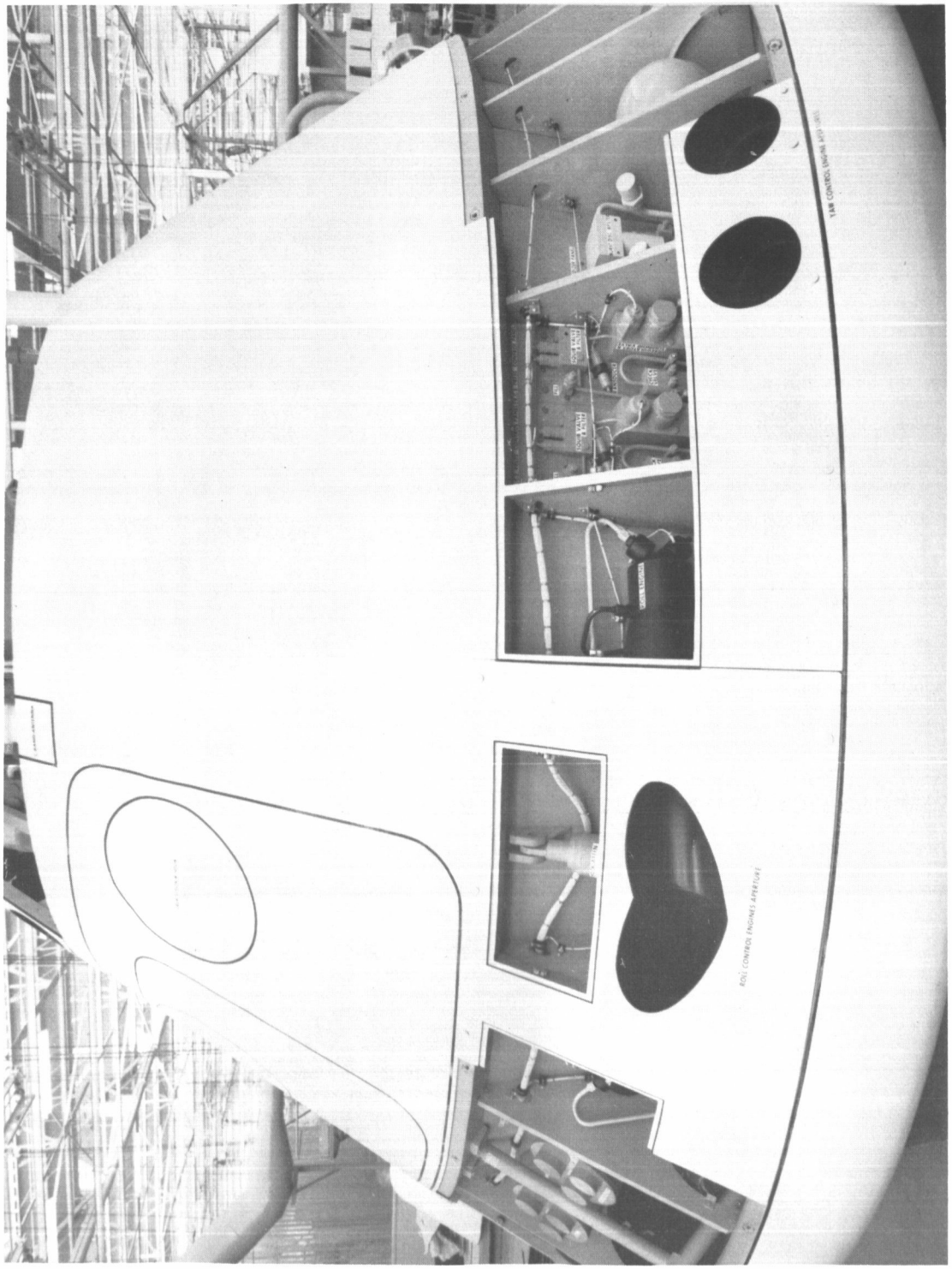

7005-04-66 1

CONFIDENTIAL

CONFIDENTIAL

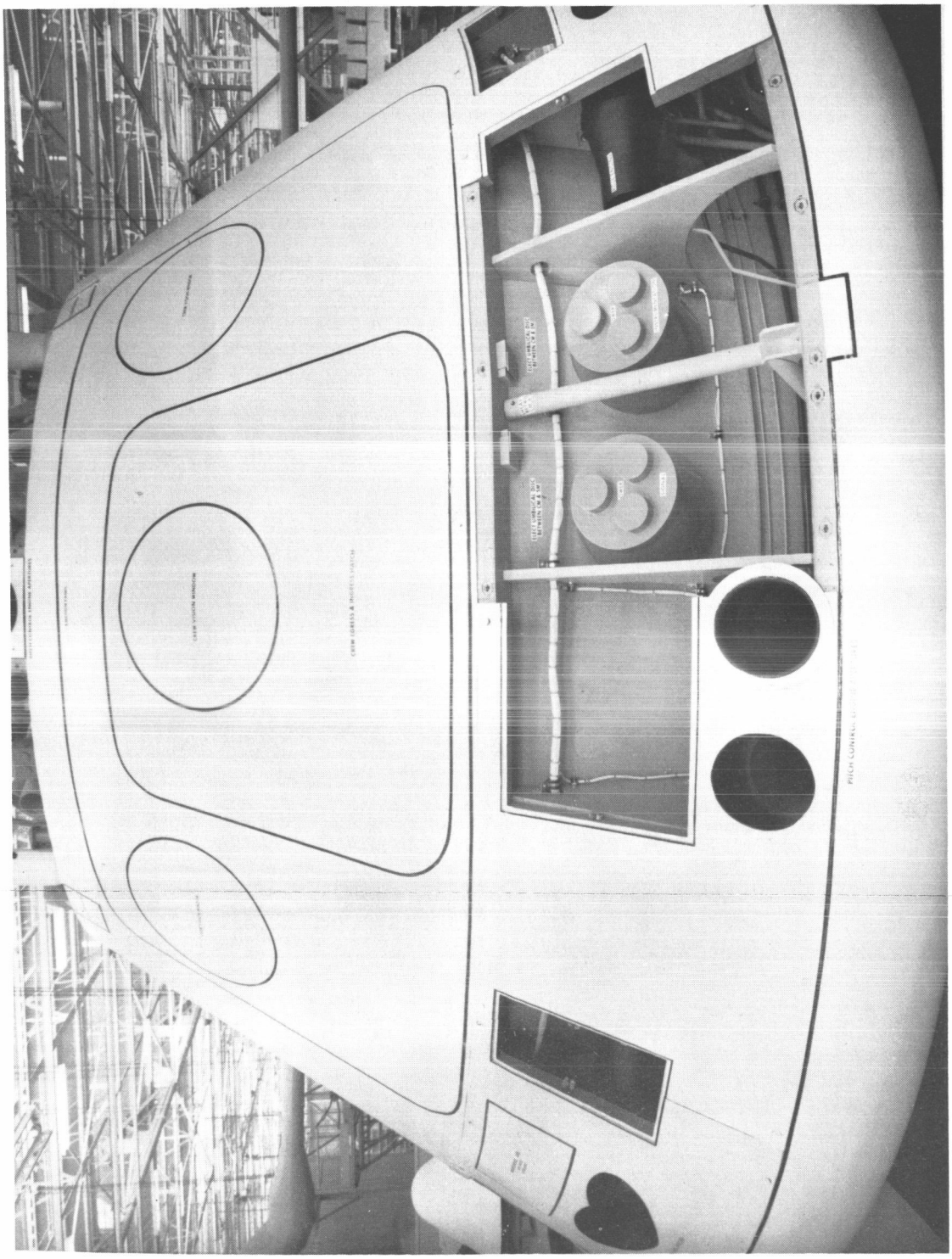

7005-04-66 J

CONFIDENTIAL

CONFIDENTIAL

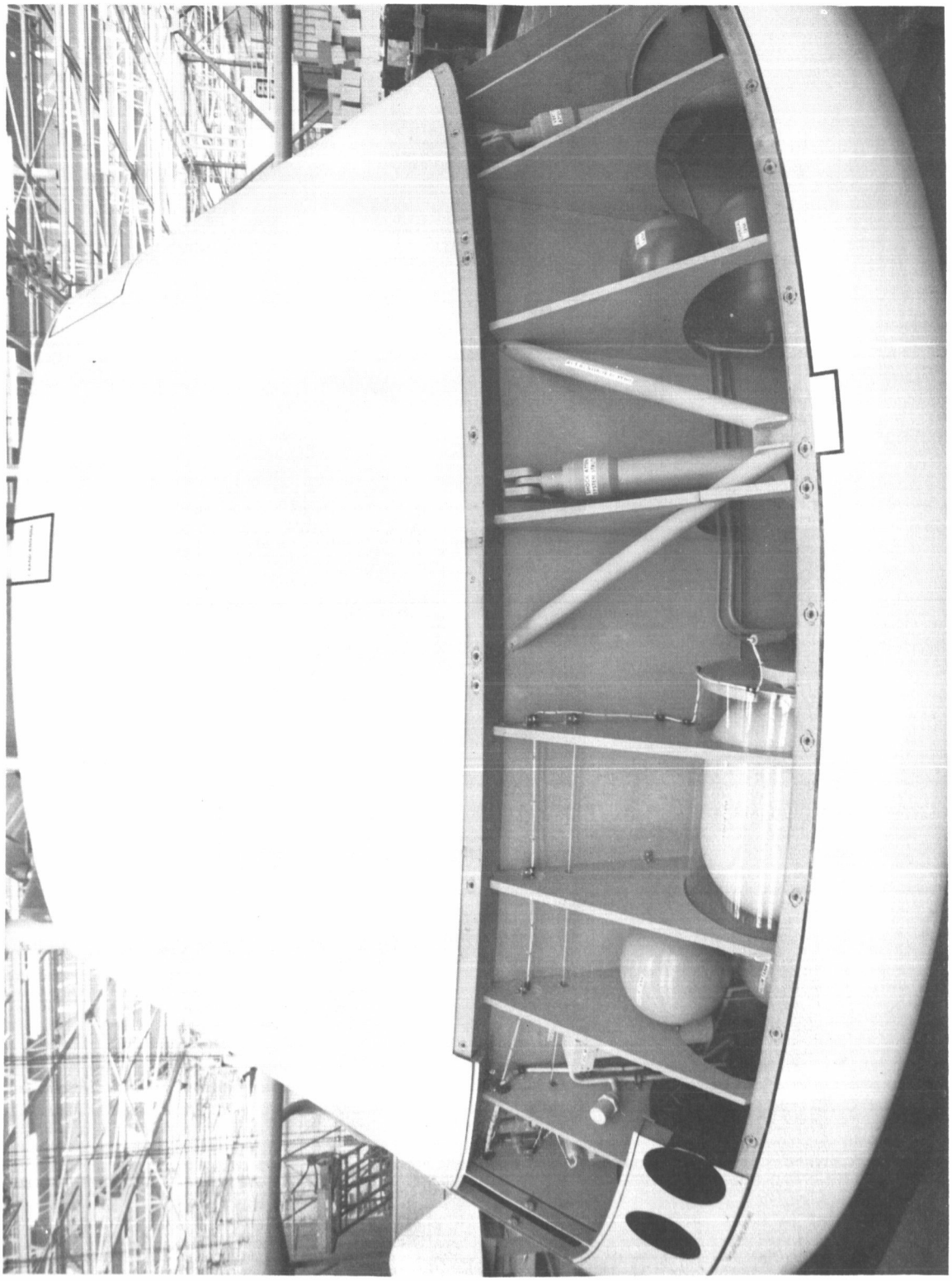

7003-04-66 K

CONFIDENTIAL

CONFIDENTIAL

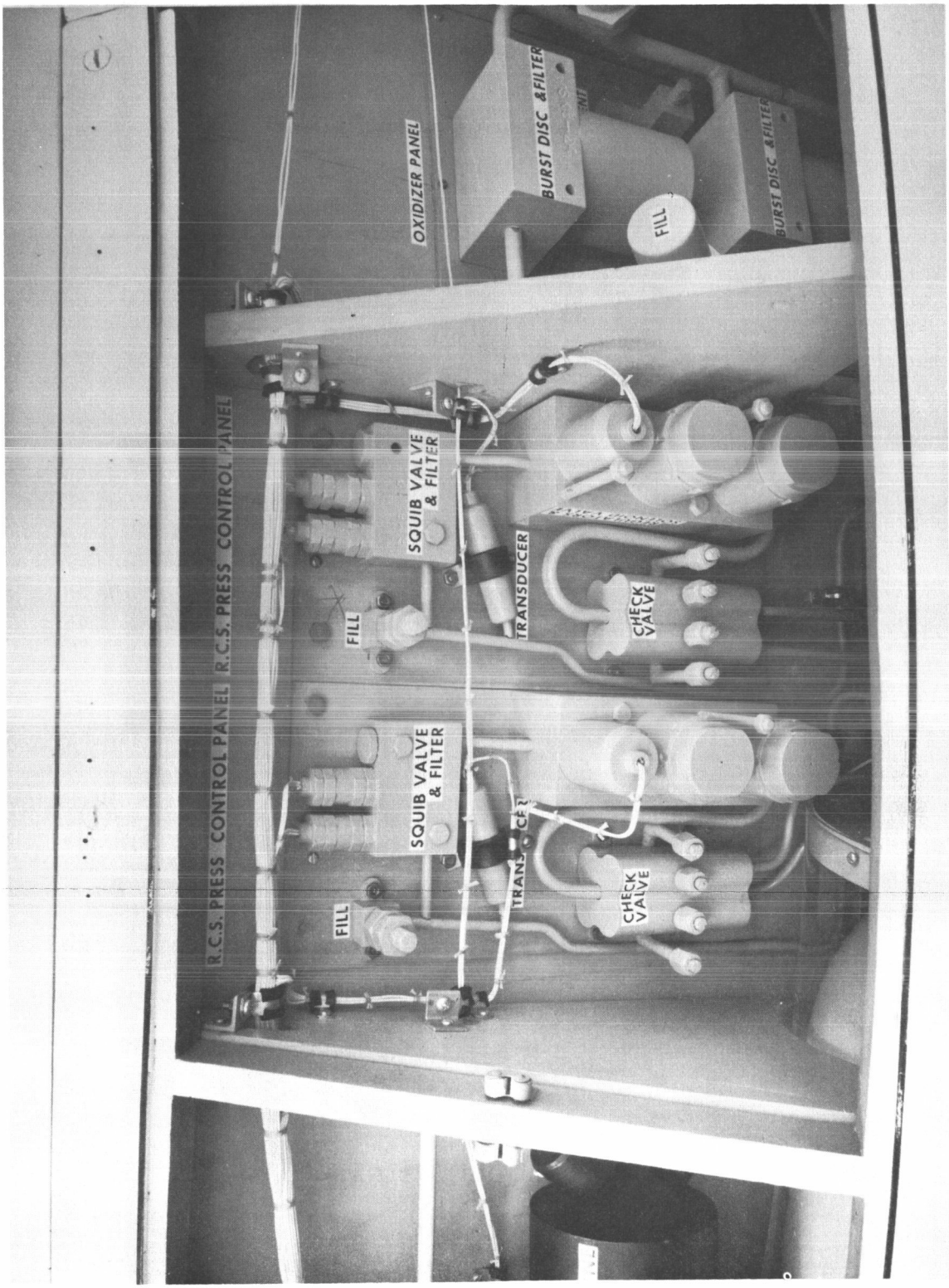

7005-04-66 L

CONFIDENTIAL

CONFIDENTIAL

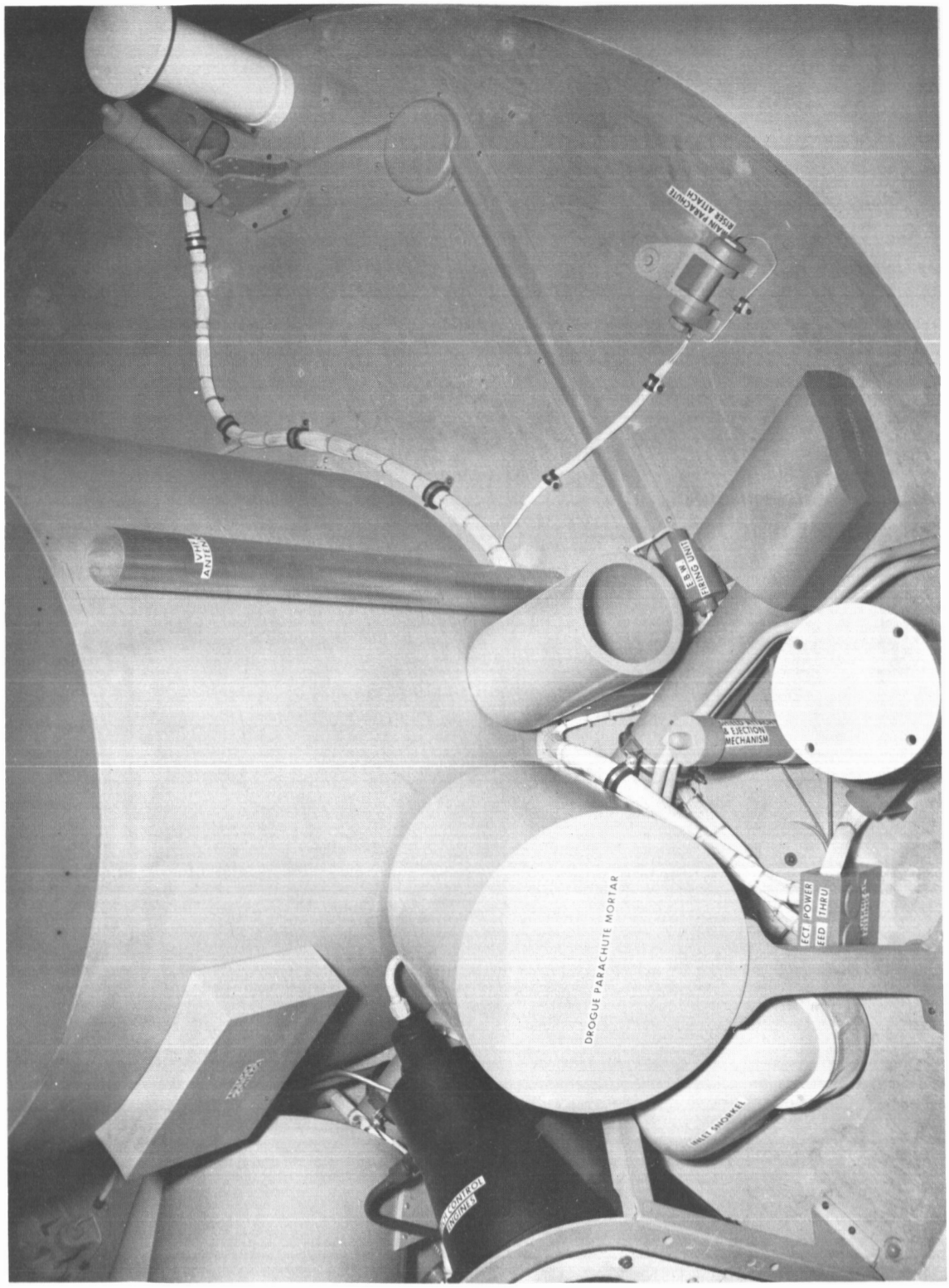

7005-04-66 M

CONFIDENTIAL

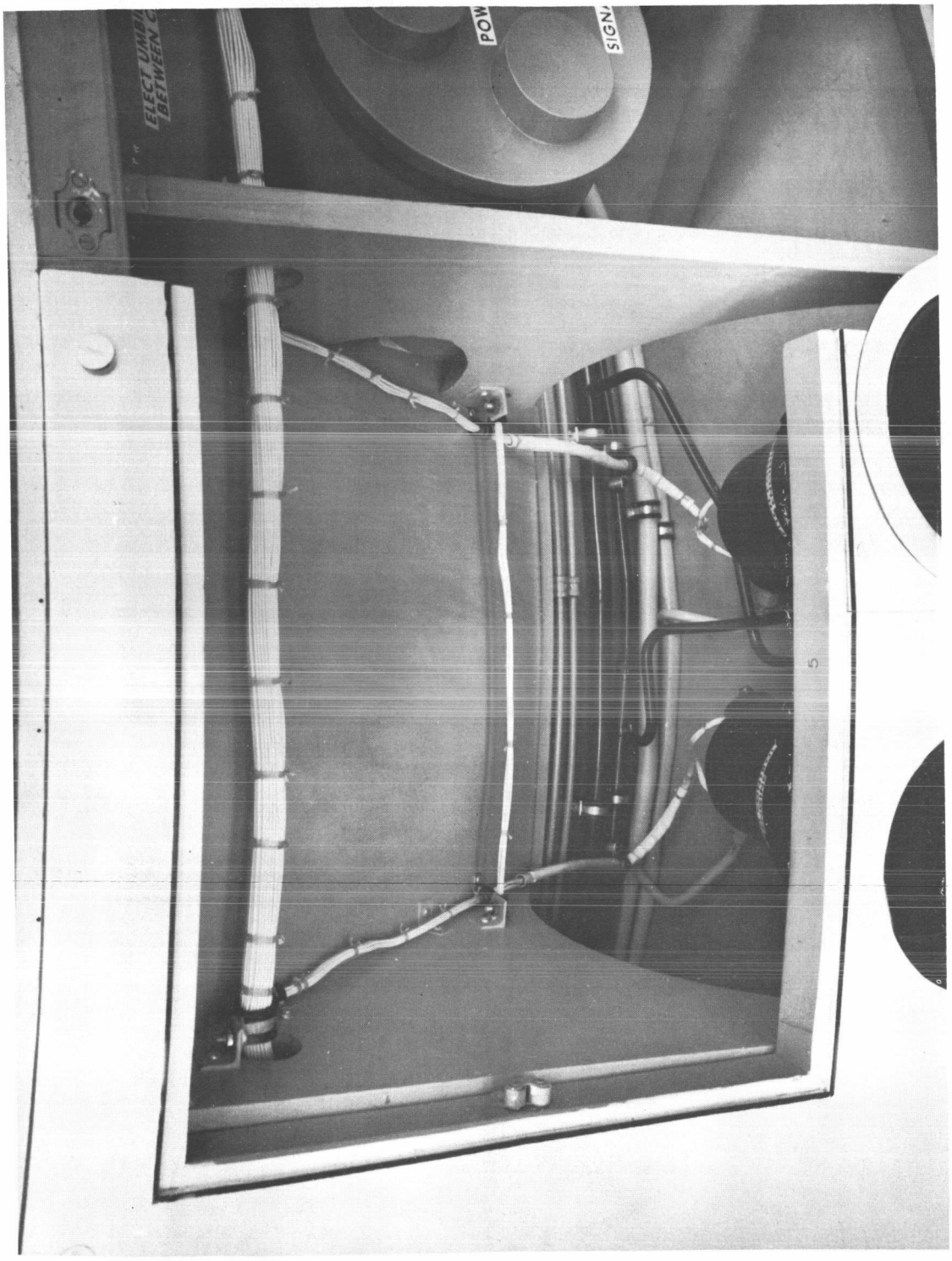

7005-04-66 N

CONFIDENTIAL

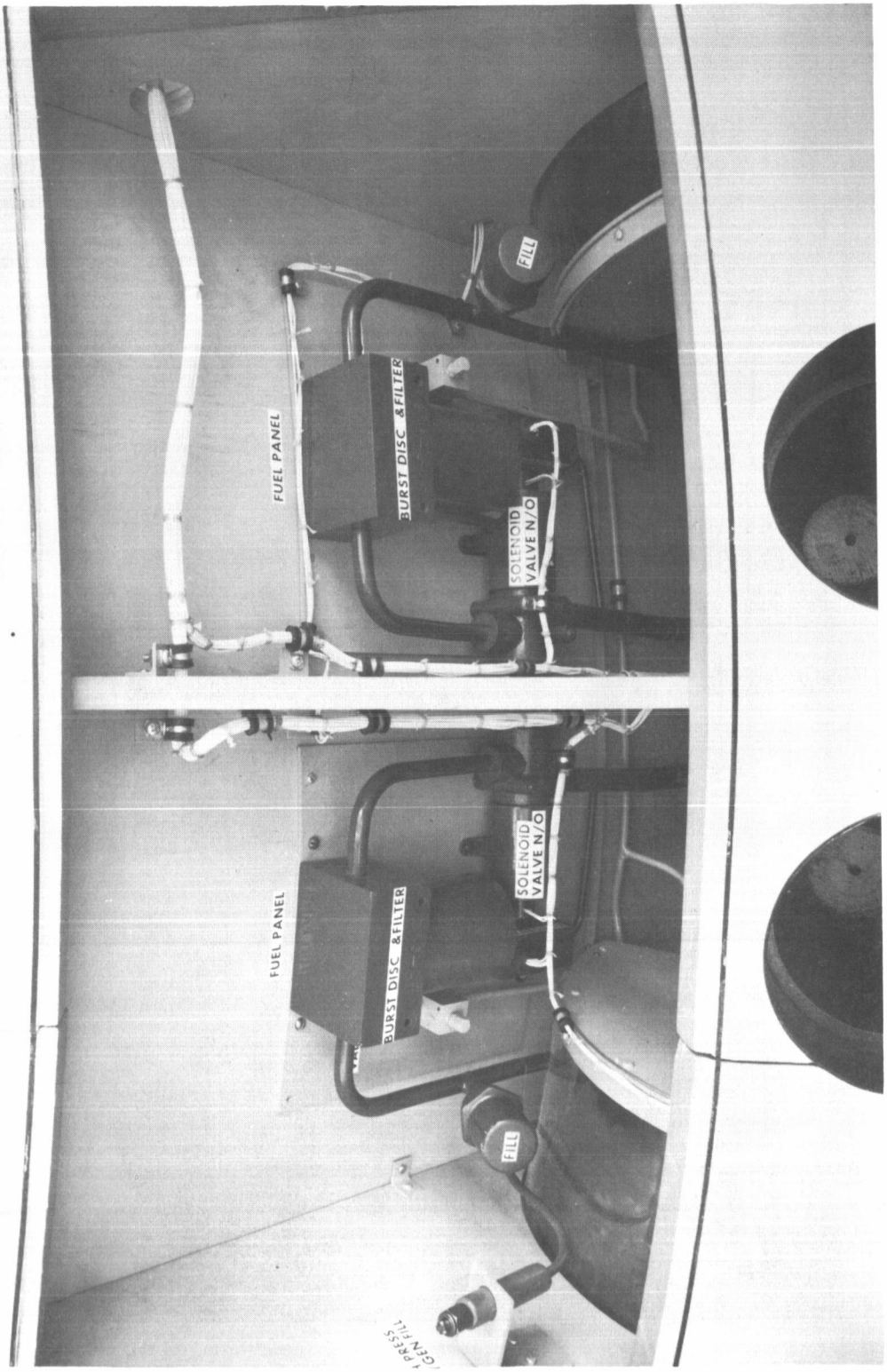

7005-04-66 O

CONFIDENTIAL

CONFIDENTIAL

7005-04-66 P

CONFIDENTIAL

CONFIDENTIAL

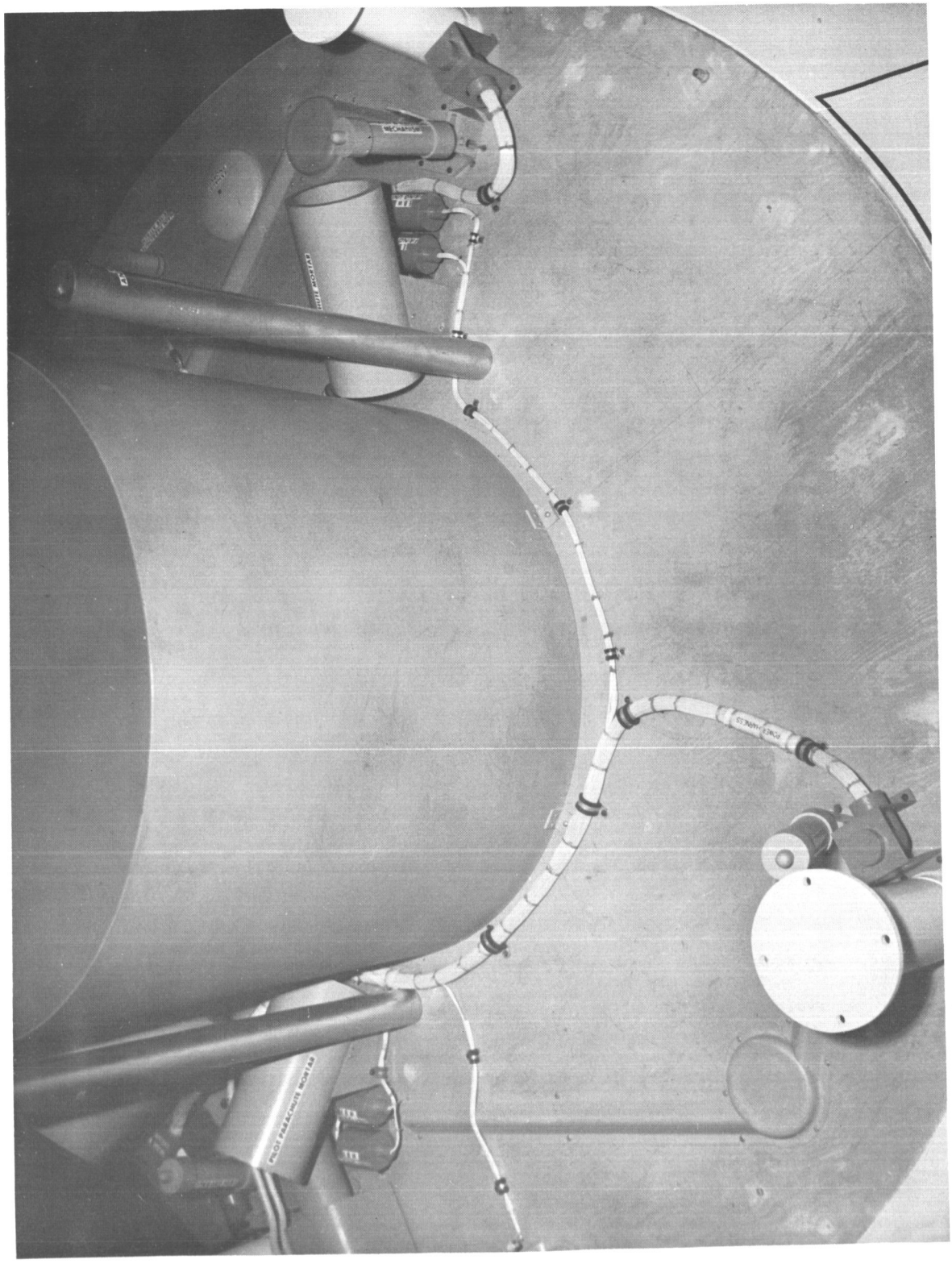

7005-04-66 Q

CONFIDENTIAL

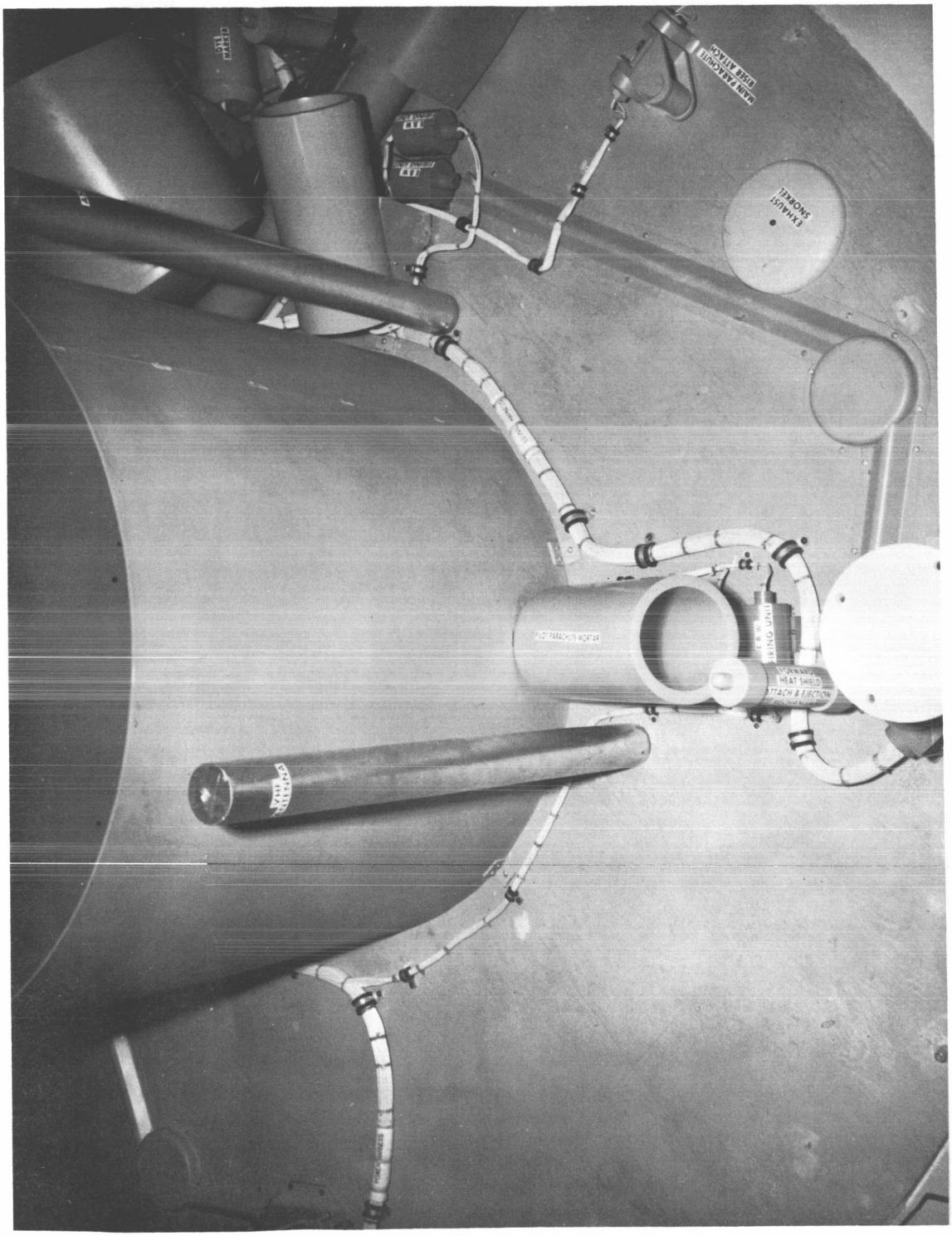

7005-04-66 R

CONFIDENTIAL

CONFIDENTIAL

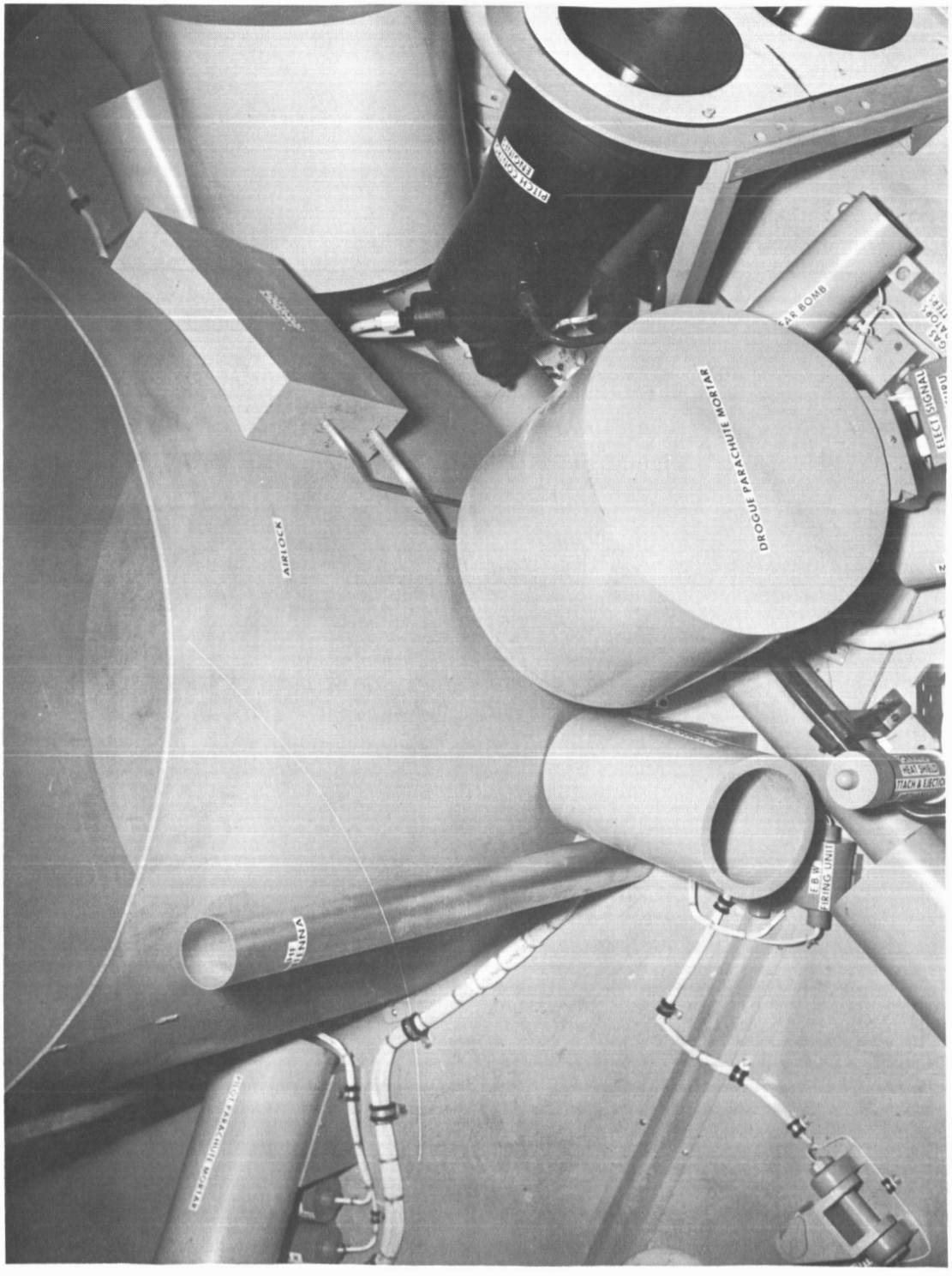

7005-04-66 S

CONFIDENTIAL